Map Lot 223-001 Account 169 Location 48 HORSING AROUND WAY Card 1 Of 2 11/30/2020

TRACY, DUSTIN
53 OLD COUNTY ROAD
HANCOCK ME 04640

B2824P854

Property Data

Neighborhood **56 Neighborhood 56**

Tree Growth Year **0**

TREE GROWTH RECERTIFY **0**

STATE SALE CODE **0**

Zone/Land Use **11 Residential**

Secondary Zone

Topography **9** **9**

1.Level	4.Below St	7.
2.Rolling	5.Low	8.
3.Above St	6.Swampy	9.

Utilities **9 None** **9 None**

1.Public	4.Dr Well	7.Cesspool
2.Water	5.Dug Well	8.
3.Sewer	6.Septic	9.None

Street **9 None**

1.Paved	4.Proposed	7.
2.Semi Imp	5.	8.
3.Gravel	6.	9.None

REVIEW STRUCTURE YEAR **0**

RENTAL? 0=NO 1=YES **0**

Sale Data

Sale Date

Price

Sale Type

1.Land	4.Mobile	7.
2.L & B	5.Other	8.
3.Building	6.	9.

Financing

1.Convent	4.Seller	7.
2.FHA/VA	5.Private	8.
3.Assumed	6.Cash	9.Unknown

Validity

1.Valid	4.Split	7.Changes
2.Related	5.Partial	8.Other
3.Distress	6.Exempt	9.Fr Ffclse

Verified

1.Buyer	4.Agent	7.Family
2.Seller	5.Pub Rec	8.Other
3.Lender	6.MLS	9.

Assessment Record

Year	Land	Buildings	Exempt	Total
2007	65,800	0	0	65,800
2008	112,500	0	0	112,500
2009	112,500	0	0	112,500
2010	112,500	0	0	112,500
2011	112,500	0	0	112,500
2012	125,000	30,800	0	155,800
2013	125,000	45,100	0	170,100
2014	41,100	30,100	0	71,200
2015	41,100	30,100	0	71,200
2018	52,000	30,100	0	82,100
2019	52,000	30,100	0	82,100
2020	52,000	30,100	0	82,100

Land Data

Front Foot	Type	Effective Frontage	Effective Depth	Influence Factor	Influence Code
11.Regular Lot				%	
12.Delta Triangle				%	
13.Nabla Triangle				%	
14.Rear Land				%	
15.Miscellaneous				%	
				%	
				%	
Square Foot		**Square Feet**			
16.Regular Lot				%	
17.Secondary Lot				%	
18.Excess Land				%	
19.Condominium				%	
20.Miscellaneous				%	
				%	
				%	
Fract. Acre		**Acreage/Sites**			
21.Homesite (Frac	24	2.70	100	%	0
22.Baselot (Fract	21	1.00	100	%	0
23.Misc (Fract)	44	2.00	100	%	0
Acres				%	
24.Excess Acres 1				%	
25.Excess Acres 5				%	
26.Excess Acres 2				%	
27.Excess Acres 5				%	
28.Excess Acres 1				%	
29.Excess acres				%	

Total Acreage 3.70

Influence Codes

1.Unimproved
2.Excess Frtg
3.Topography
4.Size/Shape
5.Access
6.Restriction
7.Corner Infl
8.Environment
9.Fract Share
Acres
30.Industrial Sit
31.Working Waterf
32.Cultivated Cro
33.Pasture
34.Softwood (Farm
35.Mixed Wood (Fa
36.Hardwood (Farm
37.Softwood
38.Mixed Wood
39.Hardwood
40.Wasteland
41.Gravel Pit
42.Mobile Home Si
43.Location Base
44.Lot Improvemen
45.Waterfront A
46.Lobster Pound

Inspection Witnessed By:

X Date

No./Date	Description	Date Insp.

Notes:

Hancock

Hancock

Map Lot 223-001 | Account 169 | Location 48 HORSING AROUND WAY | Card 1 Of 2 | 11/30/2020

Building Style		
0.Uncoded	4.Cape	8.Log
1.Conv.	5.Garrison	9.Other
2.Ranch	6.Colonial	10.Dutch C
3.R Ranch	7.Contemp	11.Farmhou

Dwelling Units

Other Units

Stories		
1.1	4.1.5	7.3.5
2.2	5.1.75	8.
3.3	6.2.5	9.

Exterior Walls		
0.Uncoded	4.Asbestos	8.Stone
1.Wood	5.Stucco	9.Other
2.Vin/Al	6.Brick Ve	10.Concret
3.Compos.	7.Solid Br	12.

Roof Surface		
1.Asphalt	4.Composit	7.
2.Slate	5.Wood	8.
3.Metal	6.Other	9.

SF Masonry Trim

OPEN-3-CUSTOM

OPEN-4-CUSTOM

Year Built

Year Remodeled

Foundation		
1.Concrete	4.Wood	7.
2.C Block	5.Slab	8.
3.Br/Stone	6.Piers	9.

Basement		
1.1/4 Bmt	4.Full Bmt	7.
2.1/2 Bmt	5.None	8.
3.3/4 Bmt	6.	9.None

Bsmt Gar # Cars

Wet Basement		
1.Dry	4.	7.
2.Damp	5.	8.
3.Wet	6.	9.

SF Bsmt Living

Fin Bsmt Grade

OPEN-5-CUSTOMIZE

Heat Type **100%**		
0.Uncoded	4.Steam	8.Fl/Wall
1.HWBB	5.FWA	9.No Heat
2.HWCI	6.GravWA	10.Radiabt
3.H Pump	7.Electric	12.

Cool Type **0%**		
1.Refrig	4.W&C Air	7.
2.Evapor	5.	8.
3.H Pump	6.	9.None

Kitchen Style		
1.Modern	4.Obsolete	7.
2.Typical	5.	8.
3.Old Type	6.	9.None

Bath(s) Style		
1.Modern	4.Obsolete	7.
2.Typical	5.	8.
3.Old Type	6.	9.None

Rooms

Bedrooms

Full Baths

Half Baths

Addn Fixtures

Fireplaces

TRIO Software
A Division of Harris Computer Systems

Layout		
1.Typical	4.	7.
2.Inadeq	5.	8.
3.Horrid	6.	9.

Attic		
1.1/4 Fin	4.Full Fin	7.
2.1/2 Fin	5.Fl/Stair	8.
3.3/4 Fin	6.	9.None

Insulation		
1.Full	4.Minimal	7.
2.Heavy	5.Partial	8.
3.Capped	6.	9.None

Unfinished %

Grade & Factor		
1.E Grade	4.B Grade	7.AAA Grad
2.D Grade	5.A Grade	8.SC Grade
3.C Grade	6.AA Grade	9.Same

SQFT (Footprint)

Condition		
1.Poor	4.Avg	7.V G
2.Fair	5.Avg+	8.Exc
3.Avg-	6.Good	9.Same

Phys. % Good

Funct. % Good

Functional Code		
1.Incomp	4.Delap	7.Seasonal
2.O-Built	5.Bsmt	8.
3.Fire	6.2014 ADJ	9.None

Econ. % Good

Economic Code		
0.None	3.No Power	7.
1.Location	4.Generate	8.
2.Encroach	9.None	9.

Entrance Code **0**		
1.Interior	4.Vacant	7.
2.Refusal	5.Estimate	8.
3.Informed	6.	9.

Information Code **0**		
1.Owner	4.Agent	7.
2.Relative	5.Estimate	8.
3.Tenant	6.Other	9.

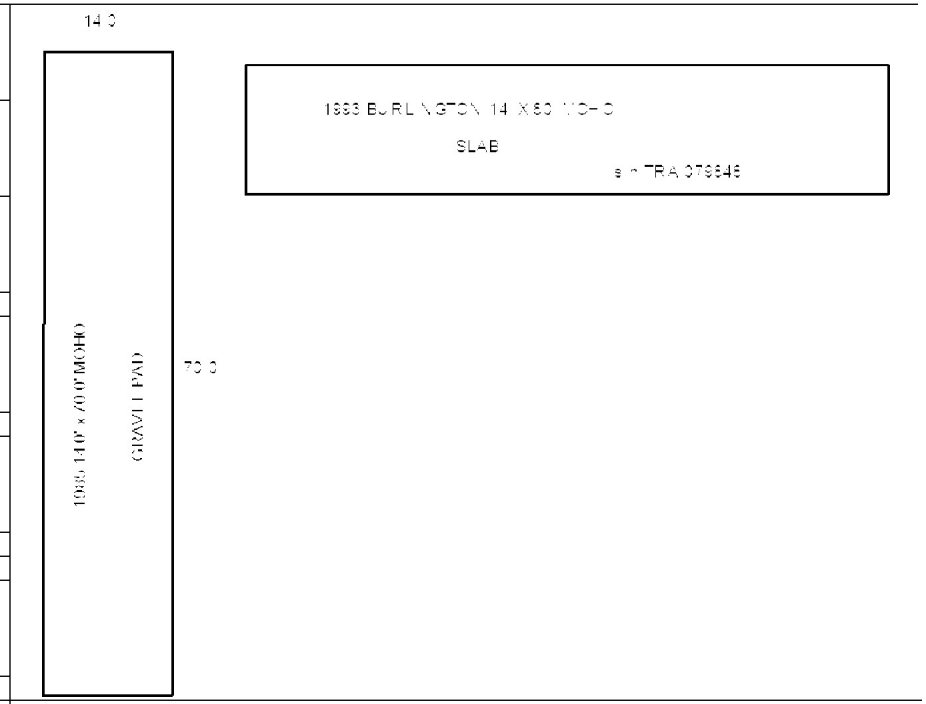

Date Inspected

Additions, Outbuildings & Improvements

Type	Year	Units	Grade	Cond	Phys.	Funct.	Sound Value
998 14 Mobile Home	1993	14x80	4 100	5	0 %	100 %	
					%	%	
					%	%	
					%	%	
					%	%	
					%	%	
					%	%	
					%	%	
					%	%	
					%	%	

1.One Story Fram
2.Two Story Fram
3.Three Story Fr
4.1 & 1/2 Story
5.1 & 3/4 Story
6.2 & 1/2 Story
21.Open Frame Por
22.Encl Frame Por
23.Frame Garage
24.Frame Shed
25.Frame Bay Wind
26.1SFr Overhang
27.Unfin Basement
28.Unfinished Att
29.Finished Attic

Map Lot 223-001 Account 169 Location 146 WASHINGTON JUNCTION ROAD Card 2 Of 2 11/30/2020

TRACY, DUSTIN
53 OLD COUNTY ROAD
HANCOCK ME 04640

B2824P854

Property Data

Neighborhood **56 Neighborhood 56**

Tree Growth Year **0**

TREE GROWTH RECERTIFY **0**

STATE SALE CODE **0**

Zone/Land Use **11 Residential**

Secondary Zone

Topography **9** **9**

1.Level 4.Below St 7.
2.Rolling 5.Low 8.
3.Above St 6.Swampy 9.

Utilities **9 None** **9 None**

1.Public 4.Dr Well 7.Cesspool
2.Water 5.Dug Well 8.
3.Sewer 6.Septic 9.None

Street **9 None**

1.Paved 4.Proposed 7.
2.Semi Imp 5. 8.
3.Gravel 6. 9.None

REVIEW STRUCTURE YEAR **0**

RENTAL? 0=NO 1=YES **0**

Sale Data

Sale Date

Price

Sale Type

1.Land 4.Mobile 7.
2.L & B 5.Other 8.
3.Building 6. 9.

Financing

1.Convent 4.Seller 7.
2.FHA/VA 5.Private 8.
3.Assumed 6.Cash 9.Unknown

Validity

1.Valid 4.Split 7.Changes
2.Related 5.Partial 8.Other
3.Distress 6.Exempt 9.Fr Ffclse

Verified

1.Buyer 4.Agent 7.Family
2.Seller 5.Pub Rec 8.Other
3.Lender 6.MLS 9.

Assessment Record

Year	Land	Buildings	Exempt	Total
2014	37,500	14,700	0	52,200
2015	37,500	14,700	0	52,200
2018	0	28,200	0	28,200
2019	0	28,200	0	28,200
2020	0	28,200	0	28,200

Land Data

Front Foot	Type	Effective Frontage	Effective Depth	Influence Factor	Influence Code
11.Regular Lot				%	
12.Delta Triangle				%	
13.Nabla Triangle				%	
14.Rear Land				%	
15.Miscellaneous				%	
				%	
				%	

Square Foot		Square Feet		
16.Regular Lot			%	
17.Secondary Lot			%	
18.Excess Land			%	
19.Condominium			%	
20.Miscellaneous			%	
			%	
			%	

Fract. Acre		Acreage/Sites		
21.Homesite (Frac			%	
22.Baselot (Fract			%	
23.Misc (Fract)			%	
Acres			%	
24.Excess Acres 1			%	
25.Excess Acres 5			%	
26.Excess Acres 2			%	
27.Excess Acres 5			%	
28.Excess Acres 1				
29.Excess acres				

Total Acreage 0.00

Influence Codes

1.Unimproved
2.Excess Frtg
3.Topography
4.Size/Shape
5.Access
6.Restriction
7.Corner Infl
8.Environment
9.Fract Share
Acres
30.Industrial Sit
31.Working Waterf
32.Cultivated Cro
33.Pasture
34.Softwood (Farm
35.Mixed Wood (Fa
36.Hardwood (Farm
37.Softwood
38.Mixed Wood
39.Hardwood
40.Wasteland
41.Gravel Pit
42.Mobile Home Si
43.Location Base
44.Lot Improvemen
45.Waterfront A
46.Lobster Pound

Inspection Witnessed By:

X Date

No./Date	Description	Date Insp.

Notes:

Hancock

Hancock

Map Lot 223-001 | Account 169 | Location 146 WASHINGTON JUNCTION ROAD | Card 2 Of 2 | 11/30/2020

Building Style		
0.Uncoded	4.Cape	8.Log
1.Conv.	5.Garrison	9.Other
2.Ranch	6.Colonial	10.Dutch C
3.R Ranch	7.Contemp	11.Farmhou

Dwelling Units
Other Units

Stories		
1.1	4.1.5	7.3.5
2.2	5.1.75	8.
3.3	6.2.5	9.

Exterior Walls		
0.Uncoded	4.Asbestos	8.Stone
1.Wood	5.Stucco	9.Other
2.Vin/Al	6.Brick Ve	10.Concret
3.Compos.	7.Solid Br	12.

Roof Surface		
1.Asphalt	4.Composit	7.
2.Slate	5.Wood	8.
3.Metal	6.Other	9.

SF Masonry Trim
OPEN-3-CUSTOM
OPEN-4-CUSTOM
Year Built
Year Remodeled

Foundation		
1.Concrete	4.Wood	7.
2.C Block	5.Slab	8.
3.Br/Stone	6.Piers	9.

Basement		
1.1/4 Bmt	4.Full Bmt	7.
2.1/2 Bmt	5.None	8.
3.3/4 Bmt	6.	9.None

Bsmt Gar # Cars

Wet Basement		
1.Dry	4.	7.
2.Damp	5.	8.
3.Wet	6.	9.

SF Bsmt Living
Fin Bsmt Grade
OPEN-5-CUSTOMIZE

Heat Type **100%**		
0.Uncoded	4.Steam	8.Fl/Wall
1.HWBB	5.FWA	9.No Heat
2.HWCI	6.GravWA	10.Radiabt
3.H Pump	7.Electric	12.

Cool Type **0%**		
1.Refrig	4.W&C Air	7.
2.Evapor	5.	8.
3.H Pump	6.	9.None

Kitchen Style		
1.Modern	4.Obsolete	7.
2.Typical	5.	8.
3.Old Type	6.	9.None

Bath(s) Style		
1.Modern	4.Obsolete	7.
2.Typical	5.	8.
3.Old Type	6.	9.None

Rooms
Bedrooms
Full Baths
Half Baths
Addn Fixtures
Fireplaces

TRIO Software
A Division of Harris Computer Systems

Layout		
1.Typical	4.	7.
2.Inadeq	5.	8.
3.Horrid	6.	9.

Attic		
1.1/4 Fin	4.Full Fin	7.
2.1/2 Fin	5.Fl/Stair	8.
3.3/4 Fin	6.	9.None

Insulation		
1.Full	4.Minimal	7.
2.Heavy	5.Partial	8.
3.Capped	6.	9.None

Unfinished %

Grade & Factor		
1.E Grade	4.B Grade	7.AAA Grad
2.D Grade	5.A Grade	8.SC Grade
3.C Grade	6.AA Grade	9.Same

SQFT (Footprint)

Condition		
1.Poor	4.Avg	7.V G
2.Fair	5.Avg+	8.Exc
3.Avg-	6.Good	9.Same

Phys. % Good
Funct. % Good

Functional Code		
1.Incomp	4.Delap	7.Seasonal
2.O-Built	5.Bsmt	8.
3.Fire	6.2014 ADJ	9.None

Econ. % Good

Economic Code		
0.None	3.No Power	7.
1.Location	4.Generate	8.
2.Encroach	9.None	9.

Entrance Code **0**		
1.Interior	4.Vacant	7.
2.Refusal	5.Estimate	8.
3.Informed	6.	9.

Information Code **0**		
1.Owner	4.Agent	7.
2.Relative	5.Estimate	8.
3.Tenant	6.Other	9.

14.0' x 70.0' MOHO ON GRAVEL PAD

14.0'

70.0'

Date Inspected

Additions, Outbuildings & Improvements

Type	Year	Units	Grade	Cond	Phys.	Funct.	Sound Value
998 14 Mobile Home	2000	14x70	3 100	5	0 %	100 %	
					%	%	
					%	%	
					%	%	
					%	%	
					%	%	
					%	%	
					%	%	
					%	%	
					%	%	

1.One Story Fram
2.Two Story Fram
3.Three Story Fr
4.1 & 1/2 Story
5.1 & 3/4 Story
6.2 & 1/2 Story
21.Open Frame Por
22.Encl Frame Por
23.Frame Garage
24.Frame Shed
25.Frame Bay Wind
26.1SFr Overhang
27.Unfin Basement
28.Unfinished Att
29.Finished Attic

Map Lot 223-001-001 Account 2227 Location 26 HORSING AROUND WAY Card 1 Of 2 11/30/2020

TRACY, DUSTIN
53 OLD COUNTY ROAD
HANCOCK ME 04640

B2824P854

Property Data

Neighborhood **56 Neighborhood 56**

Tree Growth Year **0**

TREE GROWTH RECERTIFY **0**

STATE SALE CODE **0**

Zone/Land Use **11 Residential**

Secondary Zone

Topography **9** **9**

1.Level 4.Below St 7.
2.Rolling 5.Low 8.
3.Above St 6.Swampy 9.

Utilities **9 None** **9 None**

1.Public 4.Dr Well 7.Cesspool
2.Water 5.Dug Well 8.
3.Sewer 6.Septic 9.None

Street **9 None**

1.Paved 4.Proposed 7.
2.Semi Imp 5. 8.
3.Gravel 6. 9.None

REVIEW STRUCTURE YEAR **0**

RENTAL? 0=NO 1=YES **0**

Sale Data

Sale Date

Price

Sale Type

1.Land 4.Mobile 7.
2.L & B 5.Other 8.
3.Building 6. 9.

Financing

1.Convent 4.Seller 7.
2.FHA/VA 5.Private 8.
3.Assumed 6.Cash 9.Unknown

Validity

1.Valid 4.Split 7.Changes
2.Related 5.Partial 8.Other
3.Distress 6.Exempt 9.Fr Ffclse

Verified

1.Buyer 4.Agent 7.Family
2.Seller 5.Pub Rec 8.Other
3.Lender 6.MLS 9.

Assessment Record

Year	Land	Buildings	Exempt	Total
2018	39,400	68,200	0	107,600
2019	39,400	68,200	0	107,600
2020	39,400	68,200	0	107,600

Land Data

Front Foot	Type	Effective Frontage	Effective Depth	Influence Factor	Influence Code
11.Regular Lot				%	
12.Delta Triangle				%	
13.Nabla Triangle				%	
14.Rear Land				%	
15.Miscellaneous				%	
				%	
				%	

Square Foot		Square Feet		
16.Regular Lot			%	
17.Secondary Lot			%	
18.Excess Land			%	
19.Condominium			%	
20.Miscellaneous			%	
			%	
			%	

Fract. Acre	Acreage/Sites			
21.Homesite (Frac	24	2.50	100 %	0
22.Baselot (Fract	21	1.00	100 %	0
23.Misc (Fract)	44	1.00	100 %	0
Acres			%	
24.Excess Acres 1			%	
25.Excess Acres 5			%	
26.Excess Acres 2			%	
27.Excess Acres 5			%	
28.Excess Acres 1				
29.Excess acres				

Total Acreage 3.50

Influence Codes

1.Unimproved
2.Excess Frtg
3.Topography
4.Size/Shape
5.Access
6.Restriction
7.Corner Infl
8.Environment
9.Fract Share
Acres
30.Industrial Sit
31.Working Waterf
32.Cultivated Cro
33.Pasture
34.Softwood (Farm
35.Mixed Wood (Fa
36.Hardwood (Farm
37.Softwood
38.Mixed Wood
39.Hardwood
40.Wasteland
41.Gravel Pit
42.Mobile Home Si
43.Location Base
44.Lot Improvemen
45.Waterfront A
46.Lobster Pound

Inspection Witnessed By:

X Date

No./Date	Description	Date Insp.

Notes:

Hancock

Hancock

Map Lot 223-001-001 | Account 2227 | Location 26 HORSING AROUND WAY | Card 1 Of 2 | 11/30/2020

Building Style		
0.Uncoded	4.Cape	8.Log
1.Conv.	5.Garrison	9.Other
2.Ranch	6.Colonial	10.Dutch C
3.R Ranch	7.Contemp	11.Farmhou

Dwelling Units
Other Units

Stories		
1.1	4.1.5	7.3.5
2.2	5.1.75	8.
3.3	6.2.5	9.

Exterior Walls		
0.Uncoded	4.Asbestos	8.Stone
1.Wood	5.Stucco	9.Other
2.Vin/Al	6.Brick Ve	10.Concret
3.Compos.	7.Solid Br	12.

Roof Surface		
1.Asphalt	4.Composit	7.
2.Slate	5.Wood	8.
3.Metal	6.Other	9.

SF Masonry Trim
OPEN-3-CUSTOM
OPEN-4-CUSTOM
Year Built
Year Remodeled

Foundation		
1.Concrete	4.Wood	7.
2.C Block	5.Slab	8.
3.Br/Stone	6.Piers	9.

Basement		
1.1/4 Bmt	4.Full Bmt	7.
2.1/2 Bmt	5.None	8.
3.3/4 Bmt	6.	9.None

Bsmt Gar # Cars

Wet Basement		
1.Dry	4.	7.
2.Damp	5.	8.
3.Wet	6.	9.

SF Bsmt Living
Fin Bsmt Grade
OPEN-5-CUSTOMIZE

Heat Type **100%**		
0.Uncoded	4.Steam	8.Fl/Wall
1.HWBB	5.FWA	9.No Heat
2.HWCI	6.GravWA	10.Radiabt
3.H Pump	7.Electric	12.

Cool Type **0%**		
1.Refrig	4.W&C Air	7.
2.Evapor	5.	8.
3.H Pump	6.	9.None

Kitchen Style		
1.Modern	4.Obsolete	7.
2.Typical	5.	8.
3.Old Type	6.	9.None

Bath(s) Style		
1.Modern	4.Obsolete	7.
2.Typical	5.	8.
3.Old Type	6.	9.None

Rooms
Bedrooms
Full Baths
Half Baths
Addn Fixtures
Fireplaces

TRIO Software
A Division of Harris Computer Systems

Layout		
1.Typical	4.	7.
2.Inadeq	5.	8.
3.Horrid	6.	9.

Attic		
1.1/4 Fin	4.Full Fin	7.
2.1/2 Fin	5.Fl/Stair	8.
3.3/4 Fin	6.	9.None

Insulation		
1.Full	4.Minimal	7.
2.Heavy	5.Partial	8.
3.Capped	6.	9.None

Unfinished %

Grade & Factor		
1.E Grade	4.B Grade	7.AAA Grad
2.D Grade	5.A Grade	8.SC Grade
3.C Grade	6.AA Grade	9.Same

SQFT (Footprint)

Condition		
1.Poor	4.Avg	7.V G
2.Fair	5.Avg+	8.Exc
3.Avg-	6.Good	9.Same

Phys. % Good
Funct. % Good

Functional Code		
1.Incomp	4.Delap	7.Seasonal
2.O-Built	5.Bsmt	8.
3.Fire	6.2014 ADJ	9.None

Econ. % Good

Economic Code		
0.None	3.No Power	7.
1.Location	4.Generate	8.
2.Encroach	9.None	9.

Entrance Code **0**		
1.Interior	4.Vacant	7.
2.Refusal	5.Estimate	8.
3.Informed	6.	9.

Information Code **0**		
1.Owner	4.Agent	7.
2.Relative	5.Estimate	8.
3.Tenant	6.Other	9.

Date Inspected

Additions, Outbuildings & Improvements

Type	Year	Units	Grade	Cond	Phys.	Funct.	Sound Value
994 Double Wide	2017	28x60	3 100	4	0 %	100 %	
24 Frame Shed	2017	80	3 100	4	0 %	100 %	
24 Frame Shed	2017	100	3 100	4	0 %	100 %	
67 Barn	2017	900	3 100	4	0 %	100 %	
					%	%	
					%	%	
					%	%	
					%	%	
					%	%	
					%	%	

1.One Story Fram
2.Two Story Fram
3.Three Story Fr
4.1 & 1/2 Story
5.1 & 3/4 Story
6.2 & 1/2 Story
21.Open Frame Por
22.Encl Frame Por
23.Frame Garage
24.Frame Shed
25.Frame Bay Wind
26.1SFr Overhang
27.Unfin Basement
28.Unfinished Att
29.Finished Attic

Map Lot 223-001-001 Account 2227 Location 42 HORSING AROUND WAY Card 2 Of 2 11/30/2020

TRACY, DUSTIN
53 OLD COUNTY ROAD
HANCOCK ME 04640

B2824P854

Property Data

Neighborhood **56 Neighborhood 56**

Tree Growth Year **0**

TREE GROWTH RECERTIFY **0**

STATE SALE CODE **0**

Zone/Land Use **11 Residential**

Secondary Zone

Topography **9** **9**

1.Level	4.Below St	7.
2.Rolling	5.Low	8.
3.Above St	6.Swampy	9.

Utilities **9 None** **9 None**

1.Public	4.Dr Well	7.Cesspool
2.Water	5.Dug Well	8.
3.Sewer	6.Septic	9.None

Street **9 None**

1.Paved	4.Proposed	7.
2.Semi Imp	5.	8.
3.Gravel	6.	9.None

REVIEW STRUCTURE YEAR **0**

RENTAL? 0=NO 1=YES **0**

Sale Data

Sale Date

Price

Sale Type

1.Land	4.Mobile	7.
2.L & B	5.Other	8.
3.Building	6.	9.

Financing

1.Convent	4.Seller	7.
2.FHA/VA	5.Private	8.
3.Assumed	6.Cash	9.Unknown

Validity

1.Valid	4.Split	7.Changes
2.Related	5.Partial	8.Other
3.Distress	6.Exempt	9.Fr Ffclse

Verified

1.Buyer	4.Agent	7.Family
2.Seller	5.Pub Rec	8.Other
3.Lender	6.MLS	9.

Assessment Record

Year	Land	Buildings	Exempt	Total
2018	0	14,700	0	14,700
2019	0	14,700	0	14,700
2020	0	14,700	0	14,700

Land Data

Front Foot	Type	Effective Frontage	Effective Depth	Influence Factor	Influence Code
11.Regular Lot				%	
12.Delta Triangle				%	
13.Nabla Triangle				%	
14.Rear Land				%	
15.Miscellaneous				%	
				%	
				%	

Square Foot		Square Feet		
16.Regular Lot			%	
17.Secondary Lot			%	
18.Excess Land			%	
19.Condominium			%	
20.Miscellaneous			%	
			%	
			%	

Fract. Acre		Acreage/Sites		
21.Homesite (Frac			%	
22.Baselot (Fract			%	
23.Misc (Fract)			%	
Acres			%	
24.Excess Acres 1			%	
25.Excess Acres 5			%	
26.Excess Acres 2			%	
27.Excess Acres 5			%	
28.Excess Acres 1				
29.Excess acres				

Total Acreage 0.00

Influence Codes

1.Unimproved
2.Excess Frtg
3.Topography
4.Size/Shape
5.Access
6.Restriction
7.Corner Infl
8.Environment
9.Fract Share
Acres
30.Industrial Sit
31.Working Waterf
32.Cultivated Cro
33.Pasture
34.Softwood (Farm
35.Mixed Wood (Fa
36.Hardwood (Farm
37.Softwood
38.Mixed Wood
39.Hardwood
40.Wasteland
41.Gravel Pit
42.Mobile Home Si
43.Location Base
44.Lot Improvemen
45.Waterfront A
46.Lobster Pound

Inspection Witnessed By:

X Date

No./Date	Description	Date Insp.

Notes:

Hancock

Hancock

Map Lot 223-001-001 | Account 2227 | Location 42 HORSING AROUND WAY | Card 2 Of 2 | 11/30/2020

Building Style		
0.Uncoded	4.Cape	8.Log
1.Conv.	5.Garrison	9.Other
2.Ranch	6.Colonial	10.Dutch C
3.R Ranch	7.Contemp	11.Farmhou

Dwelling Units
Other Units

Stories		
1.1	4.1.5	7.3.5
2.2	5.1.75	8.
3.3	6.2.5	9.

Exterior Walls		
0.Uncoded	4.Asbestos	8.Stone
1.Wood	5.Stucco	9.Other
2.Vin/Al	6.Brick Ve	10.Concret
3.Compos.	7.Solid Br	12.

Roof Surface		
1.Asphalt	4.Composit	7.
2.Slate	5.Wood	8.
3.Metal	6.Other	9.

SF Masonry Trim
OPEN-3-CUSTOM
OPEN-4-CUSTOM
Year Built
Year Remodeled

Foundation		
1.Concrete	4.Wood	7.
2.C Block	5.Slab	8.
3.Br/Stone	6.Piers	9.

Basement		
1.1/4 Bmt	4.Full Bmt	7.
2.1/2 Bmt	5.None	8.
3.3/4 Bmt	6.	9.None

Bsmt Gar # Cars

Wet Basement		
1.Dry	4.	7.
2.Damp	5.	8.
3.Wet	6.	9.

SF Bsmt Living
Fin Bsmt Grade
OPEN-5-CUSTOMIZE

Heat Type **100%**		
0.Uncoded	4.Steam	8.Fl/Wall
1.HWBB	5.FWA	9.No Heat
2.HWCI	6.GravWA	10.Radiabt
3.H Pump	7.Electric	12.

Cool Type **0%**		
1.Refrig	4.W&C Air	7.
2.Evapor	5.	8.
3.H Pump	6.	9.None

Kitchen Style		
1.Modern	4.Obsolete	7.
2.Typical	5.	8.
3.Old Type	6.	9.None

Bath(s) Style		
1.Modern	4.Obsolete	7.
2.Typical	5.	8.
3.Old Type	6.	9.None

Rooms
Bedrooms
Full Baths
Half Baths
Addn Fixtures
Fireplaces

TRIO Software
A Division of Harris Computer Systems

Layout		
1.Typical	4.	7.
2.Inadeq	5.	8.
3.Horrid	6.	9.

Attic		
1.1/4 Fin	4.Full Fin	7.
2.1/2 Fin	5.Fl/Stair	8.
3.3/4 Fin	6.	9.None

Insulation		
1.Full	4.Minimal	7.
2.Heavy	5.Partial	8.
3.Capped	6.	9.None

Unfinished %
Grade & Factor

1.E Grade	4.B Grade	7.AAA Grad
2.D Grade	5.A Grade	8.SC Grade
3.C Grade	6.AA Grade	9.Same

SQFT (Footprint)

Condition		
1.Poor	4.Avg	7.V G
2.Fair	5.Avg+	8.Exc
3.Avg-	6.Good	9.Same

Phys. % Good
Funct. % Good

Functional Code		
1.Incomp	4.Delap	7.Seasonal
2.O-Built	5.Bsmt	8.
3.Fire	6.2014 ADJ	9.None

Econ. % Good

Economic Code		
0.None	3.No Power	7.
1.Location	4.Generate	8.
2.Encroach	9.None	9.

Entrance Code **0**		
1.Interior	4.Vacant	7.
2.Refusal	5.Estimate	8.
3.Informed	6.	9.

Information Code **0**		
1.Owner	4.Agent	7.
2.Relative	5.Estimate	8.
3.Tenant	6.Other	9.

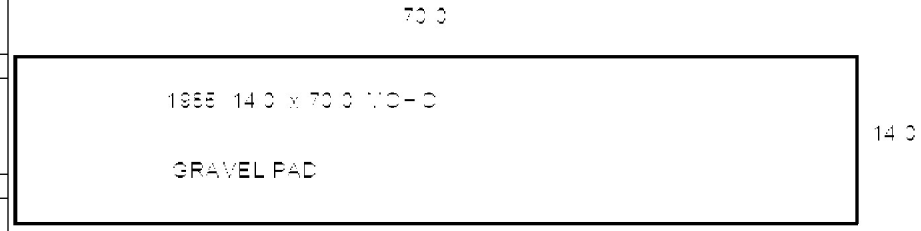

Date Inspected

Additions, Outbuildings & Improvements

Type	Year	Units	Grade	Cond	Phys.	Funct.	Sound Value
998 14 Mobile Home	1985	14x70	3 100	5	0 %	80 %	
					%	%	
					%	%	
					%	%	
					%	%	
					%	%	
					%	%	
					%	%	
					%	%	
					%	%	

1.One Story Fram
2.Two Story Fram
3.Three Story Fr
4.1 & 1/2 Story
5.1 & 3/4 Story
6.2 & 1/2 Story
21.Open Frame Por
22.Encl Frame Por
23.Frame Garage
24.Frame Shed
25.Frame Bay Wind
26.1SFr Overhang
27.Unfin Basement
28.Unfinished Att
29.Finished Attic

Map Lot 223-002 Account 373 Location 154 WASHINGTON JUNCTION ROAD Card 1 Of 1 11/30/2020

DONALDSON, FRANK
154 WASHINGTON JUNCTION ROAD
HANCOCK ME 04640

B1492P465

Inspection Witnessed By:

X Date

No./Date	Description	Date Insp.

Notes:

Hancock

Property Data

Neighborhood **56 Neighborhood 56**

Tree Growth Year **0**

TREE GROWTH RECERTIFY **0**

STATE SALE CODE **0**

Zone/Land Use **11 Residential**

Secondary Zone

Topography **9** **9**

1.Level 4.Below St 7.
2.Rolling 5.Low 8.
3.Above St 6.Swampy 9.

Utilities **9 None** **9 None**

1.Public 4.Dr Well 7.Cesspool
2.Water 5.Dug Well 8.
3.Sewer 6.Septic 9.None

Street **1 Paved**

1.Paved 4.Proposed 7.
2.Semi Imp 5. 8.
3.Gravel 6. 9.None

REVIEW STRUCTURE YEAR **2008**

RENTAL? 0=NO 1=YES **1**

Sale Data

Sale Date

Price

Sale Type

1.Land 4.Mobile 7.
2.L & B 5.Other 8.
3.Building 6. 9.

Financing

1.Convent 4.Seller 7.
2.FHA/VA 5.Private 8.
3.Assumed 6.Cash 9.Unknown

Validity

1.Valid 4.Split 7.Changes
2.Related 5.Partial 8.Other
3.Distress 6.Exempt 9.Fr Ffclse

Verified

1.Buyer 4.Agent 7.Family
2.Seller 5.Pub Rec 8.Other
3.Lender 6.MLS 9.

Assessment Record

Year	Land	Buildings	Exempt	Total
2007	38,100	116,900	13,000	142,000
2008	38,100	119,000	13,000	144,100
2009	38,100	119,000	13,000	144,100
2010	38,100	119,000	10,000	147,100
2011	38,100	119,000	10,000	147,100
2012	38,100	119,000	10,000	147,100
2013	38,100	119,000	10,000	147,100
2014	38,100	113,000	10,800	140,300
2015	38,100	113,000	11,000	140,100
2016	38,100	113,000	16,500	134,600
2017	38,100	111,400	22,000	127,500
2018	38,100	111,400	22,000	127,500
2019	38,100	111,400	22,000	127,500
2020	38,100	111,400	25,000	124,500

Land Data

Front Foot	Type	Effective Frontage	Effective Depth	Influence Factor	Influence Code
11.Regular Lot				%	
12.Delta Triangle				%	
13.Nabla Triangle				%	
14.Rear Land				%	
15.Miscellaneous				%	
				%	
				%	
Square Foot		**Square Feet**			
16.Regular Lot				%	
17.Secondary Lot				%	
18.Excess Land				%	
19.Condominium				%	
20.Miscellaneous				%	
				%	
				%	
Fract. Acre		**Acreage/Sites**			
21.Homesite (Frac	21	1.00	100	%	0
22.Baselot (Fract	26	0.50	100	%	0
23.Misc (Fract)	44	1.00	100	%	0
Acres				%	
24.Excess Acres 1				%	
25.Excess Acres 5				%	
26.Excess Acres 2				%	
27.Excess Acres 5				%	
28.Excess Acres 1				%	
29.Excess acres				%	

Total Acreage 1.50

Influence Codes

1.Unimproved
2.Excess Frtg
3.Topography
4.Size/Shape
5.Access
6.Restriction
7.Corner Infl
8.Environment
9.Fract Share
Acres
30.Industrial Sit
31.Working Waterf
32.Cultivated Cro
33.Pasture
34.Softwood (Farm
35.Mixed Wood (Fa
36.Hardwood (Farm
37.Softwood
38.Mixed Wood
39.Hardwood
40.Wasteland
41.Gravel Pit
42.Mobile Home Si
43.Location Base
44.Lot Improvemen
45.Waterfront A
46.Lobster Pound

Hancock

Map Lot 223-002 | Account 373 | Location 154 WASHINGTON JUNCTION ROAD | Card 1 Of 1 | 11/30/2020

Building Style	**1 Conventional**		
0.Uncoded	4.Cape	8.Log	
1.Conv.	5.Garrison	9.Other	
2.Ranch	6.Colonial	10.Dutch C	
3.R Ranch	7.Contemp	11.Farmhou	
Dwelling Units	**1**		
Other Units	**0**		
Stories	**1 One Story**		
1.1	4.1.5	7.3.5	
2.2	5.1.75	8.	
3.3	6.2.5	9.	
Exterior Walls	**1 Wood Siding**		
0.Uncoded	4.Asbestos	8.Stone	
1.Wood	5.Stucco	9.Other	
2.Vin/Al	6.Brick Ve	10.Concret	
3.Compos.	7.Solid Br	12.	
Roof Surface	**1 Asphalt Shingles**		
1.Asphalt	4.Composit	7.	
2.Slate	5.Wood	8.	
3.Metal	6.Other	9.	
SF Masonry Trim	**0**		
OPEN-3-CUSTOM	**0**		
OPEN-4-CUSTOM	**0**		
Year Built	**1960**		
Year Remodeled	**0**		
Foundation	**1 Concrete**		
1.Concrete	4.Wood	7.	
2.C Block	5.Slab	8.	
3.Br/Stone	6.Piers	9.	
Basement	**1 1/4 Basement**		
1.1/4 Bmt	4.Full Bmt	7.	
2.1/2 Bmt	5.None	8.	
3.3/4 Bmt	6.	9.None	
Bsmt Gar # Cars	**0**		
Wet Basement	**1 Dry Basement**		
1.Dry	4.	7.	
2.Damp	5.	8.	
3.Wet	6.	9.	

SF Bsmt Living	**0**		
Fin Bsmt Grade	**0 0**		
OPEN-5-CUSTOMIZE	**0**		
Heat Type	**100%**	**5 Forced Warm Air**	
0.Uncoded	4.Steam	8.Fl/Wall	
1.HWBB	5.FWA	9.No Heat	
2.HWCI	6.GravWA	10.Radiabt	
3.H Pump	7.Electric	12.	
Cool Type	**100%**	**9 None**	
1.Refrig	4.W&C Air	7.	
2.Evapor	5.	8.	
3.H Pump	6.	9.None	
Kitchen Style	**2 Typical**		
1.Modern	4.Obsolete	7.	
2.Typical	5.	8.	
3.Old Type	6.	9.None	
Bath(s) Style	**2 Typical Bath(s)**		
1.Modern	4.Obsolete	7.	
2.Typical	5.	8.	
3.Old Type	6.	9.None	
# Rooms	**4**		
# Bedrooms	**2**		
# Full Baths	**1**		
# Half Baths	**0**		
# Addn Fixtures	**0**		
# Fireplaces	**1**		

TRIO Software
A Division of Harris Computer Systems

Layout	**1 Typical**		
1.Typical	4.	7.	
2.Inadeq	5.	8.	
3.Horrid	6.	9.	
Attic	**9 None**		
1.1/4 Fin	4.Full Fin	7.	
2.1/2 Fin	5.Fl/Stair	8.	
3.3/4 Fin	6.	9.None	
Insulation	**1 Full**		
1.Full	4.Minimal	7.	
2.Heavy	5.Partial	8.	
3.Capped	6.	9.None	
Unfinished %	**0%**		
Grade & Factor	**3 Average 105%**		
1.E Grade	4.B Grade	7.AAA Grad	
2.D Grade	5.A Grade	8.SC Grade	
3.C Grade	6.AA Grade	9.Same	
SQFT (Footprint)	**1208**		
Condition	**4 Average**		
1.Poor	4.Avg	7.V G	
2.Fair	5.Avg+	8.Exc	
3.Avg-	6.Good	9.Same	
Phys. % Good	**0%**		
Funct. % Good	**95%**		
Functional Code	**6 2014 ADJUSTMENT**		
1.Incomp	4.Delap	7.Seasonal	
2.O-Built	5.Bsmt	8.	
3.Fire	6.2014 ADJ	9.None	
Econ. % Good	**100%**		
Economic Code	**None**		
0.None	3.No Power	7.	
1.Location	4.Generate	8.	
2.Encroach	9.None	9.	
Entrance Code	**0**		
1.Interior	4.Vacant	7.	
2.Refusal	5.Estimate	8.	
3.Informed	6.	9.	
Information Code	**0**		
1.Owner	4.Agent	7.	
2.Relative	5.Estimate	8.	
3.Tenant	6.Other	9.	

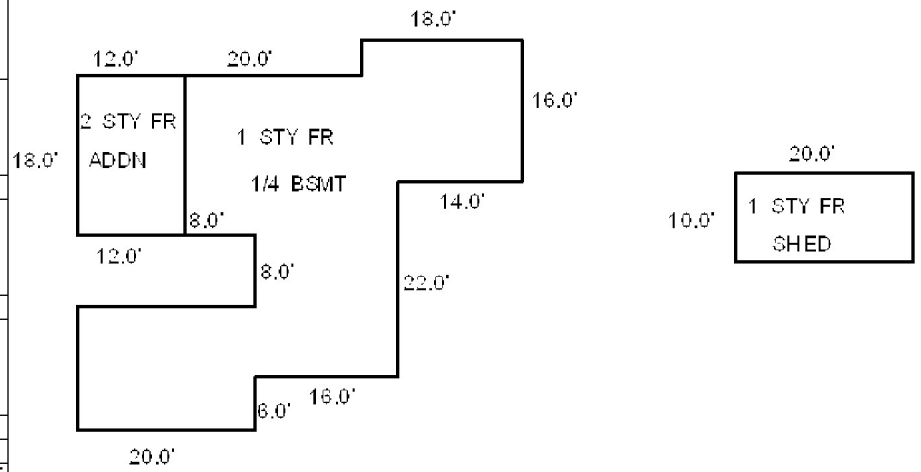

Date Inspected

Additions, Outbuildings & Improvements

Type	Year	Units	Grade	Cond	Phys.	Funct.	Sound Value
2 Two Story Frame	0	216	0 0	0	0 %	0 %	
24 Frame Shed	0	200	0 0	0	0 %	0 %	
					%	%	
					%	%	
					%	%	
					%	%	
					%	%	
					%	%	
					%	%	
					%	%	

1.One Story Fram
2.Two Story Fram
3.Three Story Fr
4.1 & 1/2 Story
5.1 & 3/4 Story
6.2 & 1/2 Story
21.Open Frame Por
22.Encl Frame Por
23.Frame Garage
24.Frame Shed
25.Frame Bay Wind
26.1SFr Overhang
27.Unfin Basement
28.Unfinished Att
29.Finished Attic

Map Lot 223-003 Account 1250 Location 170 WASHINGTON JUNCTION ROAD Card 1 Of 1 11/30/2020

DORR, ELMA L
13342 LOUISVILLE
HOUSTON TX 77015

B3811P154

Property Data

Neighborhood	**56 Neighborhood 56**
Tree Growth Year	**0**
TREE GROWTH RECERTIFY	**0**
STATE SALE CODE	**0**
Zone/Land Use	**11 Residential**
Secondary Zone	

Topography

1.Level	4.Below St	7.
2.Rolling	5.Low	8.
3.Above St	6.Swampy	9.

Utilities

1.Public	4.Dr Well	7.Cesspool
2.Water	5.Dug Well	8.
3.Sewer	6.Septic	9.None

Street **1 Paved**

1.Paved	4.Proposed	7.
2.Semi Imp	5.	8.
3.Gravel	6.	9.None

REVIEW STRUCTURE YEAR	**0**
RENTAL? 0=NO 1=YES	**0**

Sale Data

Sale Date	**12/18/2003**
Price	**132,000**

Sale Type **2 Land & Buildings**

1.Land	4.Mobile	7.
2.L & B	5.Other	8.
3.Building	6.	9.

Financing **9 Unknown**

1.Convent	4.Seller	7.
2.FHA/VA	5.Private	8.
3.Assumed	6.Cash	9.Unknown

Validity **1 Arms Length Sale**

1.Valid	4.Split	7.Changes
2.Related	5.Partial	8.Other
3.Distress	6.Exempt	9.Fr Ffclse

Verified **5 Public Record**

1.Buyer	4.Agent	7.Family
2.Seller	5.Pub Rec	8.Other
3.Lender	6.MLS	9.

Assessment Record

Year	Land	Buildings	Exempt	Total
2007	40,900	113,600	0	154,500
2008	40,900	113,600	0	154,500
2009	40,900	113,600	0	154,500
2010	40,900	113,600	0	154,500
2011	40,900	113,600	0	154,500
2012	40,900	113,600	10,000	144,500
2013	40,900	113,600	10,000	144,500
2014	40,900	107,900	10,800	138,000
2015	40,900	107,900	11,000	137,800
2016	40,900	107,900	16,500	132,300
2017	40,900	106,300	22,000	125,200
2018	40,900	106,300	22,000	125,200
2019	40,900	106,300	22,000	125,200
2020	40,900	106,300	25,000	122,200

Land Data

Front Foot	Type	Effective Frontage	Effective Depth	Influence Factor	Influence Code
11.Regular Lot				%	
12.Delta Triangle				%	
13.Nabla Triangle				%	
14.Rear Land				%	
15.Miscellaneous				%	
				%	
				%	
Square Foot		**Square Feet**			
16.Regular Lot				%	
17.Secondary Lot				%	
18.Excess Land				%	
19.Condominium				%	
20.Miscellaneous				%	
				%	
				%	
Fract. Acre		**Acreage/Sites**			
21.Homesite (Frac	21	1.00	100	%	0
22.Baselot (Fract	26	2.70	100	%	0
23.Misc (Fract)	44	1.00	100	%	0
Acres				%	
24.Excess Acres 1				%	
25.Excess Acres 5				%	
26.Excess Acres 2				%	
27.Excess Acres 5				%	
28.Excess Acres 1				%	
29.Excess acres				%	

Total Acreage 3.70

Influence Codes

1.Unimproved
2.Excess Frtg
3.Topography
4.Size/Shape
5.Access
6.Restriction
7.Corner Infl
8.Environment
9.Fract Share
Acres
30.Industrial Sit
31.Working Waterf
32.Cultivated Cro
33.Pasture
34.Softwood (Farm
35.Mixed Wood (Fa
36.Hardwood (Farm
37.Softwood
38.Mixed Wood
39.Hardwood
40.Wasteland
41.Gravel Pit
42.Mobile Home Si
43.Location Base
44.Lot Improvemen
45.Waterfront A
46.Lobster Pound

Inspection Witnessed By:

X Date

No./Date	Description	Date Insp.

Notes:

Hancock

Hancock

Map Lot 223-003 | Account 1250 | Location 170 WASHINGTON JUNCTION ROAD | Card 1 Of 1 | 11/30/2020

Building Style	**2 Ranch**	
0.Uncoded	4.Cape	8.Log
1.Conv.	5.Garrison	9.Other
2.Ranch	6.Colonial	10.Dutch C
3.R Ranch	7.Contemp	11.Farmhou
Dwelling Units	**1**	
Other Units	**0**	
Stories	**1 One Story**	
1.1	4.1.5	7.3.5
2.2	5.1.75	8.
3.3	6.2.5	9.
Exterior Walls	**2 Vinyl/Aluminum**	
0.Uncoded	4.Asbestos	8.Stone
1.Wood	5.Stucco	9.Other
2.Vin/Al	6.Brick Ve	10.Concret
3.Compos.	7.Solid Br	12.
Roof Surface	**1 Asphalt Shingles**	
1.Asphalt	4.Composit	7.
2.Slate	5.Wood	8.
3.Metal	6.Other	9.
SF Masonry Trim	**0**	
OPEN-3-CUSTOM	**0**	
OPEN-4-CUSTOM	**0**	
Year Built	**1978**	
Year Remodeled	**0**	
Foundation	**1 Concrete**	
1.Concrete	4.Wood	7.
2.C Block	5.Slab	8.
3.Br/Stone	6.Piers	9.
Basement	**4 Full Basement**	
1.1/4 Bmt	4.Full Bmt	7.
2.1/2 Bmt	5.None	8.
3.3/4 Bmt	6.	9.None
Bsmt Gar # Cars	**0**	
Wet Basement	**1 Dry Basement**	
1.Dry	4.	7.
2.Damp	5.	8.
3.Wet	6.	9.

SF Bsmt Living	**0**	
Fin Bsmt Grade	**0 0**	
OPEN-5-CUSTOMIZE	**0**	
Heat Type	**100%**	**1 Hot Water BB**
0.Uncoded	4.Steam	8.Fl/Wall
1.HWBB	5.FWA	9.No Heat
2.HWCI	6.GravWA	10.Radiabt
3.H Pump	7.Electric	12.
Cool Type	**100%**	**9 None**
1.Refrig	4.W&C Air	7.
2.Evapor	5.	8.
3.H Pump	6.	9.None
Kitchen Style	**2 Typical**	
1.Modern	4.Obsolete	7.
2.Typical	5.	8.
3.Old Type	6.	9.None
Bath(s) Style	**2 Typical Bath(s)**	
1.Modern	4.Obsolete	7.
2.Typical	5.	8.
3.Old Type	6.	9.None
# Rooms	**5**	
# Bedrooms	**2**	
# Full Baths	**1**	
# Half Baths	**0**	
# Addn Fixtures	**0**	
# Fireplaces	**0**	

TRIO Software
A Division of Harris Computer Systems

Layout	**1 Typical**	
1.Typical	4.	7.
2.Inadeq	5.	8.
3.Horrid	6.	9.
Attic	**9 None**	
1.1/4 Fin	4.Full Fin	7.
2.1/2 Fin	5.Fl/Stair	8.
3.3/4 Fin	6.	9.None
Insulation	**1 Full**	
1.Full	4.Minimal	7.
2.Heavy	5.Partial	8.
3.Capped	6.	9.None
Unfinished %	**0%**	
Grade & Factor	**3 Average 100%**	
1.E Grade	4.B Grade	7.AAA Grad
2.D Grade	5.A Grade	8.SC Grade
3.C Grade	6.AA Grade	9.Same
SQFT (Footprint)	**1392**	
Condition	**3 Below Average**	
1.Poor	4.Avg	7.V G
2.Fair	5.Avg+	8.Exc
3.Avg-	6.Good	9.Same
Phys. % Good	**0%**	
Funct. % Good	**95%**	
Functional Code	**6 2014 ADJUSTMENT**	
1.Incomp	4.Delap	7.Seasonal
2.O-Built	5.Bsmt	8.
3.Fire	6.2014 ADJ	9.None
Econ. % Good	**100%**	
Economic Code	**None**	
0.None	3.No Power	7.
1.Location	4.Generate	8.
2.Encroach	9.None	9.
Entrance Code	**0**	
1.Interior	4.Vacant	7.
2.Refusal	5.Estimate	8.
3.Informed	6.	9.
Information Code	**0**	
1.Owner	4.Agent	7.
2.Relative	5.Estimate	8.
3.Tenant	6.Other	9.

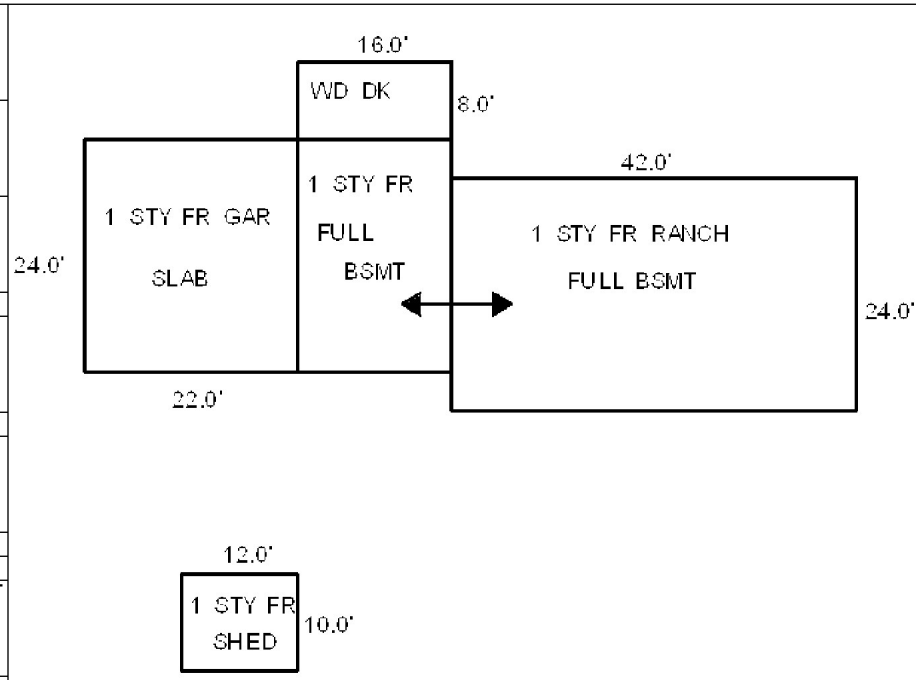

Date Inspected

Additions, Outbuildings & Improvements

Type	Year	Units	Grade	Cond	Phys.	Funct.	Sound Value
81 1 SF GARAGE	0	528	0 0	0	0 %	0 %	
24 Frame Shed	0	120	0 0	0	0 %	0 %	
68 Wood Deck	0	128	0 0	0	0 %	0 %	
					%	%	
					%	%	
					%	%	
					%	%	
					%	%	
					%	%	
					%	%	

1.One Story Fram
2.Two Story Fram
3.Three Story Fr
4.1 & 1/2 Story
5.1 & 3/4 Story
6.2 & 1/2 Story
21.Open Frame Por
22.Encl Frame Por
23.Frame Garage
24.Frame Shed
25.Frame Bay Wind
26.1SFr Overhang
27.Unfin Basement
28.Unfinished Att
29.Finished Attic

Map Lot 223-004 | Account 95 | Location 178 WASHINGTON JUNCTION ROAD | Card 1 Of 1 | 11/30/2020

PREBLE, SPENCER W
184 WASHINGTON JUNCTION ROAD
HANCOCK ME 04640

B4025P79

Previous Owner
JONES, HARRY S. & ELAINE M. III
232 EAST MAIN STREET

ELLSWORTH ME 04605
Sale Date: 9/13/2004

Inspection Witnessed By:

X Date

No./Date	Description	Date Insp.

Notes:

Hancock

Property Data

Neighborhood	**56 Neighborhood 56**	
Tree Growth Year	**0**	
TREE GROWTH RECERTIFY	**0**	
STATE SALE CODE	**0**	
Zone/Land Use	**11 Residential**	
Secondary Zone		
Topography	**9**	**9**
1.Level	4.Below St	7.
2.Rolling	5.Low	8.
3.Above St	6.Swampy	9.
Utilities	**9 None**	**9 None**
1.Public	4.Dr Well	7.Cesspool
2.Water	5.Dug Well	8.
3.Sewer	6.Septic	9.None
Street	**1 Paved**	
1.Paved	4.Proposed	7.
2.Semi Imp	5.	8.
3.Gravel	6.	9.None
REVIEW STRUCTURE YEAR	**0**	
RENTAL? 0=NO 1=YES	**1**	

Sale Data

Sale Date	**9/13/2004**	
Price	**42,000**	
Sale Type	**2 Land & Buildings**	
1.Land	4.Mobile	7.
2.L & B	5.Other	8.
3.Building	6.	9.
Financing	**9 Unknown**	
1.Convent	4.Seller	7.
2.FHA/VA	5.Private	8.
3.Assumed	6.Cash	9.Unknown
Validity	**1 Arms Length Sale**	
1.Valid	4.Split	7.Changes
2.Related	5.Partial	8.Other
3.Distress	6.Exempt	9.Fr Ffclse
Verified	**5 Public Record**	
1.Buyer	4.Agent	7.Family
2.Seller	5.Pub Rec	8.Other
3.Lender	6.MLS	9.

Assessment Record

Year	Land	Buildings	Exempt	Total
2007	36,200	33,100	0	69,300
2008	36,200	33,100	0	69,300
2009	36,200	30,400	0	66,600
2010	36,200	30,400	0	66,600
2011	36,200	28,100	0	64,300
2012	36,200	26,300	0	62,500
2013	36,200	26,300	0	62,500
2014	36,200	25,700	0	61,900
2015	36,200	25,700	0	61,900
2016	36,200	25,700	0	61,900
2017	36,200	25,700	0	61,900
2018	36,200	25,700	0	61,900
2019	36,200	25,700	0	61,900
2020	36,200	25,700	0	61,900

Land Data

Front Foot	Type	Effective Frontage	Effective Depth	Influence Factor	Influence Code
11.Regular Lot				%	
12.Delta Triangle				%	
13.Nabla Triangle				%	
14.Rear Land				%	
15.Miscellaneous				%	
				%	
				%	
Square Foot		**Square Feet**			
16.Regular Lot				%	
17.Secondary Lot				%	
18.Excess Land				%	
19.Condominium				%	
20.Miscellaneous				%	
				%	
				%	
Fract. Acre		**Acreage/Sites**			
21.Homesite (Frac	21	0.90	100	%	0
22.Baselot (Fract	44	1.00	100	%	0
23.Misc (Fract)				%	
Acres				%	
24.Excess Acres 1				%	
25.Excess Acres 5				%	
26.Excess Acres 2				%	
27.Excess Acres 5				%	
28.Excess Acres 1				%	
29.Excess acres				%	

Total Acreage 0.90

Influence Codes

1.Unimproved
2.Excess Frtg
3.Topography
4.Size/Shape
5.Access
6.Restriction
7.Corner Infl
8.Environment
9.Fract Share
Acres
30.Industrial Sit
31.Working Waterf
32.Cultivated Cro
33.Pasture
34.Softwood (Farm
35.Mixed Wood (Fa
36.Hardwood (Farm
37.Softwood
38.Mixed Wood
39.Hardwood
40.Wasteland
41.Gravel Pit
42.Mobile Home Si
43.Location Base
44.Lot Improvemen
45.Waterfront A
46.Lobster Pound

Hancock

Map Lot 223-004 | Account 95 | Location 178 WASHINGTON JUNCTION ROAD | Card 1 Of 1 | 11/30/2020

Building Style **0 Uncoded**		
0.Uncoded	4.Cape	8.Log
1.Conv.	5.Garrison	9.Other
2.Ranch	6.Colonial	10.Dutch C
3.R Ranch	7.Contemp	11.Farmhou
Dwelling Units **0**		
Other Units **0**		
Stories **0**		
1.1	4.1.5	7.3.5
2.2	5.1.75	8.
3.3	6.2.5	9.
Exterior Walls **0 Uncoded**		
0.Uncoded	4.Asbestos	8.Stone
1.Wood	5.Stucco	9.Other
2.Vin/Al	6.Brick Ve	10.Concret
3.Compos.	7.Solid Br	12.
Roof Surface **0**		
1.Asphalt	4.Composit	7.
2.Slate	5.Wood	8.
3.Metal	6.Other	9.
SF Masonry Trim **0**		
OPEN-3-CUSTOM **0**		
OPEN-4-CUSTOM **0**		
Year Built **0**		
Year Remodeled **0**		
Foundation **0**		
1.Concrete	4.Wood	7.
2.C Block	5.Slab	8.
3.Br/Stone	6.Piers	9.
Basement **0**		
1.1/4 Bmt	4.Full Bmt	7.
2.1/2 Bmt	5.None	8.
3.3/4 Bmt	6.	9.None
Bsmt Gar # Cars **0**		
Wet Basement **0**		
1.Dry	4.	7.
2.Damp	5.	8.
3.Wet	6.	9.

SF Bsmt Living **0**		
Fin Bsmt Grade **0 0**		
OPEN-5-CUSTOMIZE **0**		
Heat Type **100%** **0 Uncoded**		
0.Uncoded	4.Steam	8.Fl/Wall
1.HWBB	5.FWA	9.No Heat
2.HWCI	6.GravWA	10.Radiabt
3.H Pump	7.Electric	12.
Cool Type **0%** **9 None**		
1.Refrig	4.W&C Air	7.
2.Evapor	5.	8.
3.H Pump	6.	9.None
Kitchen Style **0**		
1.Modern	4.Obsolete	7.
2.Typical	5.	8.
3.Old Type	6.	9.None
Bath(s) Style **0**		
1.Modern	4.Obsolete	7.
2.Typical	5.	8.
3.Old Type	6.	9.None
# Rooms **0**		
# Bedrooms **0**		
# Full Baths **0**		
# Half Baths **0**		
# Addn Fixtures **0**		
# Fireplaces **0**		

TRIO Software
A Division of Harris Computer Systems

Layout **0**		
1.Typical	4.	7.
2.Inadeq	5.	8.
3.Horrid	6.	9.
Attic **0**		
1.1/4 Fin	4.Full Fin	7.
2.1/2 Fin	5.Fl/Stair	8.
3.3/4 Fin	6.	9.None
Insulation **0**		
1.Full	4.Minimal	7.
2.Heavy	5.Partial	8.
3.Capped	6.	9.None
Unfinished % **0%**		
Grade & Factor **0 0%**		
1.E Grade	4.B Grade	7.AAA Grad
2.D Grade	5.A Grade	8.SC Grade
3.C Grade	6.AA Grade	9.Same
SQFT (Footprint) **0**		
Condition **0**		
1.Poor	4.Avg	7.V G
2.Fair	5.Avg+	8.Exc
3.Avg-	6.Good	9.Same
Phys. % Good **0%**		
Funct. % Good **100%**		
Functional Code **9 None**		
1.Incomp	4.Delap	7.Seasonal
2.O-Built	5.Bsmt	8.
3.Fire	6.2014 ADJ	9.None
Econ. % Good **100%**		
Economic Code **None**		
0.None	3.No Power	7.
1.Location	4.Generate	8.
2.Encroach	9.None	9.
Entrance Code **0**		
1.Interior	4.Vacant	7.
2.Refusal	5.Estimate	8.
3.Informed	6.	9.
Information Code **0**		
1.Owner	4.Agent	7.
2.Relative	5.Estimate	8.
3.Tenant	6.Other	9.

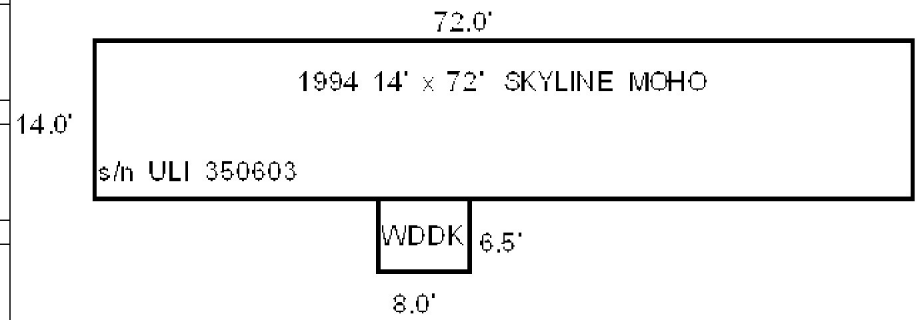

Date Inspected

Additions, Outbuildings & Improvements

Type	Year	Units	Grade	Cond	Phys.	Funct.	Sound Value
998 14 Mobile Home	1994	14x72	3 100	4	0 %	100 %	
68 Wood Deck	2005	52	3 100	4	0 %	100 %	
					%	%	
					%	%	
					%	%	
					%	%	
					%	%	
					%	%	
					%	%	
					%	%	

1.One Story Fram
2.Two Story Fram
3.Three Story Fr
4.1 & 1/2 Story
5.1 & 3/4 Story
6.2 & 1/2 Story
21.Open Frame Por
22.Encl Frame Por
23.Frame Garage
24.Frame Shed
25.Frame Bay Wind
26.1SFr Overhang
27.Unfin Basement
28.Unfinished Att
29.Finished Attic

Map Lot 223-005 Account 1735 Location 184 WASHINGTON JUNCTION ROAD Card 1 Of 1 11/30/2020

PM PAINTING AUTO BODY LLC
184 WASHINGTON JUNCTION RD
HANCOCK ME 04640

B4917P64 B6202P49

Previous Owner
PREBLE, SPENCER & DEANNA
184 WASHINGTON JUNCTION ROAD

HANCOCK ME 04640
Sale Date: 4/08/2014

Inspection Witnessed By:

X Date

No./Date	Description	Date Insp.

Notes:

Property Data

Neighborhood **56 Neighborhood 56**

Tree Growth Year **0**

TREE GROWTH RECERTIFY **0**

STATE SALE CODE **0**

Zone/Land Use **11 Residential**

Secondary Zone **21**

Topography

1.Level	4.Below St	7.
2.Rolling	5.Low	8.
3.Above St	6.Swampy	9.

Utilities

1.Public	4.Dr Well	7.Cesspool
2.Water	5.Dug Well	8.
3.Sewer	6.Septic	9.None

Street **1 Paved**

1.Paved	4.Proposed	7.
2.Semi Imp	5.	8.
3.Gravel	6.	9.None

REVIEW STRUCTURE YEAR **2008**

RENTAL? 0=NO 1=YES **1**

Sale Data

Sale Date **4/08/2014**

Price

Sale Type **2 Land & Buildings**

1.Land	4.Mobile	7.
2.L & B	5.Other	8.
3.Building	6.	9.

Financing **9 Unknown**

1.Convent	4.Seller	7.
2.FHA/VA	5.Private	8.
3.Assumed	6.Cash	9.Unknown

Validity **2 Related Parties**

1.Valid	4.Split	7.Changes
2.Related	5.Partial	8.Other
3.Distress	6.Exempt	9.Fr Ffclse

Verified **5 Public Record**

1.Buyer	4.Agent	7.Family
2.Seller	5.Pub Rec	8.Other
3.Lender	6.MLS	9.

Assessment Record

Year	Land	Buildings	Exempt	Total
2007	37,500	75,400	0	112,900
2008	37,500	92,400	0	129,900
2009	37,500	92,400	0	129,900
2010	37,500	92,400	0	129,900
2011	37,500	92,400	0	129,900
2012	37,500	92,400	0	129,900
2013	37,500	92,400	0	129,900
2014	37,500	92,400	0	129,900
2015	37,500	92,400	0	129,900
2016	37,500	92,400	0	129,900
2017	37,500	91,300	0	128,800
2018	37,500	91,300	0	128,800
2019	37,500	91,300	0	128,800
2020	37,500	91,300	0	128,800

Land Data

Front Foot	Type	Effective Frontage	Effective Depth	Influence Factor	Influence Code
11.Regular Lot				%	
12.Delta Triangle				%	
13.Nabla Triangle				%	
14.Rear Land				%	
15.Miscellaneous				%	
				%	
				%	
Square Foot		**Square Feet**			
16.Regular Lot				%	
17.Secondary Lot				%	
18.Excess Land				%	
19.Condominium				%	
20.Miscellaneous				%	
				%	
				%	
Fract. Acre		**Acreage/Sites**			
21.Homesite (Frac	21	1.00	100	%	0
22.Baselot (Fract	44	1.00	100	%	0
23.Misc (Fract)				%	
Acres				%	
24.Excess Acres 1				%	
25.Excess Acres 5				%	
26.Excess Acres 2				%	
27.Excess Acres 5				%	
28.Excess Acres 1				%	
29.Excess acres				%	

Total Acreage 1.00

Influence Codes

1.Unimproved
2.Excess Frtg
3.Topography
4.Size/Shape
5.Access
6.Restriction
7.Corner Infl
8.Environment
9.Fract Share
Acres
30.Industrial Sit
31.Working Waterf
32.Cultivated Cro
33.Pasture
34.Softwood (Farm
35.Mixed Wood (Fa
36.Hardwood (Farm
37.Softwood
38.Mixed Wood
39.Hardwood
40.Wasteland
41.Gravel Pit
42.Mobile Home Si
43.Location Base
44.Lot Improvemen
45.Waterfront A
46.Lobster Pound

Hancock

Hancock

Map Lot 223-005 | Account 1735 | Location 184 WASHINGTON JUNCTION ROAD | Card 1 Of 1 | 11/30/2020

Building Style **0 Uncoded**		
0.Uncoded	4.Cape	8.Log
1.Conv.	5.Garrison	9.Other
2.Ranch	6.Colonial	10.Dutch C
3.R Ranch	7.Contemp	11.Farmhou
Dwelling Units **0**		
Other Units **0**		
Stories **0**		
1.1	4.1.5	7.3.5
2.2	5.1.75	8.
3.3	6.2.5	9.
Exterior Walls **0 Uncoded**		
0.Uncoded	4.Asbestos	8.Stone
1.Wood	5.Stucco	9.Other
2.Vin/Al	6.Brick Ve	10.Concret
3.Compos.	7.Solid Br	12.
Roof Surface **0**		
1.Asphalt	4.Composit	7.
2.Slate	5.Wood	8.
3.Metal	6.Other	9.
SF Masonry Trim **0**		
OPEN-3-CUSTOM **0**		
OPEN-4-CUSTOM **0**		
Year Built **0**		
Year Remodeled **0**		
Foundation **0**		
1.Concrete	4.Wood	7.
2.C Block	5.Slab	8.
3.Br/Stone	6.Piers	9.
Basement **0**		
1.1/4 Bmt	4.Full Bmt	7.
2.1/2 Bmt	5.None	8.
3.3/4 Bmt	6.	9.None
Bsmt Gar # Cars **0**		
Wet Basement **0**		
1.Dry	4.	7.
2.Damp	5.	8.
3.Wet	6.	9.

SF Bsmt Living **0**		
Fin Bsmt Grade **0 0**		
OPEN-5-CUSTOMIZE **0**		
Heat Type **100%** **0 Uncoded**		
0.Uncoded	4.Steam	8.Fl/Wall
1.HWBB	5.FWA	9.No Heat
2.HWCI	6.GravWA	10.Radiabt
3.H Pump	7.Electric	12.
Cool Type **0%** **9 None**		
1.Refrig	4.W&C Air	7.
2.Evapor	5.	8.
3.H Pump	6.	9.None
Kitchen Style **0**		
1.Modern	4.Obsolete	7.
2.Typical	5.	8.
3.Old Type	6.	9.None
Bath(s) Style **0**		
1.Modern	4.Obsolete	7.
2.Typical	5.	8.
3.Old Type	6.	9.None
# Rooms **0**		
# Bedrooms **0**		
# Full Baths **0**		
# Half Baths **0**		
# Addn Fixtures **0**		
# Fireplaces **0**		

TRIO Software
A Division of Harris Computer Systems

Layout **0**		
1.Typical	4.	7.
2.Inadeq	5.	8.
3.Horrid	6.	9.
Attic **0**		
1.1/4 Fin	4.Full Fin	7.
2.1/2 Fin	5.Fl/Stair	8.
3.3/4 Fin	6.	9.None
Insulation **0**		
1.Full	4.Minimal	7.
2.Heavy	5.Partial	8.
3.Capped	6.	9.None
Unfinished % **0%**		
Grade & Factor **0 0%**		
1.E Grade	4.B Grade	7.AAA Grad
2.D Grade	5.A Grade	8.SC Grade
3.C Grade	6.AA Grade	9.Same
SQFT (Footprint) **0**		
Condition **0**		
1.Poor	4.Avg	7.V G
2.Fair	5.Avg+	8.Exc
3.Avg-	6.Good	9.Same
Phys. % Good **0%**		
Funct. % Good **100%**		
Functional Code **9 None**		
1.Incomp	4.Delap	7.Seasonal
2.O-Built	5.Bsmt	8.
3.Fire	6.2014 ADJ	9.None
Econ. % Good **100%**		
Economic Code **None**		
0.None	3.No Power	7.
1.Location	4.Generate	8.
2.Encroach	9.None	9.
Entrance Code **0**		
1.Interior	4.Vacant	7.
2.Refusal	5.Estimate	8.
3.Informed	6.	9.
Information Code **0**		
1.Owner	4.Agent	7.
2.Relative	5.Estimate	8.
3.Tenant	6.Other	9.

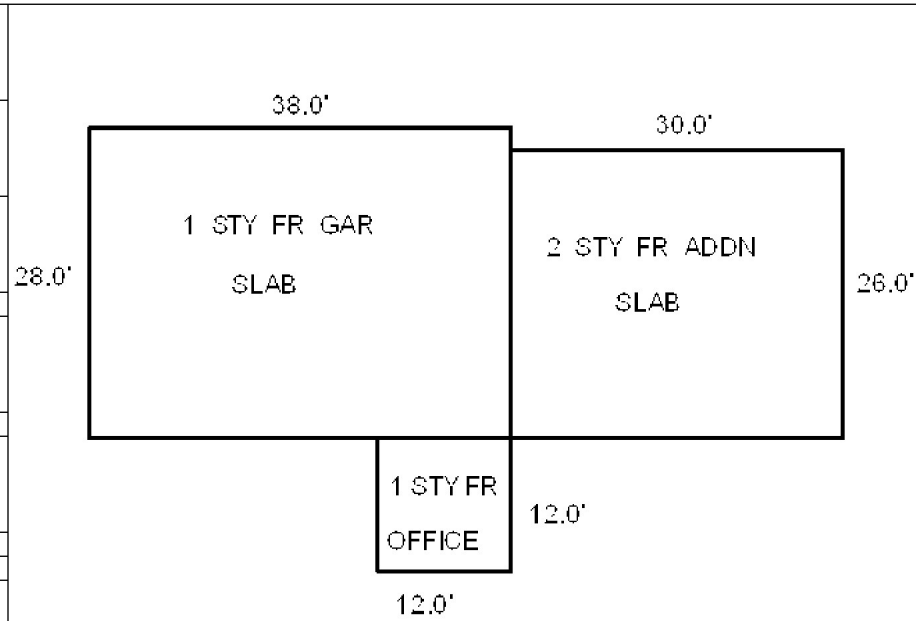

Date Inspected

Additions, Outbuildings & Improvements

Type	Year	Units	Grade	Cond	Phys.	Funct.	Sound Value
81 1 SF GARAGE	1995	1064	3 100	3	0 %	100 %	
2 Two Story Frame	2003	780	4 100	3	0 %	100 %	
74 CAMP - 3	2003	1	4 100	3	0 %	100 %	
1 One Story Frame	2003	144	3 100	4	0 %	100 %	
					%	%	
					%	%	
					%	%	
					%	%	
					%	%	
					%	%	

1.One Story Fram
2.Two Story Fram
3.Three Story Fr
4.1 & 1/2 Story
5.1 & 3/4 Story
6.2 & 1/2 Story
21.Open Frame Por
22.Encl Frame Por
23.Frame Garage
24.Frame Shed
25.Frame Bay Wind
26.1SFr Overhang
27.Unfin Basement
28.Unfinished Att
29.Finished Attic

Map Lot 223-006 Account 1675 Location 12 CHURCH LANE Card 1 Of 1 11/30/2020

WHITMORE, SR., TERRENCE L
12 CHURCH LANE
HANCOCK ME 04640

B1115P111

Inspection Witnessed By:

X Date

No./Date	Description	Date Insp.

Notes:

Hancock

Property Data

Neighborhood **56 Neighborhood 56**

Tree Growth Year **0**

TREE GROWTH RECERTIFY **0**

STATE SALE CODE **0**

Zone/Land Use **11 Residential**

Secondary Zone

Topography

1.Level	4.Below St	7.
2.Rolling	5.Low	8.
3.Above St	6.Swampy	9.

Utilities

1.Public	4.Dr Well	7.Cesspool
2.Water	5.Dug Well	8.
3.Sewer	6.Septic	9.None

Street

1.Paved	4.Proposed	7.
2.Semi Imp	5.	8.
3.Gravel	6.	9.None

REVIEW STRUCTURE YEAR **2008**

RENTAL? 0=NO 1=YES **2**

Sale Data

Sale Date

Price

Sale Type

1.Land	4.Mobile	7.
2.L & B	5.Other	8.
3.Building	6.	9.

Financing

1.Convent	4.Seller	7.
2.FHA/VA	5.Private	8.
3.Assumed	6.Cash	9.Unknown

Validity

1.Valid	4.Split	7.Changes
2.Related	5.Partial	8.Other
3.Distress	6.Exempt	9.Fr Ffclse

Verified

1.Buyer	4.Agent	7.Family
2.Seller	5.Pub Rec	8.Other
3.Lender	6.MLS	9.

Assessment Record

Year	Land	Buildings	Exempt	Total
2007	38,300	83,700	13,000	109,000
2008	38,300	90,300	13,000	115,600
2009	38,300	90,300	13,000	115,600
2010	38,300	90,300	10,000	118,600
2011	38,300	90,300	10,000	118,600
2012	38,300	90,300	10,000	118,600
2013	38,300	90,300	10,000	118,600
2014	38,300	81,300	10,800	108,800
2015	38,300	81,300	0	119,600
2016	38,300	81,300	0	119,600
2017	38,300	74,500	0	112,800
2018	38,300	74,500	0	112,800
2019	38,300	74,500	0	112,800
2020	43,200	74,500	6,000	111,700

Land Data

Front Foot	Type	Effective Frontage	Effective Depth	Influence Factor	Influence Code
11.Regular Lot				%	
12.Delta Triangle				%	
13.Nabla Triangle				%	
14.Rear Land				%	
15.Miscellaneous				%	
				%	
				%	
Square Foot		**Square Feet**			
16.Regular Lot				%	
17.Secondary Lot				%	
18.Excess Land				%	
19.Condominium				%	
20.Miscellaneous				%	
				%	
				%	
Fract. Acre		**Acreage/Sites**			
21.Homesite (Frac	21	1.00	100	%	0
22.Baselot (Fract	24	4.00	100	%	0
23.Misc (Fract)	25	2.03	100	%	0
Acres	44	1.00	100	%	0
24.Excess Acres 1				%	
25.Excess Acres 5				%	
26.Excess Acres 2				%	
27.Excess Acres 5					
28.Excess Acres 1					
29.Excess acres					

Total Acreage 7.03

Influence Codes

1.Unimproved
2.Excess Frtg
3.Topography
4.Size/Shape
5.Access
6.Restriction
7.Corner Infl
8.Environment
9.Fract Share
Acres
30.Industrial Sit
31.Working Waterf
32.Cultivated Cro
33.Pasture
34.Softwood (Farm
35.Mixed Wood (Fa
36.Hardwood (Farm
37.Softwood
38.Mixed Wood
39.Hardwood
40.Wasteland
41.Gravel Pit
42.Mobile Home Si
43.Location Base
44.Lot Improvemen
45.Waterfront A
46.Lobster Pound

Hancock

Map Lot 223-006 | Account 1675 | Location 12 CHURCH LANE | Card 1 Of 1 | 11/30/2020

Building Style **2 Ranch**		
0.Uncoded	4.Cape	8.Log
1.Conv.	5.Garrison	9.Other
2.Ranch	6.Colonial	10.Dutch C
3.R Ranch	7.Contemp	11.Farmhou
Dwelling Units **1**		
Other Units **0**		
Stories **1 One Story**		
1.1	4.1.5	7.3.5
2.2	5.1.75	8.
3.3	6.2.5	9.
Exterior Walls **0 Uncoded**		
0.Uncoded	4.Asbestos	8.Stone
1.Wood	5.Stucco	9.Other
2.Vin/Al	6.Brick Ve	10.Concret
3.Compos.	7.Solid Br	12.
Roof Surface **1 Asphalt Shingles**		
1.Asphalt	4.Composit	7.
2.Slate	5.Wood	8.
3.Metal	6.Other	9.
SF Masonry Trim **0**		
OPEN-3-CUSTOM **0**		
OPEN-4-CUSTOM **0**		
Year Built **1990**		
Year Remodeled **0**		
Foundation **5 Concrete Slab**		
1.Concrete	4.Wood	7.
2.C Block	5.Slab	8.
3.Br/Stone	6.Piers	9.
Basement **9 No Basement**		
1.1/4 Bmt	4.Full Bmt	7.
2.1/2 Bmt	5.None	8.
3.3/4 Bmt	6.	9.None
Bsmt Gar # Cars **0**		
Wet Basement **9 No Basement**		
1.Dry	4.	7.
2.Damp	5.	8.
3.Wet	6.	9.

SF Bsmt Living **0**		
Fin Bsmt Grade **0 0**		
OPEN-5-CUSTOMIZE **0**		
Heat Type **100% 5 Forced Warm Air**		
0.Uncoded	4.Steam	8.Fl/Wall
1.HWBB	5.FWA	9.No Heat
2.HWCI	6.GravWA	10.Radiabt
3.H Pump	7.Electric	12.
Cool Type **100% 9 None**		
1.Refrig	4.W&C Air	7.
2.Evapor	5.	8.
3.H Pump	6.	9.None
Kitchen Style **2 Typical**		
1.Modern	4.Obsolete	7.
2.Typical	5.	8.
3.Old Type	6.	9.None
Bath(s) Style **2 Typical Bath(s)**		
1.Modern	4.Obsolete	7.
2.Typical	5.	8.
3.Old Type	6.	9.None
# Rooms **5**		
# Bedrooms **2**		
# Full Baths **1**		
# Half Baths **0**		
# Addn Fixtures **0**		
# Fireplaces **0**		

TRIO Software
A Division of Harris Computer Systems

Layout **1 Typical**		
1.Typical	4.	7.
2.Inadeq	5.	8.
3.Horrid	6.	9.
Attic **9 None**		
1.1/4 Fin	4.Full Fin	7.
2.1/2 Fin	5.Fl/Stair	8.
3.3/4 Fin	6.	9.None
Insulation **1 Full**		
1.Full	4.Minimal	7.
2.Heavy	5.Partial	8.
3.Capped	6.	9.None
Unfinished % **0%**		
Grade & Factor **3 Average 90%**		
1.E Grade	4.B Grade	7.AAA Grad
2.D Grade	5.A Grade	8.SC Grade
3.C Grade	6.AA Grade	9.Same
SQFT (Footprint) **1092**		
Condition **4 Average**		
1.Poor	4.Avg	7.V G
2.Fair	5.Avg+	8.Exc
3.Avg-	6.Good	9.Same
Phys. % Good **0%**		
Funct. % Good **90%**		
Functional Code **6 2014 ADJUSTMENT**		
1.Incomp	4.Delap	7.Seasonal
2.O-Built	5.Bsmt	8.
3.Fire	6.2014 ADJ	9.None
Econ. % Good **100%**		
Economic Code **None**		
0.None	3.No Power	7.
1.Location	4.Generate	8.
2.Encroach	9.None	9.
Entrance Code **0**		
1.Interior	4.Vacant	7.
2.Refusal	5.Estimate	8.
3.Informed	6.	9.
Information Code **0**		
1.Owner	4.Agent	7.
2.Relative	5.Estimate	8.
3.Tenant	6.Other	9.

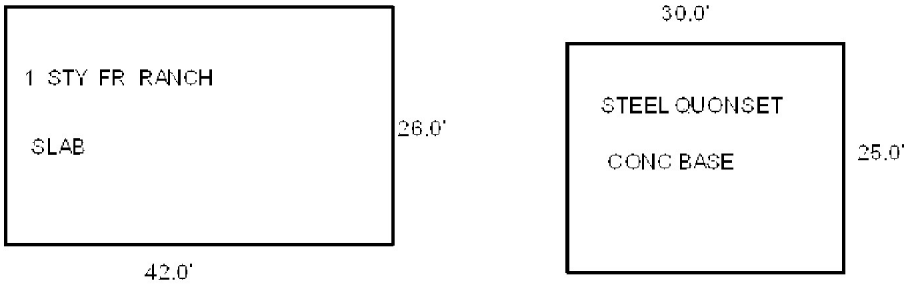

Date Inspected

Additions, Outbuildings & Improvements

Type	Year	Units	Grade	Cond	Phys.	Funct.	Sound Value
					%	%	
					%	%	
					%	%	
					%	%	
					%	%	
					%	%	
					%	%	
					%	%	
					%	%	
					%	%	

1.One Story Fram
2.Two Story Fram
3.Three Story Fr
4.1 & 1/2 Story
5.1 & 3/4 Story
6.2 & 1/2 Story
21.Open Frame Por
22.Encl Frame Por
23.Frame Garage
24.Frame Shed
25.Frame Bay Wind
26.1SFr Overhang
27.Unfin Basement
28.Unfinished Att
29.Finished Attic

Map Lot 223-007 Account 333 Location 16 WHETEM LANE Card 1 Of 1 11/30/2020

WHITMORE, EUGENE L. & LUCY S.
C/O ETTA PERKINS
65 RANGE ROAD
BLUE HILL ME 04614

B2478P27

Property Data

Neighborhood **56 Neighborhood 56**

Tree Growth Year **0**

TREE GROWTH RECERTIFY **0**

STATE SALE CODE **0**

Zone/Land Use **11 Residential**

Secondary Zone

Topography **9** **9**

1.Level 4.Below St 7.
2.Rolling 5.Low 8.
3.Above St 6.Swampy 9.

Utilities **9 None** **9 None**

1.Public 4.Dr Well 7.Cesspool
2.Water 5.Dug Well 8.
3.Sewer 6.Septic 9.None

Street **9 None**

1.Paved 4.Proposed 7.
2.Semi Imp 5. 8.
3.Gravel 6. 9.None

REVIEW STRUCTURE YEAR **0**

RENTAL? 0=NO 1=YES **0**

Sale Data

Sale Date

Price

Sale Type

1.Land 4.Mobile 7.
2.L & B 5.Other 8.
3.Building 6. 9.

Financing

1.Convent 4.Seller 7.
2.FHA/VA 5.Private 8.
3.Assumed 6.Cash 9.Unknown

Validity

1.Valid 4.Split 7.Changes
2.Related 5.Partial 8.Other
3.Distress 6.Exempt 9.Fr Ffclse

Verified

1.Buyer 4.Agent 7.Family
2.Seller 5.Pub Rec 8.Other
3.Lender 6.MLS 9.

Assessment Record

Year	Land	Buildings	Exempt	Total
2007	28,800	53,200	0	82,000
2008	28,800	53,200	0	82,000
2009	48,800	49,700	0	98,500
2010	48,800	49,700	0	98,500
2011	48,800	47,000	0	95,800
2012	48,800	44,700	0	93,500
2013	48,800	44,700	0	93,500
2014	48,800	44,000	0	92,800
2015	48,800	44,000	11,000	81,800
2018	48,800	43,800	22,000	70,600
2019	48,800	43,800	22,000	70,600
2020	47,600	36,700	0	84,300

Land Data

Front Foot	Type	Effective Frontage	Effective Depth	Influence Factor	Influence Code
11.Regular Lot				%	
12.Delta Triangle				%	
13.Nabla Triangle				%	
14.Rear Land				%	
15.Miscellaneous				%	
				%	
				%	
Square Foot		**Square Feet**			
16.Regular Lot				%	
17.Secondary Lot				%	
18.Excess Land				%	
19.Condominium				%	
20.Miscellaneous				%	
				%	
				%	
Fract. Acre		**Acreage/Sites**			
21.Homesite (Frac	21	1.00	100	%	0
22.Baselot (Fract	26	2.06	100	%	0
23.Misc (Fract)	44	1.60	100	%	0
Acres				%	
24.Excess Acres 1				%	
25.Excess Acres 5				%	
26.Excess Acres 2				%	
27.Excess Acres 5				%	
28.Excess Acres 1				%	
29.Excess acres				%	

Total Acreage 3.06

Influence Codes

1.Unimproved
2.Excess Frtg
3.Topography
4.Size/Shape
5.Access
6.Restriction
7.Corner Infl
8.Environment
9.Fract Share
Acres
30.Industrial Sit
31.Working Waterf
32.Cultivated Cro
33.Pasture
34.Softwood (Farm
35.Mixed Wood (Fa
36.Hardwood (Farm
37.Softwood
38.Mixed Wood
39.Hardwood
40.Wasteland
41.Gravel Pit
42.Mobile Home Si
43.Location Base
44.Lot Improvemen
45.Waterfront A
46.Lobster Pound

Inspection Witnessed By:

X Date

No./Date	Description	Date Insp.

Notes:

Hancock

Hancock

Map Lot 223-007 | Account 333 | Location 16 WHETEM LANE | Card 1 Of 1 | 11/30/2020

Building Style **0 Uncoded**		
0.Uncoded	4.Cape	8.Log
1.Conv.	5.Garrison	9.Other
2.Ranch	6.Colonial	10.Dutch C
3.R Ranch	7.Contemp	11.Farmhou
Dwelling Units **0**		
Other Units **0**		
Stories **0**		
1.1	4.1.5	7.3.5
2.2	5.1.75	8.
3.3	6.2.5	9.
Exterior Walls **0 Uncoded**		
0.Uncoded	4.Asbestos	8.Stone
1.Wood	5.Stucco	9.Other
2.Vin/Al	6.Brick Ve	10.Concret
3.Compos.	7.Solid Br	12.
Roof Surface **0**		
1.Asphalt	4.Composit	7.
2.Slate	5.Wood	8.
3.Metal	6.Other	9.
SF Masonry Trim **0**		
OPEN-3-CUSTOM **0**		
OPEN-4-CUSTOM **0**		
Year Built **0**		
Year Remodeled **0**		
Foundation **0**		
1.Concrete	4.Wood	7.
2.C Block	5.Slab	8.
3.Br/Stone	6.Piers	9.
Basement **0**		
1.1/4 Bmt	4.Full Bmt	7.
2.1/2 Bmt	5.None	8.
3.3/4 Bmt	6.	9.None
Bsmt Gar # Cars **0**		
Wet Basement **0**		
1.Dry	4.	7.
2.Damp	5.	8.
3.Wet	6.	9.

SF Bsmt Living **0**		
Fin Bsmt Grade **0 0**		
OPEN-5-CUSTOMIZE **0**		
Heat Type **100%** **0 Uncoded**		
0.Uncoded	4.Steam	8.Fl/Wall
1.HWBB	5.FWA	9.No Heat
2.HWCI	6.GravWA	10.Radiabt
3.H Pump	7.Electric	12.
Cool Type **0%** **9 None**		
1.Refrig	4.W&C Air	7.
2.Evapor	5.	8.
3.H Pump	6.	9.None
Kitchen Style **0**		
1.Modern	4.Obsolete	7.
2.Typical	5.	8.
3.Old Type	6.	9.None
Bath(s) Style **0**		
1.Modern	4.Obsolete	7.
2.Typical	5.	8.
3.Old Type	6.	9.None
# Rooms **0**		
# Bedrooms **0**		
# Full Baths **0**		
# Half Baths **0**		
# Addn Fixtures **0**		
# Fireplaces **0**		

TRIO Software
A Division of Harris Computer Systems

Layout **0**		
1.Typical	4.	7.
2.Inadeq	5.	8.
3.Horrid	6.	9.
Attic **0**		
1.1/4 Fin	4.Full Fin	7.
2.1/2 Fin	5.Fl/Stair	8.
3.3/4 Fin	6.	9.None
Insulation **0**		
1.Full	4.Minimal	7.
2.Heavy	5.Partial	8.
3.Capped	6.	9.None
Unfinished % **0%**		
Grade & Factor **0 0%**		
1.E Grade	4.B Grade	7.AAA Grad
2.D Grade	5.A Grade	8.SC Grade
3.C Grade	6.AA Grade	9.Same
SQFT (Footprint) **0**		
Condition **0**		
1.Poor	4.Avg	7.V G
2.Fair	5.Avg+	8.Exc
3.Avg-	6.Good	9.Same
Phys. % Good **0%**		
Funct. % Good **100%**		
Functional Code **9 None**		
1.Incomp	4.Delap	7.Seasonal
2.O-Built	5.Bsmt	8.
3.Fire	6.2014 ADJ	9.None
Econ. % Good **100%**		
Economic Code **None**		
0.None	3.No Power	7.
1.Location	4.Generate	8.
2.Encroach	9.None	9.
Entrance Code **0**		
1.Interior	4.Vacant	7.
2.Refusal	5.Estimate	8.
3.Informed	6.	9.
Information Code **0**		
1.Owner	4.Agent	7.
2.Relative	5.Estimate	8.
3.Tenant	6.Other	9.

Date Inspected

Additions, Outbuildings & Improvements

Type	Year	Units	Grade	Cond	Phys.	Funct.	Sound Value
994 Double Wide	1995	26x48	3 100	4	0 %	100 %	
68 Wood Deck	1995	148	2 100	4	0 %	100 %	
22 Encl Frame Porch	1995	60	2 80	4	0 %	100 %	
81 1 SF GARAGE	1995	281	2 100	4	0 %	100 %	
					%	%	
					%	%	
					%	%	
					%	%	
					%	%	
					%	%	

1.One Story Fram
2.Two Story Fram
3.Three Story Fr
4.1 & 1/2 Story
5.1 & 3/4 Story
6.2 & 1/2 Story
21.Open Frame Por
22.Encl Frame Por
23.Frame Garage
24.Frame Shed
25.Frame Bay Wind
26.1SFr Overhang
27.Unfin Basement
28.Unfinished Att
29.Finished Attic

Map Lot 223-008 Account 2001 Location 27 CHURCH LANE Card 1 Of 1 11/30/2020

CROSS ROADS APOLISTIC CHURCH
C/O COX, MICHAEL
PO BOX 95
ELLSWORTH ME 04605

B3952P338 B5702P303

Property Data

Neighborhood **56 Neighborhood 56**

Tree Growth Year **0**

TREE GROWTH RECERTIFY **0**

STATE SALE CODE **0**

Zone/Land Use **11 Residential**

Secondary Zone

Topography

1.Level	4.Below St	7.
2.Rolling	5.Low	8.
3.Above St	6.Swampy	9.

Utilities

1.Public	4.Dr Well	7.Cesspool
2.Water	5.Dug Well	8.
3.Sewer	6.Septic	9.None

Street

1.Paved	4.Proposed	7.
2.Semi Imp	5.	8.
3.Gravel	6.	9.None

REVIEW STRUCTURE YEAR **0**

RENTAL? 0=NO 1=YES **0**

Sale Data

Sale Date

Price **6,000**

Sale Type **2 Land & Buildings**

1.Land	4.Mobile	7.
2.L & B	5.Other	8.
3.Building	6.	9.

Financing **9 Unknown**

1.Convent	4.Seller	7.
2.FHA/VA	5.Private	8.
3.Assumed	6.Cash	9.Unknown

Validity **8 Other Non Valid**

1.Valid	4.Split	7.Changes
2.Related	5.Partial	8.Other
3.Distress	6.Exempt	9.Fr Ffclse

Verified **5 Public Record**

1.Buyer	4.Agent	7.Family
2.Seller	5.Pub Rec	8.Other
3.Lender	6.MLS	9.

Assessment Record

Year	Land	Buildings	Exempt	Total
2007	33,800	0	33,800	0
2008	33,800	0	33,800	0
2009	71,300	530,400	601,700	0
2010	71,300	530,400	601,700	0
2011	71,300	530,400	601,700	0
2012	71,300	530,400	601,700	0
2013	71,300	530,400	601,700	0
2014	71,300	530,400	601,700	0
2015	71,300	530,400	601,700	0
2016	71,300	530,400	601,700	0
2017	71,300	530,400	601,700	0
2018	71,300	530,400	601,700	0
2019	71,300	530,400	601,700	0
2020	71,300	530,400	601,700	0

Land Data

Front Foot	Type	Effective Frontage	Effective Depth	Influence Factor	Influence Code
11.Regular Lot				%	
12.Delta Triangle				%	
13.Nabla Triangle				%	
14.Rear Land				%	
15.Miscellaneous				%	
				%	
				%	
Square Foot		**Square Feet**			
16.Regular Lot				%	
17.Secondary Lot				%	
18.Excess Land				%	
19.Condominium				%	
20.Miscellaneous				%	
				%	
				%	
Fract. Acre		**Acreage/Sites**			
21.Homesite (Frac	21	1.00		100 %	0
22.Baselot (Fract	26	7.00		100 %	0
23.Misc (Fract)	44	1.00		300 %	0
Acres				%	
24.Excess Acres 1				%	
25.Excess Acres 5				%	
26.Excess Acres 2				%	
27.Excess Acres 5				%	
28.Excess Acres 1				%	
29.Excess acres				%	

Total Acreage 8.00

Influence Codes

1.Unimproved
2.Excess Frtg
3.Topography
4.Size/Shape
5.Access
6.Restriction
7.Corner Infl
8.Environment
9.Fract Share
Acres
30.Industrial Sit
31.Working Waterf
32.Cultivated Cro
33.Pasture
34.Softwood (Farm
35.Mixed Wood (Fa
36.Hardwood (Farm
37.Softwood
38.Mixed Wood
39.Hardwood
40.Wasteland
41.Gravel Pit
42.Mobile Home Si
43.Location Base
44.Lot Improvemen
45.Waterfront A
46.Lobster Pound

Inspection Witnessed By:

X Date

No./Date	Description	Date Insp.

Notes:

Hancock

Hancock

Map Lot 223-008 | Account 2001 | Location 27 CHURCH LANE | Card 1 Of 1 | 11/30/2020

Building Style **0 Uncoded**		
0.Uncoded	4.Cape	8.Log
1.Conv.	5.Garrison	9.Other
2.Ranch	6.Colonial	10.Dutch C
3.R Ranch	7.Contemp	11.Farmhou
Dwelling Units **0**		
Other Units **0**		
Stories **0**		
1.1	4.1.5	7.3.5
2.2	5.1.75	8.
3.3	6.2.5	9.
Exterior Walls **0 Uncoded**		
0.Uncoded	4.Asbestos	8.Stone
1.Wood	5.Stucco	9.Other
2.Vin/Al	6.Brick Ve	10.Concret
3.Compos.	7.Solid Br	12.
Roof Surface **0**		
1.Asphalt	4.Composit	7.
2.Slate	5.Wood	8.
3.Metal	6.Other	9.
SF Masonry Trim **0**		
OPEN-3-CUSTOM **0**		
OPEN-4-CUSTOM **0**		
Year Built **0**		
Year Remodeled **0**		
Foundation **0**		
1.Concrete	4.Wood	7.
2.C Block	5.Slab	8.
3.Br/Stone	6.Piers	9.
Basement **0**		
1.1/4 Bmt	4.Full Bmt	7.
2.1/2 Bmt	5.None	8.
3.3/4 Bmt	6.	9.None
Bsmt Gar # Cars **0**		
Wet Basement **0**		
1.Dry	4.	7.
2.Damp	5.	8.
3.Wet	6.	9.

SF Bsmt Living **0**		
Fin Bsmt Grade **0 0**		
OPEN-5-CUSTOMIZE **0**		
Heat Type **100%** **0 Uncoded**		
0.Uncoded	4.Steam	8.Fl/Wall
1.HWBB	5.FWA	9.No Heat
2.HWCI	6.GravWA	10.Radiabt
3.H Pump	7.Electric	12.
Cool Type **0%** **9 None**		
1.Refrig	4.W&C Air	7.
2.Evapor	5.	8.
3.H Pump	6.	9.None
Kitchen Style **0**		
1.Modern	4.Obsolete	7.
2.Typical	5.	8.
3.Old Type	6.	9.None
Bath(s) Style **0**		
1.Modern	4.Obsolete	7.
2.Typical	5.	8.
3.Old Type	6.	9.None
# Rooms **0**		
# Bedrooms **0**		
# Full Baths **0**		
# Half Baths **0**		
# Addn Fixtures **0**		
# Fireplaces **0**		

TRIO Software
A Division of Harris Computer Systems

Layout **0**		
1.Typical	4.	7.
2.Inadeq	5.	8.
3.Horrid	6.	9.
Attic **0**		
1.1/4 Fin	4.Full Fin	7.
2.1/2 Fin	5.Fl/Stair	8.
3.3/4 Fin	6.	9.None
Insulation **0**		
1.Full	4.Minimal	7.
2.Heavy	5.Partial	8.
3.Capped	6.	9.None
Unfinished % **0%**		
Grade & Factor **0 0%**		
1.E Grade	4.B Grade	7.AAA Grad
2.D Grade	5.A Grade	8.SC Grade
3.C Grade	6.AA Grade	9.Same
SQFT (Footprint) **0**		
Condition **0**		
1.Poor	4.Avg	7.V G
2.Fair	5.Avg+	8.Exc
3.Avg-	6.Good	9.Same
Phys. % Good **0%**		
Funct. % Good **100%**		
Functional Code **9 None**		
1.Incomp	4.Delap	7.Seasonal
2.O-Built	5.Bsmt	8.
3.Fire	6.2014 ADJ	9.None
Econ. % Good **100%**		
Economic Code **None**		
0.None	3.No Power	7.
1.Location	4.Generate	8.
2.Encroach	9.None	9.
Entrance Code **0**		
1.Interior	4.Vacant	7.
2.Refusal	5.Estimate	8.
3.Informed	6.	9.
Information Code **0**		
1.Owner	4.Agent	7.
2.Relative	5.Estimate	8.
3.Tenant	6.Other	9.

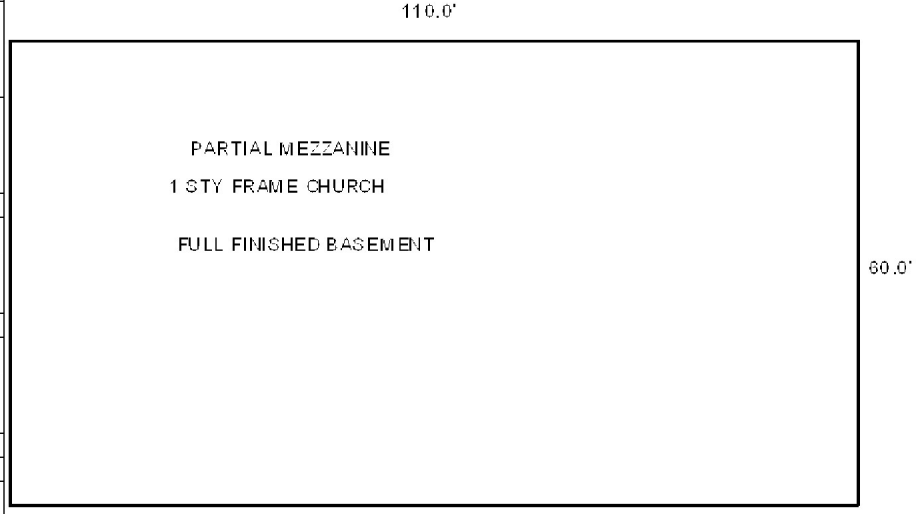

Date Inspected

Additions, Outbuildings & Improvements

Type	Year	Units	Grade	Cond	Phys.	Funct.	Sound Value
502 CROSS ROADS	2009	6600	2 100	4	0 %	100 %	
					%	%	
					%	%	
					%	%	
					%	%	
					%	%	
					%	%	
					%	%	
					%	%	
					%	%	

1.One Story Fram
2.Two Story Fram
3.Three Story Fr
4.1 & 1/2 Story
5.1 & 3/4 Story
6.2 & 1/2 Story
21.Open Frame Por
22.Encl Frame Por
23.Frame Garage
24.Frame Shed
25.Frame Bay Wind
26.1SFr Overhang
27.Unfin Basement
28.Unfinished Att
29.Finished Attic

Map Lot 223-009-003 Account 1841 Location 49 WHETEM LANE Card 1 Of 1 11/30/2020

WHITMORE SR., HARRY,
WHITMORE, JR. HARRY E
49 WHETEM LANE
HANCOCK ME 04640

B5872P70 B6890P156 B6914P681

Property Data

Neighborhood **56 Neighborhood 56**

Tree Growth Year **0**

TREE GROWTH RECERTIFY **0**

STATE SALE CODE **0**

Zone/Land Use **11 Residential**

Secondary Zone

Topography

1.Level	4.Below St	7.
2.Rolling	5.Low	8.
3.Above St	6.Swampy	9.

Utilities

1.Public	4.Dr Well	7.Cesspool
2.Water	5.Dug Well	8.
3.Sewer	6.Septic	9.None

Street

1.Paved	4.Proposed	7.
2.Semi Imp	5.	8.
3.Gravel	6.	9.None

REVIEW STRUCTURE YEAR **0**

RENTAL? 0=NO 1=YES **0**

Sale Data

Sale Date

Price

Sale Type

1.Land	4.Mobile	7.
2.L & B	5.Other	8.
3.Building	6.	9.

Financing

1.Convent	4.Seller	7.
2.FHA/VA	5.Private	8.
3.Assumed	6.Cash	9.Unknown

Validity

1.Valid	4.Split	7.Changes
2.Related	5.Partial	8.Other
3.Distress	6.Exempt	9.Fr Ffclse

Verified

1.Buyer	4.Agent	7.Family
2.Seller	5.Pub Rec	8.Other
3.Lender	6.MLS	9.

Assessment Record

Year	Land	Buildings	Exempt	Total
2007	0	28,500	0	28,500
2008	0	41,800	0	41,800
2009	0	39,300	0	39,300
2010	0	39,300	0	39,300
2011	0	36,700	0	36,700
2012	0	34,700	0	34,700
2013	37,600	35,700	0	73,300
2014	37,600	35,400	10,800	62,200
2015	37,600	35,400	11,000	62,000
2016	37,600	35,400	16,500	56,500
2017	37,600	35,400	22,000	51,000
2018	37,600	35,400	22,000	51,000
2019	37,600	35,400	22,000	51,000
2020	37,600	35,400	25,000	48,000

Land Data

Front Foot	Type	Effective Frontage	Effective Depth	Influence Factor	Influence Code
11.Regular Lot				%	
12.Delta Triangle				%	
13.Nabla Triangle				%	
14.Rear Land				%	
15.Miscellaneous				%	
				%	
				%	
Square Foot		**Square Feet**			
16.Regular Lot				%	
17.Secondary Lot				%	
18.Excess Land				%	
19.Condominium				%	
20.Miscellaneous				%	
				%	
				%	
Fract. Acre		**Acreage/Sites**			
21.Homesite (Frac	21	1.00	100	%	0
22.Baselot (Fract	24	0.14	100	%	0
23.Misc (Fract)	44	1.00	100	%	0
Acres				%	
24.Excess Acres 1				%	
25.Excess Acres 5				%	
26.Excess Acres 2				%	
27.Excess Acres 5				%	
28.Excess Acres 1				%	
29.Excess acres				%	

Total Acreage 1.14

Influence Codes

1.Unimproved
2.Excess Frtg
3.Topography
4.Size/Shape
5.Access
6.Restriction
7.Corner Infl
8.Environment
9.Fract Share
Acres
30.Industrial Sit
31.Working Waterf
32.Cultivated Cro
33.Pasture
34.Softwood (Farm
35.Mixed Wood (Fa
36.Hardwood (Farm
37.Softwood
38.Mixed Wood
39.Hardwood
40.Wasteland
41.Gravel Pit
42.Mobile Home Si
43.Location Base
44.Lot Improvemen
45.Waterfront A
46.Lobster Pound

Inspection Witnessed By:

X Date

No./Date	Description	Date Insp.

Notes:

Hancock

Hancock

Map Lot 223-009-003 | Account 1841 | Location 49 WHETEM LANE | Card 1 Of 1 | 11/30/2020

Building Style		
0.Uncoded	4.Cape	8.Log
1.Conv.	5.Garrison	9.Other
2.Ranch	6.Colonial	10.Dutch C
3.R Ranch	7.Contemp	11.Farmhou

Dwelling Units
Other Units

Stories		
1.1	4.1.5	7.3.5
2.2	5.1.75	8.
3.3	6.2.5	9.

Exterior Walls		
0.Uncoded	4.Asbestos	8.Stone
1.Wood	5.Stucco	9.Other
2.Vin/Al	6.Brick Ve	10.Concret
3.Compos.	7.Solid Br	12.

Roof Surface		
1.Asphalt	4.Composit	7.
2.Slate	5.Wood	8.
3.Metal	6.Other	9.

SF Masonry Trim
OPEN-3-CUSTOM
OPEN-4-CUSTOM
Year Built
Year Remodeled

Foundation		
1.Concrete	4.Wood	7.
2.C Block	5.Slab	8.
3.Br/Stone	6.Piers	9.

Basement		
1.1/4 Bmt	4.Full Bmt	7.
2.1/2 Bmt	5.None	8.
3.3/4 Bmt	6.	9.None

Bsmt Gar # Cars

Wet Basement		
1.Dry	4.	7.
2.Damp	5.	8.
3.Wet	6.	9.

SF Bsmt Living
Fin Bsmt Grade
OPEN-5-CUSTOMIZE

Heat Type **100%**		
0.Uncoded	4.Steam	8.Fl/Wall
1.HWBB	5.FWA	9.No Heat
2.HWCI	6.GravWA	10.Radiabt
3.H Pump	7.Electric	12.

Cool Type **0%**		
1.Refrig	4.W&C Air	7.
2.Evapor	5.	8.
3.H Pump	6.	9.None

Kitchen Style		
1.Modern	4.Obsolete	7.
2.Typical	5.	8.
3.Old Type	6.	9.None

Bath(s) Style		
1.Modern	4.Obsolete	7.
2.Typical	5.	8.
3.Old Type	6.	9.None

Rooms
Bedrooms
Full Baths
Half Baths
Addn Fixtures
Fireplaces

TRIO Software
A Division of Harris Computer Systems

Layout		
1.Typical	4.	7.
2.Inadeq	5.	8.
3.Horrid	6.	9.

Attic		
1.1/4 Fin	4.Full Fin	7.
2.1/2 Fin	5.Fl/Stair	8.
3.3/4 Fin	6.	9.None

Insulation		
1.Full	4.Minimal	7.
2.Heavy	5.Partial	8.
3.Capped	6.	9.None

Unfinished %

Grade & Factor		
1.E Grade	4.B Grade	7.AAA Grad
2.D Grade	5.A Grade	8.SC Grade
3.C Grade	6.AA Grade	9.Same

SQFT (Footprint)

Condition		
1.Poor	4.Avg	7.V G
2.Fair	5.Avg+	8.Exc
3.Avg-	6.Good	9.Same

Phys. % Good
Funct. % Good

Functional Code		
1.Incomp	4.Delap	7.Seasonal
2.O-Built	5.Bsmt	8.
3.Fire	6.2014 ADJ	9.None

Econ. % Good

Economic Code		
0.None	3.No Power	7.
1.Location	4.Generate	8.
2.Encroach	9.None	9.

Entrance Code **0**		
1.Interior	4.Vacant	7.
2.Refusal	5.Estimate	8.
3.Informed	6.	9.

Information Code **0**		
1.Owner	4.Agent	7.
2.Relative	5.Estimate	8.
3.Tenant	6.Other	9.

Date Inspected

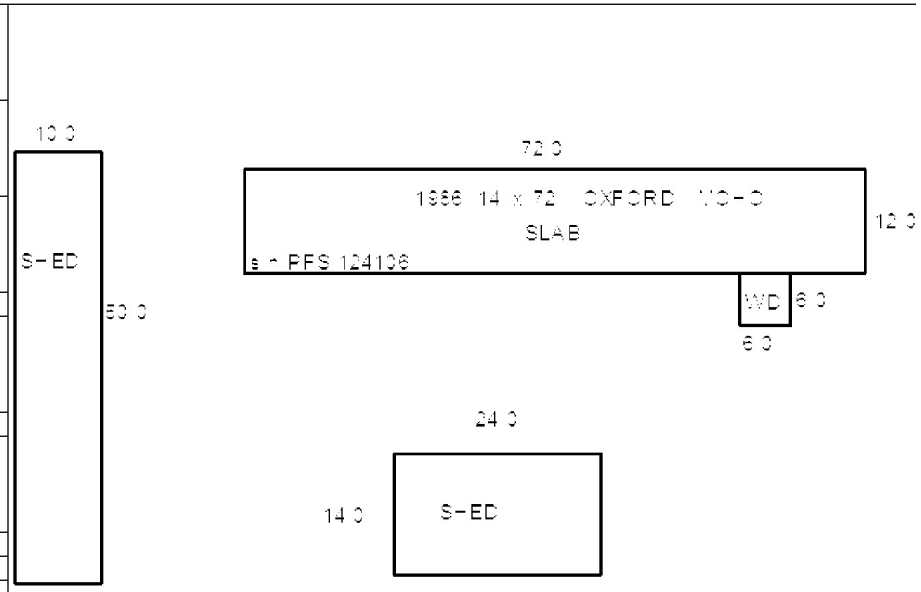

Additions, Outbuildings & Improvements

Type	Year	Units	Grade	Cond	Phys.	Funct.	Sound Value
998 14 Mobile Home	1986	14x72	4 100	4	0 %	100 %	
24 Frame Shed	1980	500	3 100	4	0 %	100 %	
68 Wood Deck	0	36	0 0	0	0 %	100 %	
60 Concrete Slab	1986	1008	3 100	4	0 %	100 %	
24 Frame Shed	2013	336	2 100	4	0 %	100 %	
					%	%	
					%	%	
					%	%	
					%	%	
					%	%	

1.One Story Fram
2.Two Story Fram
3.Three Story Fr
4.1 & 1/2 Story
5.1 & 3/4 Story
6.2 & 1/2 Story
21.Open Frame Por
22.Encl Frame Por
23.Frame Garage
24.Frame Shed
25.Frame Bay Wind
26.1SFr Overhang
27.Unfin Basement
28.Unfinished Att
29.Finished Attic

Map Lot 223-009-006 | Account 2255 | Location 11 WHETEM LANE | Card 1 Of 1 | 11/30/2020

WHITMORE, WAYNE A
PO BOX 4
EDDINGTON ME 04428

B6914P671

Property Data

Neighborhood **56 Neighborhood 56**

Tree Growth Year **0**

TREE GROWTH RECERTIFY

STATE SALE CODE

Zone/Land Use **11 Residential**

Secondary Zone

Topography

1.Level	4.Below St	7.
2.Rolling	5.Low	8.
3.Above St	6.Swampy	9.

Utilities

1.Public	4.Dr Well	7.Cesspool
2.Water	5.Dug Well	8.
3.Sewer	6.Septic	9.None

Street

1.Paved	4.Proposed	7.
2.Semi Imp	5.	8.
3.Gravel	6.	9.None

REVIEW STRUCTURE YEAR **0**

RENTAL? 0=NO 1=YES **0**

Sale Data

Sale Date

Price

Sale Type

1.Land	4.Mobile	7.
2.L & B	5.Other	8.
3.Building	6.	9.

Financing

1.Convent	4.Seller	7.
2.FHA/VA	5.Private	8.
3.Assumed	6.Cash	9.Unknown

Validity

1.Valid	4.Split	7.Changes
2.Related	5.Partial	8.Other
3.Distress	6.Exempt	9.Fr Ffclse

Verified

1.Buyer	4.Agent	7.Family
2.Seller	5.Pub Rec	8.Other
3.Lender	6.MLS	9.

Assessment Record

Year	Land	Buildings	Exempt	Total
2020	25,700	55,200	0	80,900

Land Data

Front Foot	Type	Effective Frontage	Effective Depth	Influence Factor	Influence Code
11.Regular Lot				%	
12.Delta Triangle				%	
13.Nabla Triangle				%	
14.Rear Land				%	
15.Miscellaneous				%	
				%	
				%	

Square Foot	Square Feet		
16.Regular Lot		%	
17.Secondary Lot		%	
18.Excess Land		%	
19.Condominium		%	
20.Miscellaneous		%	
		%	
		%	

Fract. Acre	Acreage/Sites			
21.Homesite (Frac	21	1.00	100 %	0
22.Baselot (Fract	24	0.99	100 %	0
23.Misc (Fract)			%	
Acres			%	
24.Excess Acres 1			%	
25.Excess Acres 5			%	
26.Excess Acres 2			%	
27.Excess Acres 5			%	
28.Excess Acres 1			%	
29.Excess acres			%	

Total Acreage 1.99

Influence Codes

1.Unimproved
2.Excess Frtg
3.Topography
4.Size/Shape
5.Access
6.Restriction
7.Corner Infl
8.Environment
9.Fract Share
Acres
30.Industrial Sit
31.Working Waterf
32.Cultivated Cro
33.Pasture
34.Softwood (Farm
35.Mixed Wood (Fa
36.Hardwood (Farm
37.Softwood
38.Mixed Wood
39.Hardwood
40.Wasteland
41.Gravel Pit
42.Mobile Home Si
43.Location Base
44.Lot Improvemen
45.Waterfront A
46.Lobster Pound

Inspection Witnessed By:

X Date

No./Date	Description	Date Insp.

Notes:

Hancock

Hancock

Map Lot 223-009-006 | Account 2255 | Location 11 WHETEM LANE | Card 1 Of 1 | 11/30/2020

Building Style **1 Conventional**		
0.Uncoded	4.Cape	8.Log
1.Conv.	5.Garrison	9.Other
2.Ranch	6.Colonial	10.Dutch C
3.R Ranch	7.Contemp	11.Farmhou
Dwelling Units **1**		
Other Units **0**		
Stories **1 One Story**		
1.1	4.1.5	7.3.5
2.2	5.1.75	8.
3.3	6.2.5	9.
Exterior Walls **2 Vinyl/Aluminum**		
0.Uncoded	4.Asbestos	8.Stone
1.Wood	5.Stucco	9.Other
2.Vin/Al	6.Brick Ve	10.Concret
3.Compos.	7.Solid Br	12.
Roof Surface **1 Asphalt Shingles**		
1.Asphalt	4.Composit	7.
2.Slate	5.Wood	8.
3.Metal	6.Other	9.
SF Masonry Trim **0**		
OPEN-3-CUSTOM **0**		
OPEN-4-CUSTOM **0**		
Year Built **1990**		
Year Remodeled **0**		
Foundation **1 Concrete**		
1.Concrete	4.Wood	7.
2.C Block	5.Slab	8.
3.Br/Stone	6.Piers	9.
Basement **9 No Basement**		
1.1/4 Bmt	4.Full Bmt	7.
2.1/2 Bmt	5.None	8.
3.3/4 Bmt	6.	9.None
Bsmt Gar # Cars **0**		
Wet Basement **9 No Basement**		
1.Dry	4.	7.
2.Damp	5.	8.
3.Wet	6.	9.

SF Bsmt Living **0**		
Fin Bsmt Grade **0 0**		
OPEN-5-CUSTOMIZE **0**		
Heat Type **100% 5 Forced Warm Air**		
0.Uncoded	4.Steam	8.Fl/Wall
1.HWBB	5.FWA	9.No Heat
2.HWCI	6.GravWA	10.Radiabt
3.H Pump	7.Electric	12.
Cool Type **0% 9 None**		
1.Refrig	4.W&C Air	7.
2.Evapor	5.	8.
3.H Pump	6.	9.None
Kitchen Style **2 Typical**		
1.Modern	4.Obsolete	7.
2.Typical	5.	8.
3.Old Type	6.	9.None
Bath(s) Style **2 Typical Bath(s)**		
1.Modern	4.Obsolete	7.
2.Typical	5.	8.
3.Old Type	6.	9.None
# Rooms **4**		
# Bedrooms **2**		
# Full Baths **1**		
# Half Baths **0**		
# Addn Fixtures **0**		
# Fireplaces **0**		

TRIO Software
A Division of Harris Computer Systems

Layout **1 Typical**		
1.Typical	4.	7.
2.Inadeq	5.	8.
3.Horrid	6.	9.
Attic **9 None**		
1.1/4 Fin	4.Full Fin	7.
2.1/2 Fin	5.Fl/Stair	8.
3.3/4 Fin	6.	9.None
Insulation **1 Full**		
1.Full	4.Minimal	7.
2.Heavy	5.Partial	8.
3.Capped	6.	9.None
Unfinished % **0%**		
Grade & Factor **2 Fair 100%**		
1.E Grade	4.B Grade	7.AAA Grad
2.D Grade	5.A Grade	8.SC Grade
3.C Grade	6.AA Grade	9.Same
SQFT (Footprint) **768**		
Condition **4 Average**		
1.Poor	4.Avg	7.V G
2.Fair	5.Avg+	8.Exc
3.Avg-	6.Good	9.Same
Phys. % Good **0%**		
Funct. % Good **90%**		
Functional Code **6 2014 ADJUSTMENT**		
1.Incomp	4.Delap	7.Seasonal
2.O-Built	5.Bsmt	8.
3.Fire	6.2014 ADJ	9.None
Econ. % Good **100%**		
Economic Code **None**		
0.None	3.No Power	7.
1.Location	4.Generate	8.
2.Encroach	9.None	9.
Entrance Code **0**		
1.Interior	4.Vacant	7.
2.Refusal	5.Estimate	8.
3.Informed	6.	9.
Information Code **0**		
1.Owner	4.Agent	7.
2.Relative	5.Estimate	8.
3.Tenant	6.Other	9.

Date Inspected

Additions, Outbuildings & Improvements

Type	Year	Units	Grade	Cond	Phys.	Funct.	Sound Value
					%	%	
					%	%	
					%	%	
					%	%	
					%	%	
					%	%	
					%	%	
					%	%	
					%	%	
					%	%	

1.One Story Fram
2.Two Story Fram
3.Three Story Fr
4.1 & 1/2 Story
5.1 & 3/4 Story
6.2 & 1/2 Story
21.Open Frame Por
22.Encl Frame Por
23.Frame Garage
24.Frame Shed
25.Frame Bay Wind
26.1SFr Overhang
27.Unfin Basement
28.Unfinished Att
29.Finished Attic

Map Lot 223-009-008 Account 2251 Location CHURCH LANE Card 1 Of 1 11/30/2020

MAIGA, RACHEL M
5 BON OAK COURT
REISTERTOWN MD 21136

B6914P688

Property Data

Neighborhood **56 Neighborhood 56**

Tree Growth Year **0**

TREE GROWTH RECERTIFY

STATE SALE CODE

Zone/Land Use **11 Residential**

Secondary Zone

Topography

1.Level	4.Below St	7.
2.Rolling	5.Low	8.
3.Above St	6.Swampy	9.

Utilities

1.Public	4.Dr Well	7.Cesspool
2.Water	5.Dug Well	8.
3.Sewer	6.Septic	9.None

Street

1.Paved	4.Proposed	7.
2.Semi Imp	5.	8.
3.Gravel	6.	9.None

REVIEW STRUCTURE YEAR **0**

RENTAL? 0=NO 1=YES **0**

Sale Data

Sale Date

Price

Sale Type

1.Land	4.Mobile	7.
2.L & B	5.Other	8.
3.Building	6.	9.

Financing

1.Convent	4.Seller	7.
2.FHA/VA	5.Private	8.
3.Assumed	6.Cash	9.Unknown

Validity

1.Valid	4.Split	7.Changes
2.Related	5.Partial	8.Other
3.Distress	6.Exempt	9.Fr Ffclse

Verified

1.Buyer	4.Agent	7.Family
2.Seller	5.Pub Rec	8.Other
3.Lender	6.MLS	9.

Assessment Record

Year	Land	Buildings	Exempt	Total
2020	30,100	0	0	30,100

Land Data

Front Foot	Type	Effective Frontage	Effective Depth	Influence Factor	Influence Code
11.Regular Lot				%	
12.Delta Triangle				%	
13.Nabla Triangle				%	
14.Rear Land				%	
15.Miscellaneous				%	
				%	
				%	

Square Foot		Square Feet		
16.Regular Lot			%	
17.Secondary Lot			%	
18.Excess Land			%	
19.Condominium			%	
20.Miscellaneous			%	
			%	
			%	

Fract. Acre	Acreage/Sites			
21.Homesite (Frac	21	1.00	100 %	0
22.Baselot (Fract	24	4.00	100 %	0
23.Misc (Fract)	25	1.53	100 %	0
Acres			%	
24.Excess Acres 1			%	
25.Excess Acres 5			%	
26.Excess Acres 2			%	
27.Excess Acres 5			%	
28.Excess Acres 1				
29.Excess acres				

Total Acreage 6.53

Influence Codes

1.Unimproved
2.Excess Frtg
3.Topography
4.Size/Shape
5.Access
6.Restriction
7.Corner Infl
8.Environment
9.Fract Share
Acres
30.Industrial Sit
31.Working Waterf
32.Cultivated Cro
33.Pasture
34.Softwood (Farm
35.Mixed Wood (Fa
36.Hardwood (Farm
37.Softwood
38.Mixed Wood
39.Hardwood
40.Wasteland
41.Gravel Pit
42.Mobile Home Si
43.Location Base
44.Lot Improvemen
45.Waterfront A
46.Lobster Pound

Inspection Witnessed By:

X Date

No./Date	Description	Date Insp.

Notes:

Hancock

Hancock

Map Lot 223-009-008 | Account 2251 | Location CHURCH LANE | Card 1 Of 1 | 11/30/2020

Building Style		
0.Uncoded	4.Cape	8.Log
1.Conv.	5.Garrison	9.Other
2.Ranch	6.Colonial	10.Dutch C
3.R Ranch	7.Contemp	11.Farmhou

Dwelling Units

Other Units

Stories		
1.1	4.1.5	7.3.5
2.2	5.1.75	8.
3.3	6.2.5	9.

Exterior Walls		
0.Uncoded	4.Asbestos	8.Stone
1.Wood	5.Stucco	9.Other
2.Vin/Al	6.Brick Ve	10.Concret
3.Compos.	7.Solid Br	12.

Roof Surface		
1.Asphalt	4.Composit	7.
2.Slate	5.Wood	8.
3.Metal	6.Other	9.

SF Masonry Trim

OPEN-3-CUSTOM

OPEN-4-CUSTOM

Year Built

Year Remodeled

Foundation		
1.Concrete	4.Wood	7.
2.C Block	5.Slab	8.
3.Br/Stone	6.Piers	9.

Basement		
1.1/4 Bmt	4.Full Bmt	7.
2.1/2 Bmt	5.None	8.
3.3/4 Bmt	6.	9.None

Bsmt Gar # Cars

Wet Basement		
1.Dry	4.	7.
2.Damp	5.	8.
3.Wet	6.	9.

SF Bsmt Living

Fin Bsmt Grade

OPEN-5-CUSTOMIZE

Heat Type **100%**		
0.Uncoded	4.Steam	8.Fl/Wall
1.HWBB	5.FWA	9.No Heat
2.HWCI	6.GravWA	10.Radiabt
3.H Pump	7.Electric	12.

Cool Type **0%**		
1.Refrig	4.W&C Air	7.
2.Evapor	5.	8.
3.H Pump	6.	9.None

Kitchen Style		
1.Modern	4.Obsolete	7.
2.Typical	5.	8.
3.Old Type	6.	9.None

Bath(s) Style		
1.Modern	4.Obsolete	7.
2.Typical	5.	8.
3.Old Type	6.	9.None

Rooms

Bedrooms

Full Baths

Half Baths

Addn Fixtures

Fireplaces

TRIO Software
A Division of Harris Computer Systems

Layout		
1.Typical	4.	7.
2.Inadeq	5.	8.
3.Horrid	6.	9.

Attic		
1.1/4 Fin	4.Full Fin	7.
2.1/2 Fin	5.Fl/Stair	8.
3.3/4 Fin	6.	9.None

Insulation		
1.Full	4.Minimal	7.
2.Heavy	5.Partial	8.
3.Capped	6.	9.None

Unfinished %

Grade & Factor		
1.E Grade	4.B Grade	7.AAA Grad
2.D Grade	5.A Grade	8.SC Grade
3.C Grade	6.AA Grade	9.Same

SQFT (Footprint)

Condition		
1.Poor	4.Avg	7.V G
2.Fair	5.Avg+	8.Exc
3.Avg-	6.Good	9.Same

Phys. % Good

Funct. % Good

Functional Code		
1.Incomp	4.Delap	7.Seasonal
2.O-Built	5.Bsmt	8.
3.Fire	6.2014 ADJ	9.None

Econ. % Good

Economic Code		
0.None	3.No Power	7.
1.Location	4.Generate	8.
2.Encroach	9.None	9.

Entrance Code **0**		
1.Interior	4.Vacant	7.
2.Refusal	5.Estimate	8.
3.Informed	6.	9.

Information Code **0**		
1.Owner	4.Agent	7.
2.Relative	5.Estimate	8.
3.Tenant	6.Other	9.

Date Inspected

Additions, Outbuildings & Improvements

Type	Year	Units	Grade	Cond	Phys.	Funct.	Sound Value
					%	%	
					%	%	
					%	%	
					%	%	
					%	%	
					%	%	
					%	%	
					%	%	
					%	%	
					%	%	

1.One Story Fram
2.Two Story Fram
3.Three Story Fr
4.1 & 1/2 Story
5.1 & 3/4 Story
6.2 & 1/2 Story
21.Open Frame Por
22.Encl Frame Por
23.Frame Garage
24.Frame Shed
25.Frame Bay Wind
26.1SFr Overhang
27.Unfin Basement
28.Unfinished Att
29.Finished Attic

Map Lot 223-009-009 Account 2252 Location CHURCH LANE Card 1 Of 1 11/30/2020

PERKINS, ETTA E.
65 RANGE ROAD
BLUE HILL ME 04614

B6914P691 B6919P783

Property Data

Neighborhood **56 Neighborhood 56**

Tree Growth Year **0**

TREE GROWTH RECERTIFY

STATE SALE CODE

Zone/Land Use **11 Residential**

Secondary Zone

Topography

1.Level	4.Below St	7.
2.Rolling	5.Low	8.
3.Above St	6.Swampy	9.

Utilities

1.Public	4.Dr Well	7.Cesspool
2.Water	5.Dug Well	8.
3.Sewer	6.Septic	9.None

Street

1.Paved	4.Proposed	7.
2.Semi Imp	5.	8.
3.Gravel	6.	9.None

REVIEW STRUCTURE YEAR **0**

RENTAL? 0=NO 1=YES **0**

Sale Data

Sale Date

Price

Sale Type

1.Land	4.Mobile	7.
2.L & B	5.Other	8.
3.Building	6.	9.

Financing

1.Convent	4.Seller	7.
2.FHA/VA	5.Private	8.
3.Assumed	6.Cash	9.Unknown

Validity

1.Valid	4.Split	7.Changes
2.Related	5.Partial	8.Other
3.Distress	6.Exempt	9.Fr Ffclse

Verified

1.Buyer	4.Agent	7.Family
2.Seller	5.Pub Rec	8.Other
3.Lender	6.MLS	9.

Assessment Record

Year	Land	Buildings	Exempt	Total
2020	32,700	1,600	0	34,300

Land Data

Front Foot	Type	Effective Frontage	Effective Depth	Influence Factor	Influence Code
11.Regular Lot				%	
12.Delta Triangle				%	
13.Nabla Triangle				%	
14.Rear Land				%	
15.Miscellaneous				%	
				%	
				%	

Square Foot		Square Feet		
16.Regular Lot			%	
17.Secondary Lot			%	
18.Excess Land			%	
19.Condominium			%	
20.Miscellaneous			%	
			%	
			%	

Fract. Acre		Acreage/Sites		
21.Homesite (Frac	21	1.00	100 %	0
22.Baselot (Fract	24	4.00	100 %	0
23.Misc (Fract)	25	3.46	100 %	0
Acres			%	
24.Excess Acres 1			%	
25.Excess Acres 5			%	
26.Excess Acres 2			%	
27.Excess Acres 5			%	
28.Excess Acres 1				
29.Excess acres				

Total Acreage 8.46

Influence Codes

1.Unimproved
2.Excess Frtg
3.Topography
4.Size/Shape
5.Access
6.Restriction
7.Corner Infl
8.Environment
9.Fract Share
Acres
30.Industrial Sit
31.Working Waterf
32.Cultivated Cro
33.Pasture
34.Softwood (Farm
35.Mixed Wood (Fa
36.Hardwood (Farm
37.Softwood
38.Mixed Wood
39.Hardwood
40.Wasteland
41.Gravel Pit
42.Mobile Home Si
43.Location Base
44.Lot Improvemen
45.Waterfront A
46.Lobster Pound

Inspection Witnessed By:

X Date

No./Date	Description	Date Insp.

Notes:

Hancock

Hancock

Map Lot 223-009-009 | Account 2252 | Location CHURCH LANE | Card 1 Of 1 | 11/30/2020

Building Style		
0.Uncoded	4.Cape	8.Log
1.Conv.	5.Garrison	9.Other
2.Ranch	6.Colonial	10.Dutch C
3.R Ranch	7.Contemp	11.Farmhou

Dwelling Units

Other Units

Stories		
1.1	4.1.5	7.3.5
2.2	5.1.75	8.
3.3	6.2.5	9.

Exterior Walls		
0.Uncoded	4.Asbestos	8.Stone
1.Wood	5.Stucco	9.Other
2.Vin/Al	6.Brick Ve	10.Concret
3.Compos.	7.Solid Br	12.

Roof Surface		
1.Asphalt	4.Composit	7.
2.Slate	5.Wood	8.
3.Metal	6.Other	9.

SF Masonry Trim

OPEN-3-CUSTOM

OPEN-4-CUSTOM

Year Built

Year Remodeled

Foundation		
1.Concrete	4.Wood	7.
2.C Block	5.Slab	8.
3.Br/Stone	6.Piers	9.

Basement		
1.1/4 Bmt	4.Full Bmt	7.
2.1/2 Bmt	5.None	8.
3.3/4 Bmt	6.	9.None

Bsmt Gar # Cars

Wet Basement		
1.Dry	4.	7.
2.Damp	5.	8.
3.Wet	6.	9.

SF Bsmt Living

Fin Bsmt Grade

OPEN-5-CUSTOMIZE

Heat Type **100%**		
0.Uncoded	4.Steam	8.Fl/Wall
1.HWBB	5.FWA	9.No Heat
2.HWCI	6.GravWA	10.Radiabt
3.H Pump	7.Electric	12.

Cool Type **0%**		
1.Refrig	4.W&C Air	7.
2.Evapor	5.	8.
3.H Pump	6.	9.None

Kitchen Style		
1.Modern	4.Obsolete	7.
2.Typical	5.	8.
3.Old Type	6.	9.None

Bath(s) Style		
1.Modern	4.Obsolete	7.
2.Typical	5.	8.
3.Old Type	6.	9.None

Rooms

Bedrooms

Full Baths

Half Baths

Addn Fixtures

Fireplaces

TRIO Software
A Division of Harris Computer Systems

Layout		
1.Typical	4.	7.
2.Inadeq	5.	8.
3.Horrid	6.	9.

Attic		
1.1/4 Fin	4.Full Fin	7.
2.1/2 Fin	5.Fl/Stair	8.
3.3/4 Fin	6.	9.None

Insulation		
1.Full	4.Minimal	7.
2.Heavy	5.Partial	8.
3.Capped	6.	9.None

Unfinished %

Grade & Factor		
1.E Grade	4.B Grade	7.AAA Grad
2.D Grade	5.A Grade	8.SC Grade
3.C Grade	6.AA Grade	9.Same

SQFT (Footprint)

Condition		
1.Poor	4.Avg	7.V G
2.Fair	5.Avg+	8.Exc
3.Avg-	6.Good	9.Same

Phys. % Good

Funct. % Good

Functional Code		
1.Incomp	4.Delap	7.Seasonal
2.O-Built	5.Bsmt	8.
3.Fire	6.2014 ADJ	9.None

Econ. % Good

Economic Code		
0.None	3.No Power	7.
1.Location	4.Generate	8.
2.Encroach	9.None	9.

Entrance Code **0**		
1.Interior	4.Vacant	7.
2.Refusal	5.Estimate	8.
3.Informed	6.	9.

Information Code **0**		
1.Owner	4.Agent	7.
2.Relative	5.Estimate	8.
3.Tenant	6.Other	9.

Date Inspected

Additions, Outbuildings & Improvements

Type	Year	Units	Grade	Cond	Phys.	Funct.	Sound Value
523 SAWMILL	1980	640	3 100	4	0 %	100 %	
					%	%	
					%	%	
					%	%	
					%	%	
					%	%	
					%	%	
					%	%	
					%	%	
					%	%	

1.One Story Fram
2.Two Story Fram
3.Three Story Fr
4.1 & 1/2 Story
5.1 & 3/4 Story
6.2 & 1/2 Story
21.Open Frame Por
22.Encl Frame Por
23.Frame Garage
24.Frame Shed
25.Frame Bay Wind
26.1SFr Overhang
27.Unfin Basement
28.Unfinished Att
29.Finished Attic

Map Lot 223-009-010 Account 2253 Location SERENDIPITY LANE Card 1 Of 1 11/30/2020

WHITMORE, MICHAEL W
PO BOX 2114
ALBANY TX 76430

B6914P676

Property Data

Neighborhood **56 Neighborhood 56**

Tree Growth Year **0**

TREE GROWTH RECERTIFY

STATE SALE CODE

Zone/Land Use **11 Residential**

Secondary Zone

Topography

1.Level	4.Below St	7.
2.Rolling	5.Low	8.
3.Above St	6.Swampy	9.

Utilities

1.Public	4.Dr Well	7.Cesspool
2.Water	5.Dug Well	8.
3.Sewer	6.Septic	9.None

Street

1.Paved	4.Proposed	7.
2.Semi Imp	5.	8.
3.Gravel	6.	9.None

REVIEW STRUCTURE YEAR **0**

RENTAL? 0=NO 1=YES **0**

Sale Data

Sale Date

Price

Sale Type

1.Land	4.Mobile	7.
2.L & B	5.Other	8.
3.Building	6.	9.

Financing

1.Convent	4.Seller	7.
2.FHA/VA	5.Private	8.
3.Assumed	6.Cash	9.Unknown

Validity

1.Valid	4.Split	7.Changes
2.Related	5.Partial	8.Other
3.Distress	6.Exempt	9.Fr Ffclse

Verified

1.Buyer	4.Agent	7.Family
2.Seller	5.Pub Rec	8.Other
3.Lender	6.MLS	9.

Assessment Record

Year	Land	Buildings	Exempt	Total
2020	54,900	0	0	54,900

Land Data

Front Foot	Type	Effective Frontage	Effective Depth	Influence Factor	Influence Code
11.Regular Lot				%	
12.Delta Triangle				%	
13.Nabla Triangle				%	
14.Rear Land				%	
15.Miscellaneous				%	
				%	
				%	

Square Foot		Square Feet		
16.Regular Lot			%	
17.Secondary Lot			%	
18.Excess Land			%	
19.Condominium			%	
20.Miscellaneous			%	
			%	
			%	

Fract. Acre	Acreage/Sites			
21.Homesite (Frac	21	1.00	100 %	0
22.Baselot (Fract	24	4.00	100 %	0
23.Misc (Fract)	25	19.94	100 %	0
Acres			%	
24.Excess Acres 1			%	
25.Excess Acres 5			%	
26.Excess Acres 2			%	
27.Excess Acres 5			%	
28.Excess Acres 1				
29.Excess acres				

Total Acreage 24.94

Influence Codes

1.Unimproved
2.Excess Frtg
3.Topography
4.Size/Shape
5.Access
6.Restriction
7.Corner Infl
8.Environment
9.Fract Share
Acres
30.Industrial Sit
31.Working Waterf
32.Cultivated Cro
33.Pasture
34.Softwood (Farm
35.Mixed Wood (Fa
36.Hardwood (Farm
37.Softwood
38.Mixed Wood
39.Hardwood
40.Wasteland
41.Gravel Pit
42.Mobile Home Si
43.Location Base
44.Lot Improvemen
45.Waterfront A
46.Lobster Pound

Inspection Witnessed By:

X Date

No./Date	Description	Date Insp.

Notes:

Hancock

Hancock

Map Lot 223-009-010 | Account 2253 | Location SERENDIPITY LANE | Card 1 Of 1 | 11/30/2020

Building Style		
0.Uncoded	4.Cape	8.Log
1.Conv.	5.Garrison	9.Other
2.Ranch	6.Colonial	10.Dutch C
3.R Ranch	7.Contemp	11.Farmhou

Dwelling Units
Other Units

Stories		
1.1	4.1.5	7.3.5
2.2	5.1.75	8.
3.3	6.2.5	9.

Exterior Walls		
0.Uncoded	4.Asbestos	8.Stone
1.Wood	5.Stucco	9.Other
2.Vin/Al	6.Brick Ve	10.Concret
3.Compos.	7.Solid Br	12.

Roof Surface		
1.Asphalt	4.Composit	7.
2.Slate	5.Wood	8.
3.Metal	6.Other	9.

SF Masonry Trim
OPEN-3-CUSTOM
OPEN-4-CUSTOM
Year Built
Year Remodeled

Foundation		
1.Concrete	4.Wood	7.
2.C Block	5.Slab	8.
3.Br/Stone	6.Piers	9.

Basement		
1.1/4 Bmt	4.Full Bmt	7.
2.1/2 Bmt	5.None	8.
3.3/4 Bmt	6.	9.None

Bsmt Gar # Cars

Wet Basement		
1.Dry	4.	7.
2.Damp	5.	8.
3.Wet	6.	9.

SF Bsmt Living
Fin Bsmt Grade
OPEN-5-CUSTOMIZE

Heat Type **100%**		
0.Uncoded	4.Steam	8.Fl/Wall
1.HWBB	5.FWA	9.No Heat
2.HWCI	6.GravWA	10.Radiabt
3.H Pump	7.Electric	12.

Cool Type **0%**		
1.Refrig	4.W&C Air	7.
2.Evapor	5.	8.
3.H Pump	6.	9.None

Kitchen Style		
1.Modern	4.Obsolete	7.
2.Typical	5.	8.
3.Old Type	6.	9.None

Bath(s) Style		
1.Modern	4.Obsolete	7.
2.Typical	5.	8.
3.Old Type	6.	9.None

Rooms
Bedrooms
Full Baths
Half Baths
Addn Fixtures
Fireplaces

TRIO Software
A Division of Harris Computer Systems

Layout		
1.Typical	4.	7.
2.Inadeq	5.	8.
3.Horrid	6.	9.

Attic		
1.1/4 Fin	4.Full Fin	7.
2.1/2 Fin	5.Fl/Stair	8.
3.3/4 Fin	6.	9.None

Insulation		
1.Full	4.Minimal	7.
2.Heavy	5.Partial	8.
3.Capped	6.	9.None

Unfinished %

Grade & Factor		
1.E Grade	4.B Grade	7.AAA Grad
2.D Grade	5.A Grade	8.SC Grade
3.C Grade	6.AA Grade	9.Same

SQFT (Footprint)

Condition		
1.Poor	4.Avg	7.V G
2.Fair	5.Avg+	8.Exc
3.Avg-	6.Good	9.Same

Phys. % Good
Funct. % Good

Functional Code		
1.Incomp	4.Delap	7.Seasonal
2.O-Built	5.Bsmt	8.
3.Fire	6.2014 ADJ	9.None

Econ. % Good

Economic Code		
0.None	3.No Power	7.
1.Location	4.Generate	8.
2.Encroach	9.None	9.

Entrance Code **0**		
1.Interior	4.Vacant	7.
2.Refusal	5.Estimate	8.
3.Informed	6.	9.

Information Code **0**		
1.Owner	4.Agent	7.
2.Relative	5.Estimate	8.
3.Tenant	6.Other	9.

Date Inspected

Additions, Outbuildings & Improvements

Type	Year	Units	Grade	Cond	Phys.	Funct.	Sound Value
					%	%	
					%	%	
					%	%	
					%	%	
					%	%	
					%	%	
					%	%	
					%	%	
					%	%	
					%	%	

1.One Story Fram
2.Two Story Fram
3.Three Story Fr
4.1 & 1/2 Story
5.1 & 3/4 Story
6.2 & 1/2 Story
21.Open Frame Por
22.Encl Frame Por
23.Frame Garage
24.Frame Shed
25.Frame Bay Wind
26.1SFr Overhang
27.Unfin Basement
28.Unfinished Att
29.Finished Attic

Map Lot 223-009-011 Account 2254 Location WHETEM LANE Card 1 Of 1 11/30/2020

WHITMORE, WAYNE A
PO BOX 4
EDDINGTON ME 04428

B6914P671

Property Data

Neighborhood **56 Neighborhood 56**

Tree Growth Year **0**

TREE GROWTH RECERTIFY

STATE SALE CODE

Zone/Land Use **11 Residential**

Secondary Zone

Topography

1.Level	4.Below St	7.
2.Rolling	5.Low	8.
3.Above St	6.Swampy	9.

Utilities

1.Public	4.Dr Well	7.Cesspool
2.Water	5.Dug Well	8.
3.Sewer	6.Septic	9.None

Street

1.Paved	4.Proposed	7.
2.Semi Imp	5.	8.
3.Gravel	6.	9.None

REVIEW STRUCTURE YEAR **0**

RENTAL? 0=NO 1=YES **0**

Sale Data

Sale Date

Price

Sale Type

1.Land	4.Mobile	7.
2.L & B	5.Other	8.
3.Building	6.	9.

Financing

1.Convent	4.Seller	7.
2.FHA/VA	5.Private	8.
3.Assumed	6.Cash	9.Unknown

Validity

1.Valid	4.Split	7.Changes
2.Related	5.Partial	8.Other
3.Distress	6.Exempt	9.Fr Ffclse

Verified

1.Buyer	4.Agent	7.Family
2.Seller	5.Pub Rec	8.Other
3.Lender	6.MLS	9.

Assessment Record

Year	Land	Buildings	Exempt	Total
2020	27,700	0	0	27,700

Land Data

Front Foot	Type	Effective Frontage	Effective Depth	Influence Factor	Influence Code
11.Regular Lot				%	
12.Delta Triangle				%	
13.Nabla Triangle				%	
14.Rear Land				%	
15.Miscellaneous				%	
				%	
				%	

Square Foot		Square Feet		
16.Regular Lot			%	
17.Secondary Lot			%	
18.Excess Land			%	
19.Condominium			%	
20.Miscellaneous			%	
			%	
			%	

Fract. Acre	Acreage/Sites			
21.Homesite (Frac	21	1.00	100 %	0
22.Baselot (Fract	24	3.66	100 %	0
23.Misc (Fract)			%	
Acres			%	
24.Excess Acres 1			%	
25.Excess Acres 5			%	
26.Excess Acres 2			%	
27.Excess Acres 5			%	
28.Excess Acres 1			%	
29.Excess acres			%	

Total Acreage 4.66

Influence Codes

1.Unimproved
2.Excess Frtg
3.Topography
4.Size/Shape
5.Access
6.Restriction
7.Corner Infl
8.Environment
9.Fract Share
Acres
30.Industrial Sit
31.Working Waterf
32.Cultivated Cro
33.Pasture
34.Softwood (Farm
35.Mixed Wood (Fa
36.Hardwood (Farm
37.Softwood
38.Mixed Wood
39.Hardwood
40.Wasteland
41.Gravel Pit
42.Mobile Home Si
43.Location Base
44.Lot Improvemen
45.Waterfront A
46.Lobster Pound

Inspection Witnessed By:

X Date

No./Date	Description	Date Insp.

Notes:

Hancock

Hancock

Map Lot 223-009-011 | Account 2254 | Location WHETEM LANE | Card 1 Of 1 | 11/30/2020

Building Style		
0.Uncoded	4.Cape	8.Log
1.Conv.	5.Garrison	9.Other
2.Ranch	6.Colonial	10.Dutch C
3.R Ranch	7.Contemp	11.Farmhou

Dwelling Units
Other Units

Stories		
1.1	4.1.5	7.3.5
2.2	5.1.75	8.
3.3	6.2.5	9.

Exterior Walls		
0.Uncoded	4.Asbestos	8.Stone
1.Wood	5.Stucco	9.Other
2.Vin/Al	6.Brick Ve	10.Concret
3.Compos.	7.Solid Br	12.

Roof Surface		
1.Asphalt	4.Composit	7.
2.Slate	5.Wood	8.
3.Metal	6.Other	9.

SF Masonry Trim
OPEN-3-CUSTOM
OPEN-4-CUSTOM
Year Built
Year Remodeled

Foundation		
1.Concrete	4.Wood	7.
2.C Block	5.Slab	8.
3.Br/Stone	6.Piers	9.

Basement		
1.1/4 Bmt	4.Full Bmt	7.
2.1/2 Bmt	5.None	8.
3.3/4 Bmt	6.	9.None

Bsmt Gar # Cars

Wet Basement		
1.Dry	4.	7.
2.Damp	5.	8.
3.Wet	6.	9.

SF Bsmt Living
Fin Bsmt Grade
OPEN-5-CUSTOMIZE

Heat Type **100%**		
0.Uncoded	4.Steam	8.Fl/Wall
1.HWBB	5.FWA	9.No Heat
2.HWCI	6.GravWA	10.Radiabt
3.H Pump	7.Electric	12.

Cool Type **0%**		
1.Refrig	4.W&C Air	7.
2.Evapor	5.	8.
3.H Pump	6.	9.None

Kitchen Style		
1.Modern	4.Obsolete	7.
2.Typical	5.	8.
3.Old Type	6.	9.None

Bath(s) Style		
1.Modern	4.Obsolete	7.
2.Typical	5.	8.
3.Old Type	6.	9.None

Rooms
Bedrooms
Full Baths
Half Baths
Addn Fixtures
Fireplaces

TRIO Software
A Division of Harris Computer Systems

Layout		
1.Typical	4.	7.
2.Inadeq	5.	8.
3.Horrid	6.	9.

Attic		
1.1/4 Fin	4.Full Fin	7.
2.1/2 Fin	5.Fl/Stair	8.
3.3/4 Fin	6.	9.None

Insulation		
1.Full	4.Minimal	7.
2.Heavy	5.Partial	8.
3.Capped	6.	9.None

Unfinished %

Grade & Factor		
1.E Grade	4.B Grade	7.AAA Grad
2.D Grade	5.A Grade	8.SC Grade
3.C Grade	6.AA Grade	9.Same

SQFT (Footprint)

Condition		
1.Poor	4.Avg	7.V G
2.Fair	5.Avg+	8.Exc
3.Avg-	6.Good	9.Same

Phys. % Good
Funct. % Good

Functional Code		
1.Incomp	4.Delap	7.Seasonal
2.O-Built	5.Bsmt	8.
3.Fire	6.2014 ADJ	9.None

Econ. % Good

Economic Code		
0.None	3.No Power	7.
1.Location	4.Generate	8.
2.Encroach	9.None	9.

Entrance Code **0**		
1.Interior	4.Vacant	7.
2.Refusal	5.Estimate	8.
3.Informed	6.	9.

Information Code **0**		
1.Owner	4.Agent	7.
2.Relative	5.Estimate	8.
3.Tenant	6.Other	9.

Date Inspected

Additions, Outbuildings & Improvements

Type	Year	Units	Grade	Cond	Phys.	Funct.	Sound Value
					%	%	
					%	%	
					%	%	
					%	%	
					%	%	
					%	%	
					%	%	
					%	%	
					%	%	
					%	%	

1.One Story Fram
2.Two Story Fram
3.Three Story Fr
4.1 & 1/2 Story
5.1 & 3/4 Story
6.2 & 1/2 Story
21.Open Frame Por
22.Encl Frame Por
23.Frame Garage
24.Frame Shed
25.Frame Bay Wind
26.1SFr Overhang
27.Unfin Basement
28.Unfinished Att
29.Finished Attic

Map Lot 223-009-012 Account 2257 Location WHETEM LANE Card 1 Of 1 11/30/2020

WHITMORE, JR, HARRY E
49 WHETEM LANE
HANCOCK ME 04640

Property Data

Neighborhood **56 Neighborhood 56**

Tree Growth Year **0**

TREE GROWTH RECERTIFY

STATE SALE CODE

Zone/Land Use **11 Residential**

Secondary Zone

Topography

1.Level	4.Below St	7.
2.Rolling	5.Low	8.
3.Above St	6.Swampy	9.

Utilities

1.Public	4.Dr Well	7.Cesspool
2.Water	5.Dug Well	8.
3.Sewer	6.Septic	9.None

Street

1.Paved	4.Proposed	7.
2.Semi Imp	5.	8.
3.Gravel	6.	9.None

REVIEW STRUCTURE YEAR **0**

RENTAL? 0=NO 1=YES **0**

Sale Data

Sale Date

Price

Sale Type

1.Land	4.Mobile	7.
2.L & B	5.Other	8.
3.Building	6.	9.

Financing

1.Convent	4.Seller	7.
2.FHA/VA	5.Private	8.
3.Assumed	6.Cash	9.Unknown

Validity

1.Valid	4.Split	7.Changes
2.Related	5.Partial	8.Other
3.Distress	6.Exempt	9.Fr Ffclse

Verified

1.Buyer	4.Agent	7.Family
2.Seller	5.Pub Rec	8.Other
3.Lender	6.MLS	9.

Assessment Record

Year	Land	Buildings	Exempt	Total
2020	25,500	0	0	25,500

Land Data

Front Foot	Type	Effective Frontage	Effective Depth	Influence Factor	Influence Code
11.Regular Lot				%	
12.Delta Triangle				%	
13.Nabla Triangle				%	
14.Rear Land				%	
15.Miscellaneous				%	
				%	
				%	

Square Foot		Square Feet		
16.Regular Lot			%	
17.Secondary Lot			%	
18.Excess Land			%	
19.Condominium			%	
20.Miscellaneous			%	
			%	
			%	

Fract. Acre		Acreage/Sites		
21.Homesite (Frac	21	1.00	100 %	0
22.Baselot (Fract	24	0.72	100 %	0
23.Misc (Fract)			%	
Acres			%	
24.Excess Acres 1			%	
25.Excess Acres 5			%	
26.Excess Acres 2			%	
27.Excess Acres 5			%	
28.Excess Acres 1			%	
29.Excess acres			%	

Total Acreage 1.72

Influence Codes

1.Unimproved
2.Excess Frtg
3.Topography
4.Size/Shape
5.Access
6.Restriction
7.Corner Infl
8.Environment
9.Fract Share
Acres
30.Industrial Sit
31.Working Waterf
32.Cultivated Cro
33.Pasture
34.Softwood (Farm
35.Mixed Wood (Fa
36.Hardwood (Farm
37.Softwood
38.Mixed Wood
39.Hardwood
40.Wasteland
41.Gravel Pit
42.Mobile Home Si
43.Location Base
44.Lot Improvemen
45.Waterfront A
46.Lobster Pound

Inspection Witnessed By:

X Date

No./Date	Description	Date Insp.

Notes:

Hancock

Hancock

Map Lot 223-009-012 | Account 2257 | Location WHETEM LANE | Card 1 Of 1 | 11/30/2020

Building Style		
0.Uncoded	4.Cape	8.Log
1.Conv.	5.Garrison	9.Other
2.Ranch	6.Colonial	10.Dutch C
3.R Ranch	7.Contemp	11.Farmhou

Dwelling Units

Other Units

Stories		
1.1	4.1.5	7.3.5
2.2	5.1.75	8.
3.3	6.2.5	9.

Exterior Walls		
0.Uncoded	4.Asbestos	8.Stone
1.Wood	5.Stucco	9.Other
2.Vin/Al	6.Brick Ve	10.Concret
3.Compos.	7.Solid Br	12.

Roof Surface		
1.Asphalt	4.Composit	7.
2.Slate	5.Wood	8.
3.Metal	6.Other	9.

SF Masonry Trim

OPEN-3-CUSTOM

OPEN-4-CUSTOM

Year Built

Year Remodeled

Foundation		
1.Concrete	4.Wood	7.
2.C Block	5.Slab	8.
3.Br/Stone	6.Piers	9.

Basement		
1.1/4 Bmt	4.Full Bmt	7.
2.1/2 Bmt	5.None	8.
3.3/4 Bmt	6.	9.None

Bsmt Gar # Cars

Wet Basement		
1.Dry	4.	7.
2.Damp	5.	8.
3.Wet	6.	9.

SF Bsmt Living

Fin Bsmt Grade

OPEN-5-CUSTOMIZE

Heat Type **100%**		
0.Uncoded	4.Steam	8.Fl/Wall
1.HWBB	5.FWA	9.No Heat
2.HWCI	6.GravWA	10.Radiabt
3.H Pump	7.Electric	12.

Cool Type **0%**		
1.Refrig	4.W&C Air	7.
2.Evapor	5.	8.
3.H Pump	6.	9.None

Kitchen Style		
1.Modern	4.Obsolete	7.
2.Typical	5.	8.
3.Old Type	6.	9.None

Bath(s) Style		
1.Modern	4.Obsolete	7.
2.Typical	5.	8.
3.Old Type	6.	9.None

Rooms

Bedrooms

Full Baths

Half Baths

Addn Fixtures

Fireplaces

TRIO Software
A Division of Harris Computer Systems

Layout		
1.Typical	4.	7.
2.Inadeq	5.	8.
3.Horrid	6.	9.

Attic		
1.1/4 Fin	4.Full Fin	7.
2.1/2 Fin	5.Fl/Stair	8.
3.3/4 Fin	6.	9.None

Insulation		
1.Full	4.Minimal	7.
2.Heavy	5.Partial	8.
3.Capped	6.	9.None

Unfinished %

Grade & Factor		
1.E Grade	4.B Grade	7.AAA Grad
2.D Grade	5.A Grade	8.SC Grade
3.C Grade	6.AA Grade	9.Same

SQFT (Footprint)

Condition		
1.Poor	4.Avg	7.V G
2.Fair	5.Avg+	8.Exc
3.Avg-	6.Good	9.Same

Phys. % Good

Funct. % Good

Functional Code		
1.Incomp	4.Delap	7.Seasonal
2.O-Built	5.Bsmt	8.
3.Fire	6.2014 ADJ	9.None

Econ. % Good

Economic Code		
0.None	3.No Power	7.
1.Location	4.Generate	8.
2.Encroach	9.None	9.

Entrance Code **0**		
1.Interior	4.Vacant	7.
2.Refusal	5.Estimate	8.
3.Informed	6.	9.

Information Code **0**		
1.Owner	4.Agent	7.
2.Relative	5.Estimate	8.
3.Tenant	6.Other	9.

Date Inspected

Additions, Outbuildings & Improvements

Type	Year	Units	Grade	Cond	Phys.	Funct.	Sound Value
					%	%	
					%	%	
					%	%	
					%	%	
					%	%	
					%	%	
					%	%	
					%	%	
					%	%	
					%	%	

1.One Story Fram
2.Two Story Fram
3.Three Story Fr
4.1 & 1/2 Story
5.1 & 3/4 Story
6.2 & 1/2 Story
21.Open Frame Por
22.Encl Frame Por
23.Frame Garage
24.Frame Shed
25.Frame Bay Wind
26.1SFr Overhang
27.Unfin Basement
28.Unfinished Att
29.Finished Attic

Map Lot 223-010 Account 1928 Location 56 WHETEM LANE Card 1 Of 1 11/30/2020

LANDMARK RENTALS LLC
184 THORSEN RD
HANCOCK ME 04640

B4955P200

Inspection Witnessed By:

X Date

No./Date	Description	Date Insp.

Notes:

Hancock

Property Data

Neighborhood **56 Neighborhood 56**

Tree Growth Year **0**

TREE GROWTH RECERTIFY **0**

STATE SALE CODE **0**

Zone/Land Use **11 Residential**

Secondary Zone

Topography

1.Level	4.Below St	7.
2.Rolling	5.Low	8.
3.Above St	6.Swampy	9.

Utilities

1.Public	4.Dr Well	7.Cesspool
2.Water	5.Dug Well	8.
3.Sewer	6.Septic	9.None

Street

1.Paved	4.Proposed	7.
2.Semi Imp	5.	8.
3.Gravel	6.	9.None

REVIEW STRUCTURE YEAR **0**

RENTAL? 0=NO 1=YES **0**

Sale Data

Sale Date

Price

Sale Type

1.Land	4.Mobile	7.
2.L & B	5.Other	8.
3.Building	6.	9.

Financing

1.Convent	4.Seller	7.
2.FHA/VA	5.Private	8.
3.Assumed	6.Cash	9.Unknown

Validity

1.Valid	4.Split	7.Changes
2.Related	5.Partial	8.Other
3.Distress	6.Exempt	9.Fr Ffclse

Verified

1.Buyer	4.Agent	7.Family
2.Seller	5.Pub Rec	8.Other
3.Lender	6.MLS	9.

Assessment Record

Year	Land	Buildings	Exempt	Total
2007	37,500	67,400	0	104,900
2008	59,800	69,100	0	128,900
2009	59,800	69,100	0	128,900
2010	59,800	72,700	0	132,500
2011	59,800	72,700	0	132,500
2012	59,800	72,700	0	132,500
2013	59,800	72,700	0	132,500
2014	59,800	65,900	0	125,700
2015	59,800	65,900	0	125,700
2016	59,800	65,900	0	125,700
2017	59,800	65,200	0	125,000
2018	59,800	65,200	0	125,000
2019	59,800	65,200	0	125,000
2020	59,800	65,200	0	125,000

Land Data

Front Foot	Type	Effective Frontage	Effective Depth	Influence Factor	Influence Code
11.Regular Lot				%	
12.Delta Triangle				%	
13.Nabla Triangle				%	
14.Rear Land				%	
15.Miscellaneous				%	
				%	
				%	
Square Foot		**Square Feet**			
16.Regular Lot				%	
17.Secondary Lot				%	
18.Excess Land				%	
19.Condominium				%	
20.Miscellaneous				%	
				%	
				%	
Fract. Acre		**Acreage/Sites**			
21.Homesite (Frac	21	1.00	100	%	0
22.Baselot (Fract	44	2.00	100	%	0
23.Misc (Fract)	24	4.00	100	%	0
Acres	25	5.00	100	%	0
24.Excess Acres 1				%	
25.Excess Acres 5				%	
26.Excess Acres 2				%	
27.Excess Acres 5					
28.Excess Acres 1					
29.Excess acres					

Total Acreage 10.00

Influence Codes

1.Unimproved
2.Excess Frtg
3.Topography
4.Size/Shape
5.Access
6.Restriction
7.Corner Infl
8.Environment
9.Fract Share
Acres
30.Industrial Sit
31.Working Waterf
32.Cultivated Cro
33.Pasture
34.Softwood (Farm
35.Mixed Wood (Fa
36.Hardwood (Farm
37.Softwood
38.Mixed Wood
39.Hardwood
40.Wasteland
41.Gravel Pit
42.Mobile Home Si
43.Location Base
44.Lot Improvemen
45.Waterfront A
46.Lobster Pound

Hancock

Map Lot 223-010 | Account 1928 | Location 56 WHETEM LANE | Card 1 Of 1 | 11/30/2020

Building Style **1 Conventional**		
0.Uncoded	4.Cape	8.Log
1.Conv.	5.Garrison	9.Other
2.Ranch	6.Colonial	10.Dutch C
3.R Ranch	7.Contemp	11.Farmhou
Dwelling Units **2**		
Other Units **0**		
Stories **2 Two Story**		
1.1	4.1.5	7.3.5
2.2	5.1.75	8.
3.3	6.2.5	9.
Exterior Walls **2 Vinyl/Aluminum**		
0.Uncoded	4.Asbestos	8.Stone
1.Wood	5.Stucco	9.Other
2.Vin/Al	6.Brick Ve	10.Concret
3.Compos.	7.Solid Br	12.
Roof Surface **1 Asphalt Shingles**		
1.Asphalt	4.Composit	7.
2.Slate	5.Wood	8.
3.Metal	6.Other	9.
SF Masonry Trim **0**		
OPEN-3-CUSTOM **0**		
OPEN-4-CUSTOM **0**		
Year Built **1980**		
Year Remodeled **0**		
Foundation **4 Wood**		
1.Concrete	4.Wood	7.
2.C Block	5.Slab	8.
3.Br/Stone	6.Piers	9.
Basement **1 1/4 Basement**		
1.1/4 Bmt	4.Full Bmt	7.
2.1/2 Bmt	5.None	8.
3.3/4 Bmt	6.	9.None
Bsmt Gar # Cars **0**		
Wet Basement **1 Dry Basement**		
1.Dry	4.	7.
2.Damp	5.	8.
3.Wet	6.	9.

SF Bsmt Living **0**		
Fin Bsmt Grade **0 0**		
OPEN-5-CUSTOMIZE **0**		
Heat Type **100% 5 Forced Warm Air**		
0.Uncoded	4.Steam	8.Fl/Wall
1.HWBB	5.FWA	9.No Heat
2.HWCI	6.GravWA	10.Radiabt
3.H Pump	7.Electric	12.
Cool Type **100% 9 None**		
1.Refrig	4.W&C Air	7.
2.Evapor	5.	8.
3.H Pump	6.	9.None
Kitchen Style **2 Typical**		
1.Modern	4.Obsolete	7.
2.Typical	5.	8.
3.Old Type	6.	9.None
Bath(s) Style **2 Typical Bath(s)**		
1.Modern	4.Obsolete	7.
2.Typical	5.	8.
3.Old Type	6.	9.None
# Rooms **4**		
# Bedrooms **2**		
# Full Baths **2**		
# Half Baths **0**		
# Addn Fixtures **0**		
# Fireplaces **0**		

TRIO Software
A Division of Harris Computer Systems

Layout **1 Typical**		
1.Typical	4.	7.
2.Inadeq	5.	8.
3.Horrid	6.	9.
Attic **9 None**		
1.1/4 Fin	4.Full Fin	7.
2.1/2 Fin	5.Fl/Stair	8.
3.3/4 Fin	6.	9.None
Insulation **1 Full**		
1.Full	4.Minimal	7.
2.Heavy	5.Partial	8.
3.Capped	6.	9.None
Unfinished % **0%**		
Grade & Factor **2 Fair 80%**		
1.E Grade	4.B Grade	7.AAA Grad
2.D Grade	5.A Grade	8.SC Grade
3.C Grade	6.AA Grade	9.Same
SQFT (Footprint) **540**		
Condition **4 Average**		
1.Poor	4.Avg	7.V G
2.Fair	5.Avg+	8.Exc
3.Avg-	6.Good	9.Same
Phys. % Good **0%**		
Funct. % Good **90%**		
Functional Code **6 2014 ADJUSTMENT**		
1.Incomp	4.Delap	7.Seasonal
2.O-Built	5.Bsmt	8.
3.Fire	6.2014 ADJ	9.None
Econ. % Good **100%**		
Economic Code **None**		
0.None	3.No Power	7.
1.Location	4.Generate	8.
2.Encroach	9.None	9.
Entrance Code **0**		
1.Interior	4.Vacant	7.
2.Refusal	5.Estimate	8.
3.Informed	6.	9.
Information Code **0**		
1.Owner	4.Agent	7.
2.Relative	5.Estimate	8.
3.Tenant	6.Other	9.

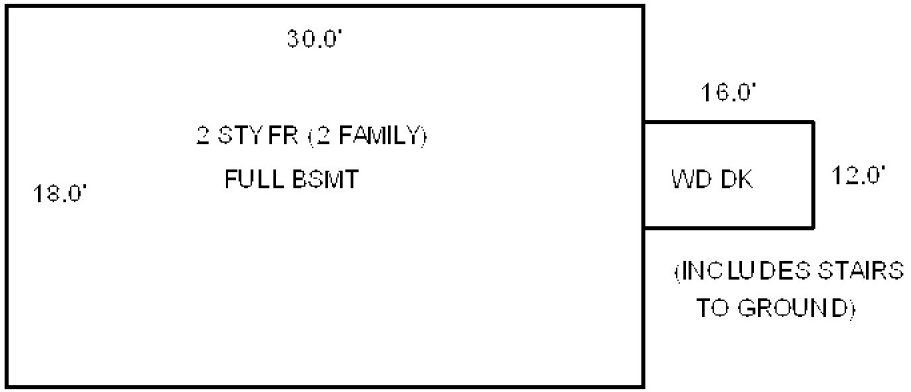

Date Inspected

Additions, Outbuildings & Improvements

Type	Year	Units	Grade	Cond	Phys.	Funct.	Sound Value
24 Frame Shed	1995	192	3 100	4	0 %	100 %	
68 Wood Deck	2010	192	4 100	4	0 %	100 %	
					%	%	
					%	%	
					%	%	
					%	%	
					%	%	
					%	%	
					%	%	
					%	%	

1.One Story Fram
2.Two Story Fram
3.Three Story Fr
4.1 & 1/2 Story
5.1 & 3/4 Story
6.2 & 1/2 Story
21.Open Frame Por
22.Encl Frame Por
23.Frame Garage
24.Frame Shed
25.Frame Bay Wind
26.1SFr Overhang
27.Unfin Basement
28.Unfinished Att
29.Finished Attic

Map Lot 223-011 Account 1828 Location WASHINGTON JCT ROAD Card 1 Of 1 11/30/2020

A & J RENTALS, LLC
30 CHARLES LANE
GOULDSBORO ME 04607

B6833P170 B6833P124 B6954P252

Previous Owner
ANDREWS, WILLIAM O
186 EASTSIDE ROAD

SORENTO ME 04664
Sale Date: 9/26/2017

Previous Owner
STATE OF MAINE

Sale Date: 9/22/2017

Inspection Witnessed By:

X Date

No./Date	Description	Date Insp.

Notes:

Hancock

Property Data

Neighborhood	**56 Neighborhood 56**
Tree Growth Year	**0**
TREE GROWTH RECERTIFY	**0**
STATE SALE CODE	**0**
Zone/Land Use	**11 Residential**
Secondary Zone	

Topography

1.Level	4.Below St	7.
2.Rolling	5.Low	8.
3.Above St	6.Swampy	9.

Utilities

1.Public	4.Dr Well	7.Cesspool
2.Water	5.Dug Well	8.
3.Sewer	6.Septic	9.None

Street

1.Paved	4.Proposed	7.
2.Semi Imp	5.	8.
3.Gravel	6.	9.None

REVIEW STRUCTURE YEAR	**0**
RENTAL? 0=NO 1=YES	**0**

Sale Data

Sale Date	**9/26/2017**
Price	**79,900**
Sale Type	**1 Land Only**

1.Land	4.Mobile	7.
2.L & B	5.Other	8.
3.Building	6.	9.

Financing	**9 Unknown**

1.Convent	4.Seller	7.
2.FHA/VA	5.Private	8.
3.Assumed	6.Cash	9.Unknown

Validity	**2 Related Parties**

1.Valid	4.Split	7.Changes
2.Related	5.Partial	8.Other
3.Distress	6.Exempt	9.Fr Ffclse

Verified	**5 Public Record**

1.Buyer	4.Agent	7.Family
2.Seller	5.Pub Rec	8.Other
3.Lender	6.MLS	9.

Assessment Record

Year	Land	Buildings	Exempt	Total
2007	77,000	0	0	77,000
2008	77,600	0	77,600	0
2009	77,600	0	77,600	0
2010	77,600	0	77,600	0
2011	77,600	0	77,600	0
2012	77,600	0	77,600	0
2013	77,600	0	77,600	0
2014	77,600	0	77,600	0
2015	77,600	0	77,600	0
2016	77,600	0	77,600	0
2017	77,600	0	77,600	0
2018	77,600	0	0	77,600
2019	77,600	0	0	77,600
2020	37,100	0	0	37,100

Land Data

Front Foot	Type	Effective Frontage	Effective Depth	Influence Factor	Influence Code
11.Regular Lot				%	
12.Delta Triangle				%	
13.Nabla Triangle				%	
14.Rear Land				%	
15.Miscellaneous				%	
				%	
				%	
Square Foot		**Square Feet**			
16.Regular Lot				%	
17.Secondary Lot				%	
18.Excess Land				%	
19.Condominium				%	
20.Miscellaneous				%	
				%	
				%	
Fract. Acre		**Acreage/Sites**			
21.Homesite (Frac	21	1.00	100	%	0
22.Baselot (Fract	24	4.00	100	%	0
23.Misc (Fract)	25	6.74	100	%	0
Acres				%	
24.Excess Acres 1				%	
25.Excess Acres 5				%	
26.Excess Acres 2				%	
27.Excess Acres 5				%	
28.Excess Acres 1					
29.Excess acres					

Total Acreage 11.74

Influence Codes

1.Unimproved
2.Excess Frtg
3.Topography
4.Size/Shape
5.Access
6.Restriction
7.Corner Infl
8.Environment
9.Fract Share
Acres
30.Industrial Sit
31.Working Waterf
32.Cultivated Cro
33.Pasture
34.Softwood (Farm
35.Mixed Wood (Fa
36.Hardwood (Farm
37.Softwood
38.Mixed Wood
39.Hardwood
40.Wasteland
41.Gravel Pit
42.Mobile Home Si
43.Location Base
44.Lot Improvemen
45.Waterfront A
46.Lobster Pound

Hancock

Map Lot 223-011 | Account 1828 | Location WASHINGTON JCT ROAD | Card 1 Of 1 | 11/30/2020

Building Style		
0.Uncoded	4.Cape	8.Log
1.Conv.	5.Garrison	9.Other
2.Ranch	6.Colonial	10.Dutch C
3.R Ranch	7.Contemp	11.Farmhou

Dwelling Units

Other Units

Stories		
1.1	4.1.5	7.3.5
2.2	5.1.75	8.
3.3	6.2.5	9.

Exterior Walls		
0.Uncoded	4.Asbestos	8.Stone
1.Wood	5.Stucco	9.Other
2.Vin/Al	6.Brick Ve	10.Concret
3.Compos.	7.Solid Br	12.

Roof Surface		
1.Asphalt	4.Composit	7.
2.Slate	5.Wood	8.
3.Metal	6.Other	9.

SF Masonry Trim

OPEN-3-CUSTOM

OPEN-4-CUSTOM

Year Built

Year Remodeled

Foundation		
1.Concrete	4.Wood	7.
2.C Block	5.Slab	8.
3.Br/Stone	6.Piers	9.

Basement		
1.1/4 Bmt	4.Full Bmt	7.
2.1/2 Bmt	5.None	8.
3.3/4 Bmt	6.	9.None

Bsmt Gar # Cars

Wet Basement		
1.Dry	4.	7.
2.Damp	5.	8.
3.Wet	6.	9.

SF Bsmt Living

Fin Bsmt Grade

OPEN-5-CUSTOMIZE

Heat Type **100%**		
0.Uncoded	4.Steam	8.Fl/Wall
1.HWBB	5.FWA	9.No Heat
2.HWCI	6.GravWA	10.Radiabt
3.H Pump	7.Electric	12.

Cool Type **100%**		
1.Refrig	4.W&C Air	7.
2.Evapor	5.	8.
3.H Pump	6.	9.None

Kitchen Style		
1.Modern	4.Obsolete	7.
2.Typical	5.	8.
3.Old Type	6.	9.None

Bath(s) Style		
1.Modern	4.Obsolete	7.
2.Typical	5.	8.
3.Old Type	6.	9.None

Rooms

Bedrooms

Full Baths

Half Baths

Addn Fixtures

Fireplaces

TRIO Software
A Division of Harris Computer Systems

Layout		
1.Typical	4.	7.
2.Inadeq	5.	8.
3.Horrid	6.	9.

Attic		
1.1/4 Fin	4.Full Fin	7.
2.1/2 Fin	5.Fl/Stair	8.
3.3/4 Fin	6.	9.None

Insulation		
1.Full	4.Minimal	7.
2.Heavy	5.Partial	8.
3.Capped	6.	9.None

Unfinished %

Grade & Factor		
1.E Grade	4.B Grade	7.AAA Grad
2.D Grade	5.A Grade	8.SC Grade
3.C Grade	6.AA Grade	9.Same

SQFT (Footprint)

Condition		
1.Poor	4.Avg	7.V G
2.Fair	5.Avg+	8.Exc
3.Avg-	6.Good	9.Same

Phys. % Good

Funct. % Good

Functional Code		
1.Incomp	4.Delap	7.Seasonal
2.O-Built	5.Bsmt	8.
3.Fire	6.2014 ADJ	9.None

Econ. % Good

Economic Code		
0.None	3.No Power	7.
1.Location	4.Generate	8.
2.Encroach	9.None	9.

Entrance Code **0**		
1.Interior	4.Vacant	7.
2.Refusal	5.Estimate	8.
3.Informed	6.	9.

Information Code **0**		
1.Owner	4.Agent	7.
2.Relative	5.Estimate	8.
3.Tenant	6.Other	9.

Date Inspected

Additions, Outbuildings & Improvements

Type	Year	Units	Grade	Cond	Phys.	Funct.	Sound Value
					%	%	
					%	%	
					%	%	
					%	%	
					%	%	
					%	%	
					%	%	
					%	%	
					%	%	
					%	%	

1.One Story Fram
2.Two Story Fram
3.Three Story Fr
4.1 & 1/2 Story
5.1 & 3/4 Story
6.2 & 1/2 Story
21.Open Frame Por
22.Encl Frame Por
23.Frame Garage
24.Frame Shed
25.Frame Bay Wind
26.1SFr Overhang
27.Unfin Basement
28.Unfinished Att
29.Finished Attic

Map Lot 223-011-001 Account 2267 Location WASHINGTON JCT RD Card 1 Of 1 11/30/2020

SUNRISE1, LLC
30 CHARLES LANE
GOULDSBORO ME 04607

B6954P252

Property Data

Neighborhood **56 Neighborhood 56**

Tree Growth Year **0**

TREE GROWTH RECERTIFY

STATE SALE CODE

Zone/Land Use **11 Residential**

Secondary Zone

Topography

1.Level	4.Below St	7.
2.Rolling	5.Low	8.
3.Above St	6.Swampy	9.

Utilities

1.Public	4.Dr Well	7.Cesspool
2.Water	5.Dug Well	8.
3.Sewer	6.Septic	9.None

Street

1.Paved	4.Proposed	7.
2.Semi Imp	5.	8.
3.Gravel	6.	9.None

REVIEW STRUCTURE YEAR **0**

RENTAL? 0=NO 1=YES **0**

Sale Data

Sale Date

Price

Sale Type

1.Land	4.Mobile	7.
2.L & B	5.Other	8.
3.Building	6.	9.

Financing

1.Convent	4.Seller	7.
2.FHA/VA	5.Private	8.
3.Assumed	6.Cash	9.Unknown

Validity

1.Valid	4.Split	7.Changes
2.Related	5.Partial	8.Other
3.Distress	6.Exempt	9.Fr Ffclse

Verified

1.Buyer	4.Agent	7.Family
2.Seller	5.Pub Rec	8.Other
3.Lender	6.MLS	9.

Assessment Record

Year	Land	Buildings	Exempt	Total
2020	62,800	0	0	62,800

Land Data

Front Foot	Type	Effective Frontage	Effective Depth	Influence Factor	Influence Code
11.Regular Lot				%	
12.Delta Triangle				%	
13.Nabla Triangle				%	
14.Rear Land				%	
15.Miscellaneous				%	
				%	
				%	

Square Foot		Square Feet		
16.Regular Lot			%	
17.Secondary Lot			%	
18.Excess Land			%	
19.Condominium			%	
20.Miscellaneous			%	
			%	
			%	

Fract. Acre	Acreage/Sites			
21.Homesite (Frac	21	1.00	100 %	0
22.Baselot (Fract	24	4.00	100 %	0
23.Misc (Fract)	25	20.00	100 %	0
Acres	26	6.26	100 %	0
24.Excess Acres 1			%	
25.Excess Acres 5			%	
26.Excess Acres 2			%	
27.Excess Acres 5				
28.Excess Acres 1				
29.Excess acres				

Total Acreage 31.26

Influence Codes

1.Unimproved
2.Excess Frtg
3.Topography
4.Size/Shape
5.Access
6.Restriction
7.Corner Infl
8.Environment
9.Fract Share
Acres
30.Industrial Sit
31.Working Waterf
32.Cultivated Cro
33.Pasture
34.Softwood (Farm
35.Mixed Wood (Fa
36.Hardwood (Farm
37.Softwood
38.Mixed Wood
39.Hardwood
40.Wasteland
41.Gravel Pit
42.Mobile Home Si
43.Location Base
44.Lot Improvemen
45.Waterfront A
46.Lobster Pound

Inspection Witnessed By:

X Date

No./Date	Description	Date Insp.

Notes:

Hancock

Hancock

Map Lot 223-011-001 | Account 2267 | Location WASHINGTON JCT RD | Card 1 Of 1 | 11/30/2020

Building Style		
0.Uncoded	4.Cape	8.Log
1.Conv.	5.Garrison	9.Other
2.Ranch	6.Colonial	10.Dutch C
3.R Ranch	7.Contemp	11.Farmhou

Dwelling Units
Other Units

Stories		
1.1	4.1.5	7.3.5
2.2	5.1.75	8.
3.3	6.2.5	9.

Exterior Walls		
0.Uncoded	4.Asbestos	8.Stone
1.Wood	5.Stucco	9.Other
2.Vin/Al	6.Brick Ve	10.Concret
3.Compos.	7.Solid Br	12.

Roof Surface		
1.Asphalt	4.Composit	7.
2.Slate	5.Wood	8.
3.Metal	6.Other	9.

SF Masonry Trim
OPEN-3-CUSTOM
OPEN-4-CUSTOM
Year Built
Year Remodeled

Foundation		
1.Concrete	4.Wood	7.
2.C Block	5.Slab	8.
3.Br/Stone	6.Piers	9.

Basement		
1.1/4 Bmt	4.Full Bmt	7.
2.1/2 Bmt	5.None	8.
3.3/4 Bmt	6.	9.None

Bsmt Gar # Cars

Wet Basement		
1.Dry	4.	7.
2.Damp	5.	8.
3.Wet	6.	9.

SF Bsmt Living
Fin Bsmt Grade
OPEN-5-CUSTOMIZE

Heat Type **100%**		
0.Uncoded	4.Steam	8.Fl/Wall
1.HWBB	5.FWA	9.No Heat
2.HWCI	6.GravWA	10.Radiabt
3.H Pump	7.Electric	12.

Cool Type **100%**		
1.Refrig	4.W&C Air	7.
2.Evapor	5.	8.
3.H Pump	6.	9.None

Kitchen Style		
1.Modern	4.Obsolete	7.
2.Typical	5.	8.
3.Old Type	6.	9.None

Bath(s) Style		
1.Modern	4.Obsolete	7.
2.Typical	5.	8.
3.Old Type	6.	9.None

Rooms
Bedrooms
Full Baths
Half Baths
Addn Fixtures
Fireplaces

TRIO Software
A Division of Harris Computer Systems

Layout		
1.Typical	4.	7.
2.Inadeq	5.	8.
3.Horrid	6.	9.

Attic		
1.1/4 Fin	4.Full Fin	7.
2.1/2 Fin	5.Fl/Stair	8.
3.3/4 Fin	6.	9.None

Insulation		
1.Full	4.Minimal	7.
2.Heavy	5.Partial	8.
3.Capped	6.	9.None

Unfinished %

Grade & Factor		
1.E Grade	4.B Grade	7.AAA Grad
2.D Grade	5.A Grade	8.SC Grade
3.C Grade	6.AA Grade	9.Same

SQFT (Footprint)

Condition		
1.Poor	4.Avg	7.V G
2.Fair	5.Avg+	8.Exc
3.Avg-	6.Good	9.Same

Phys. % Good
Funct. % Good

Functional Code		
1.Incomp	4.Delap	7.Seasonal
2.O-Built	5.Bsmt	8.
3.Fire	6.2014 ADJ	9.None

Econ. % Good

Economic Code		
0.None	3.No Power	7.
1.Location	4.Generate	8.
2.Encroach	9.None	9.

Entrance Code **0**		
1.Interior	4.Vacant	7.
2.Refusal	5.Estimate	8.
3.Informed	6.	9.

Information Code **0**		
1.Owner	4.Agent	7.
2.Relative	5.Estimate	8.
3.Tenant	6.Other	9.

Date Inspected

Additions, Outbuildings & Improvements

Type	Year	Units	Grade	Cond	Phys.	Funct.	Sound Value
					%	%	
					%	%	
					%	%	
					%	%	
					%	%	
					%	%	
					%	%	
					%	%	
					%	%	
					%	%	

1.One Story Fram
2.Two Story Fram
3.Three Story Fr
4.1 & 1/2 Story
5.1 & 3/4 Story
6.2 & 1/2 Story
21.Open Frame Por
22.Encl Frame Por
23.Frame Garage
24.Frame Shed
25.Frame Bay Wind
26.1SFr Overhang
27.Unfin Basement
28.Unfinished Att
29.Finished Attic

Map Lot 223-012 Account 1904 Location 8 POPLAR LANE Card 1 Of 1 11/30/2020

KING, ERNEST
KING, DAWN
8 POPLAR LANE
HANCOCK ME 04640

B4569P280 B5104P213

Previous Owner
ARTUS, CHARLES & NORMA J/T (TIC)
KING, ERNEST & DAWN J/T (TIC)
8 POPLAR LANE
HANCOCK ME 04640
Sale Date: 6/23/2006

Previous Owner
SINCLAIR, LAWRENCE R.
P O BOX 385

ELLSWORTH ME 04605
Sale Date: 6/23/2006

Previous Owner
CLOUGH, HELEN ET ALS
8 STRAWBERRY HILL

BAR HARBOR ME 04609
Sale Date: 6/21/2004

Inspection Witnessed By:

X Date

No./Date	Description	Date Insp.

Notes:

Hancock

Property Data

Neighborhood **66 Neighborhood 66**

Tree Growth Year **0**

TREE GROWTH RECERTIFY **0**

STATE SALE CODE **0**

Zone/Land Use **11 Residential**

Secondary Zone

Topography

1.Level	4.Below St	7.
2.Rolling	5.Low	8.
3.Above St	6.Swampy	9.

Utilities

1.Public	4.Dr Well	7.Cesspool
2.Water	5.Dug Well	8.
3.Sewer	6.Septic	9.None

Street **1 Paved**

1.Paved	4.Proposed	7.
2.Semi Imp	5.	8.
3.Gravel	6.	9.None

REVIEW STRUCTURE YEAR **0**

RENTAL? 0=NO 1=YES **0**

Sale Data

Sale Date **6/23/2006**

Price **249,000**

Sale Type **2 Land & Buildings**

1.Land	4.Mobile	7.
2.L & B	5.Other	8.
3.Building	6.	9.

Financing **9 Unknown**

1.Convent	4.Seller	7.
2.FHA/VA	5.Private	8.
3.Assumed	6.Cash	9.Unknown

Validity **1 Arms Length Sale**

1.Valid	4.Split	7.Changes
2.Related	5.Partial	8.Other
3.Distress	6.Exempt	9.Fr Ffclse

Verified **5 Public Record**

1.Buyer	4.Agent	7.Family
2.Seller	5.Pub Rec	8.Other
3.Lender	6.MLS	9.

Assessment Record

Year	Land	Buildings	Exempt	Total
2007	65,700	210,300	13,000	263,000
2008	65,700	210,300	13,000	263,000
2009	65,700	210,300	13,000	263,000
2010	65,700	210,300	10,000	266,000
2011	65,700	210,300	10,000	266,000
2012	65,700	210,300	10,000	266,000
2013	65,700	210,300	10,000	266,000
2014	65,700	210,300	10,800	265,200
2015	65,700	210,300	11,000	265,000
2016	65,700	210,300	23,100	252,900
2017	65,700	210,300	28,600	247,400
2018	65,700	210,300	28,600	247,400
2019	65,700	210,300	28,600	247,400
2020	65,700	210,300	31,000	245,000

Land Data

Front Foot	Type	Effective Frontage	Effective Depth	Influence Factor	Influence Code
11.Regular Lot				%	
12.Delta Triangle				%	
13.Nabla Triangle				%	
14.Rear Land				%	
15.Miscellaneous				%	
				%	
				%	
Square Foot		**Square Feet**			
16.Regular Lot				%	
17.Secondary Lot				%	
18.Excess Land				%	
19.Condominium				%	
20.Miscellaneous				%	
				%	
				%	
Fract. Acre		**Acreage/Sites**			
21.Homesite (Frac	21	1.00	100	%	0
22.Baselot (Fract	24	1.44	100	%	0
23.Misc (Fract)	44	1.00	100	%	0
Acres				%	
24.Excess Acres 1				%	
25.Excess Acres 5				%	
26.Excess Acres 2				%	
27.Excess Acres 5				%	
28.Excess Acres 1					
29.Excess acres					

Total Acreage 2.44

Influence Codes

1.Unimproved
2.Excess Frtg
3.Topography
4.Size/Shape
5.Access
6.Restriction
7.Corner Infl
8.Environment
9.Fract Share
Acres
30.Industrial Sit
31.Working Waterf
32.Cultivated Cro
33.Pasture
34.Softwood (Farm
35.Mixed Wood (Fa
36.Hardwood (Farm
37.Softwood
38.Mixed Wood
39.Hardwood
40.Wasteland
41.Gravel Pit
42.Mobile Home Si
43.Location Base
44.Lot Improvemen
45.Waterfront A
46.Lobster Pound

Hancock

Map Lot 223-012 | Account 1904 | Location 8 POPLAR LANE | Card 1 Of 1 | 11/30/2020

Building Style	**1 Conventional**	
0.Uncoded	4.Cape	8.Log
1.Conv.	5.Garrison	9.Other
2.Ranch	6.Colonial	10.Dutch C
3.R Ranch	7.Contemp	11.Farmhou
Dwelling Units	**1**	
Other Units	**0**	
Stories	**1 One Story**	
1.1	4.1.5	7.3.5
2.2	5.1.75	8.
3.3	6.2.5	9.
Exterior Walls	**2 Vinyl/Aluminum**	
0.Uncoded	4.Asbestos	8.Stone
1.Wood	5.Stucco	9.Other
2.Vin/Al	6.Brick Ve	10.Concret
3.Compos.	7.Solid Br	12.
Roof Surface	**1 Asphalt Shingles**	
1.Asphalt	4.Composit	7.
2.Slate	5.Wood	8.
3.Metal	6.Other	9.
SF Masonry Trim	**0**	
OPEN-3-CUSTOM	**0**	
OPEN-4-CUSTOM	**0**	
Year Built	**2004**	
Year Remodeled	**0**	
Foundation	**1 Concrete**	
1.Concrete	4.Wood	7.
2.C Block	5.Slab	8.
3.Br/Stone	6.Piers	9.
Basement	**4 Full Basement**	
1.1/4 Bmt	4.Full Bmt	7.
2.1/2 Bmt	5.None	8.
3.3/4 Bmt	6.	9.None
Bsmt Gar # Cars	**0**	
Wet Basement	**1 Dry Basement**	
1.Dry	4.	7.
2.Damp	5.	8.
3.Wet	6.	9.

SF Bsmt Living	**512**	
Fin Bsmt Grade	**3 100**	
OPEN-5-CUSTOMIZE	**0**	
Heat Type	**100%**	**1 Hot Water BB**
0.Uncoded	4.Steam	8.Fl/Wall
1.HWBB	5.FWA	9.No Heat
2.HWCI	6.GravWA	10.Radiabt
3.H Pump	7.Electric	12.
Cool Type	**100%**	**9 None**
1.Refrig	4.W&C Air	7.
2.Evapor	5.	8.
3.H Pump	6.	9.None
Kitchen Style	**2 Typical**	
1.Modern	4.Obsolete	7.
2.Typical	5.	8.
3.Old Type	6.	9.None
Bath(s) Style	**2 Typical Bath(s)**	
1.Modern	4.Obsolete	7.
2.Typical	5.	8.
3.Old Type	6.	9.None
# Rooms	**6**	
# Bedrooms	**3**	
# Full Baths	**2**	
# Half Baths	**1**	
# Addn Fixtures	**0**	
# Fireplaces	**0**	

TRIO Software
A Division of Harris Computer Systems

Layout	**1 Typical**	
1.Typical	4.	7.
2.Inadeq	5.	8.
3.Horrid	6.	9.
Attic	**9 None**	
1.1/4 Fin	4.Full Fin	7.
2.1/2 Fin	5.Fl/Stair	8.
3.3/4 Fin	6.	9.None
Insulation	**1 Full**	
1.Full	4.Minimal	7.
2.Heavy	5.Partial	8.
3.Capped	6.	9.None
Unfinished %	**0%**	
Grade & Factor	**3 Average 100%**	
1.E Grade	4.B Grade	7.AAA Grad
2.D Grade	5.A Grade	8.SC Grade
3.C Grade	6.AA Grade	9.Same
SQFT (Footprint)	**1504**	
Condition	**4 Average**	
1.Poor	4.Avg	7.V G
2.Fair	5.Avg+	8.Exc
3.Avg-	6.Good	9.Same
Phys. % Good	**0%**	
Funct. % Good	**100%**	
Functional Code	**9 None**	
1.Incomp	4.Delap	7.Seasonal
2.O-Built	5.Bsmt	8.
3.Fire	6.2014 ADJ	9.None
Econ. % Good	**100%**	
Economic Code	**None**	
0.None	3.No Power	7.
1.Location	4.Generate	8.
2.Encroach	9.None	9.
Entrance Code	**0**	
1.Interior	4.Vacant	7.
2.Refusal	5.Estimate	8.
3.Informed	6.	9.
Information Code	**0**	
1.Owner	4.Agent	7.
2.Relative	5.Estimate	8.
3.Tenant	6.Other	9.

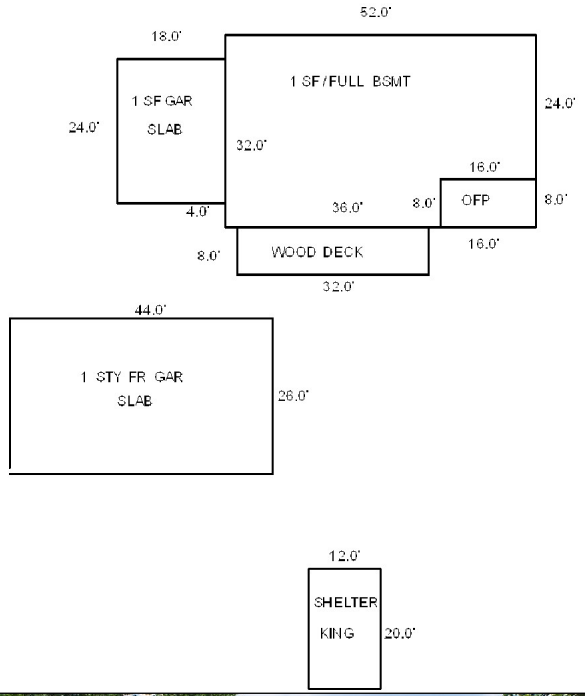

Date Inspected

Additions, Outbuildings & Improvements

Type	Year	Units	Grade	Cond	Phys.	Funct.	Sound Value
21 Open Frame	0	128	0 0	0	0 %	0 %	
81 1 SF GARAGE	0	432	0 0	0	0 %	0 %	
81 1 SF GARAGE	2006	1144	0 0	0	0 %	0 %	
68 Wood Deck	2006	256	0 0	0	0 %	0 %	
					%	%	
					%	%	
					%	%	
					%	%	
					%	%	
					%	%	

1.One Story Fram
2.Two Story Fram
3.Three Story Fr
4.1 & 1/2 Story
5.1 & 3/4 Story
6.2 & 1/2 Story
21.Open Frame Por
22.Encl Frame Por
23.Frame Garage
24.Frame Shed
25.Frame Bay Wind
26.1SFr Overhang
27.Unfin Basement
28.Unfinished Att
29.Finished Attic

Map Lot 223-013 Account 1912 Location 14 POPLAR LANE Card 1 Of 1 11/30/2020

SMITH, HERBERT
SMITH, SUSAN
14 POPLAR LANE
HANCOCK ME 04640

B3775P48 B6257P249

Previous Owner
HACKFORD, SYLVIA M.
14 POPLAR LANE

HANCOCK ME 04640
Sale Date: 7/25/2014

Inspection Witnessed By:

X Date

No./Date	Description	Date Insp.

Notes:

Property Data

Neighborhood	**66 Neighborhood 66**
Tree Growth Year	**0**
TREE GROWTH RECERTIFY	**0**
STATE SALE CODE	**0**
Zone/Land Use	**11 Residential**
Secondary Zone	

Topography

1.Level	4.Below St	7.
2.Rolling	5.Low	8.
3.Above St	6.Swampy	9.

Utilities

1.Public	4.Dr Well	7.Cesspool
2.Water	5.Dug Well	8.
3.Sewer	6.Septic	9.None

Street

1.Paved	4.Proposed	7.
2.Semi Imp	5.	8.
3.Gravel	6.	9.None

REVIEW STRUCTURE YEAR	**0**
RENTAL? 0=NO 1=YES	**0**

Sale Data

Sale Date	**7/25/2014**
Price	**220,500**
Sale Type	**2 Land & Buildings**

1.Land	4.Mobile	7.
2.L & B	5.Other	8.
3.Building	6.	9.

Financing **9 Unknown**

1.Convent	4.Seller	7.
2.FHA/VA	5.Private	8.
3.Assumed	6.Cash	9.Unknown

Validity **1 Arms Length Sale**

1.Valid	4.Split	7.Changes
2.Related	5.Partial	8.Other
3.Distress	6.Exempt	9.Fr Ffclse

Verified **5 Public Record**

1.Buyer	4.Agent	7.Family
2.Seller	5.Pub Rec	8.Other
3.Lender	6.MLS	9.

Assessment Record

Year	Land	Buildings	Exempt	Total
2007	65,500	185,300	0	250,800
2008	65,500	185,300	13,000	237,800
2009	65,500	185,300	13,000	237,800
2010	65,500	185,300	10,000	240,800
2011	65,500	185,300	10,000	240,800
2012	65,500	185,300	10,000	240,800
2013	65,500	185,300	10,000	240,800
2014	65,500	185,300	10,800	240,000
2015	65,500	185,300	11,000	239,800
2016	65,500	185,300	16,500	234,300
2017	65,500	185,300	22,000	228,800
2018	65,500	185,300	22,000	228,800
2019	65,500	185,300	22,000	228,800
2020	65,500	185,300	25,000	225,800

Land Data

Front Foot	Type	Effective Frontage	Effective Depth	Influence Factor	Influence Code
11.Regular Lot				%	
12.Delta Triangle				%	
13.Nabla Triangle				%	
14.Rear Land				%	
15.Miscellaneous				%	
				%	
				%	
Square Foot		**Square Feet**			
16.Regular Lot				%	
17.Secondary Lot				%	
18.Excess Land				%	
19.Condominium				%	
20.Miscellaneous				%	
				%	
				%	
Fract. Acre		**Acreage/Sites**			
21.Homesite (Frac	21	1.00	100	%	0
22.Baselot (Fract	24	1.34	100	%	0
23.Misc (Fract)	44	1.00	100	%	0
Acres				%	
24.Excess Acres 1				%	
25.Excess Acres 5				%	
26.Excess Acres 2				%	
27.Excess Acres 5				%	
28.Excess Acres 1				%	
29.Excess acres				%	

Total Acreage 2.34

Influence Codes

1.Unimproved
2.Excess Frtg
3.Topography
4.Size/Shape
5.Access
6.Restriction
7.Corner Infl
8.Environment
9.Fract Share
Acres
30.Industrial Sit
31.Working Waterf
32.Cultivated Cro
33.Pasture
34.Softwood (Farm
35.Mixed Wood (Fa
36.Hardwood (Farm
37.Softwood
38.Mixed Wood
39.Hardwood
40.Wasteland
41.Gravel Pit
42.Mobile Home Si
43.Location Base
44.Lot Improvemen
45.Waterfront A
46.Lobster Pound

Hancock

Hancock

Map Lot 223-013 | Account 1912 | Location 14 POPLAR LANE | Card 1 Of 1 | 11/30/2020

Building Style	**4 Cape**		
0.Uncoded	4.Cape	8.Log	
1.Conv.	5.Garrison	9.Other	
2.Ranch	6.Colonial	10.Dutch C	
3.R Ranch	7.Contemp	11.Farmhou	
Dwelling Units	**1**		
Other Units	**0**		
Stories	**5 One & 3/4 Story**		
1.1	4.1.5	7.3.5	
2.2	5.1.75	8.	
3.3	6.2.5	9.	
Exterior Walls	**2 Vinyl/Aluminum**		
0.Uncoded	4.Asbestos	8.Stone	
1.Wood	5.Stucco	9.Other	
2.Vin/Al	6.Brick Ve	10.Concret	
3.Compos.	7.Solid Br	12.	
Roof Surface	**1 Asphalt Shingles**		
1.Asphalt	4.Composit	7.	
2.Slate	5.Wood	8.	
3.Metal	6.Other	9.	
SF Masonry Trim	**0**		
OPEN-3-CUSTOM	**0**		
OPEN-4-CUSTOM	**0**		
Year Built	**2004**		
Year Remodeled	**0**		
Foundation	**4 Wood**		
1.Concrete	4.Wood	7.	
2.C Block	5.Slab	8.	
3.Br/Stone	6.Piers	9.	
Basement	**1 1/4 Basement**		
1.1/4 Bmt	4.Full Bmt	7.	
2.1/2 Bmt	5.None	8.	
3.3/4 Bmt	6.	9.None	
Bsmt Gar # Cars	**0**		
Wet Basement	**1 Dry Basement**		
1.Dry	4.	7.	
2.Damp	5.	8.	
3.Wet	6.	9.	

SF Bsmt Living	**0**		
Fin Bsmt Grade	**0 0**		
OPEN-5-CUSTOMIZE	**0**		
Heat Type	**100%**	**1 Hot Water BB**	
0.Uncoded	4.Steam	8.Fl/Wall	
1.HWBB	5.FWA	9.No Heat	
2.HWCI	6.GravWA	10.Radiabt	
3.H Pump	7.Electric	12.	
Cool Type	**100%**	**9 None**	
1.Refrig	4.W&C Air	7.	
2.Evapor	5.	8.	
3.H Pump	6.	9.None	
Kitchen Style	**2 Typical**		
1.Modern	4.Obsolete	7.	
2.Typical	5.	8.	
3.Old Type	6.	9.None	
Bath(s) Style	**2 Typical Bath(s)**		
1.Modern	4.Obsolete	7.	
2.Typical	5.	8.	
3.Old Type	6.	9.None	
# Rooms	**6**		
# Bedrooms	**3**		
# Full Baths	**2**		
# Half Baths	**0**		
# Addn Fixtures	**0**		
# Fireplaces	**0**		

TRIO Software
A Division of Harris Computer Systems

Layout	**1 Typical**		
1.Typical	4.	7.	
2.Inadeq	5.	8.	
3.Horrid	6.	9.	
Attic	**9 None**		
1.1/4 Fin	4.Full Fin	7.	
2.1/2 Fin	5.Fl/Stair	8.	
3.3/4 Fin	6.	9.None	
Insulation	**1 Full**		
1.Full	4.Minimal	7.	
2.Heavy	5.Partial	8.	
3.Capped	6.	9.None	
Unfinished %	**0%**		
Grade & Factor	**3 Average 100%**		
1.E Grade	4.B Grade	7.AAA Grad	
2.D Grade	5.A Grade	8.SC Grade	
3.C Grade	6.AA Grade	9.Same	
SQFT (Footprint)	**896**		
Condition	**4 Average**		
1.Poor	4.Avg	7.V G	
2.Fair	5.Avg+	8.Exc	
3.Avg-	6.Good	9.Same	
Phys. % Good	**0%**		
Funct. % Good	**100%**		
Functional Code	**9 None**		
1.Incomp	4.Delap	7.Seasonal	
2.O-Built	5.Bsmt	8.	
3.Fire	6.2014 ADJ	9.None	
Econ. % Good	**100%**		
Economic Code	**None**		
0.None	3.No Power	7.	
1.Location	4.Generate	8.	
2.Encroach	9.None	9.	
Entrance Code	**0**		
1.Interior	4.Vacant	7.	
2.Refusal	5.Estimate	8.	
3.Informed	6.	9.	
Information Code	**0**		
1.Owner	4.Agent	7.	
2.Relative	5.Estimate	8.	
3.Tenant	6.Other	9.	

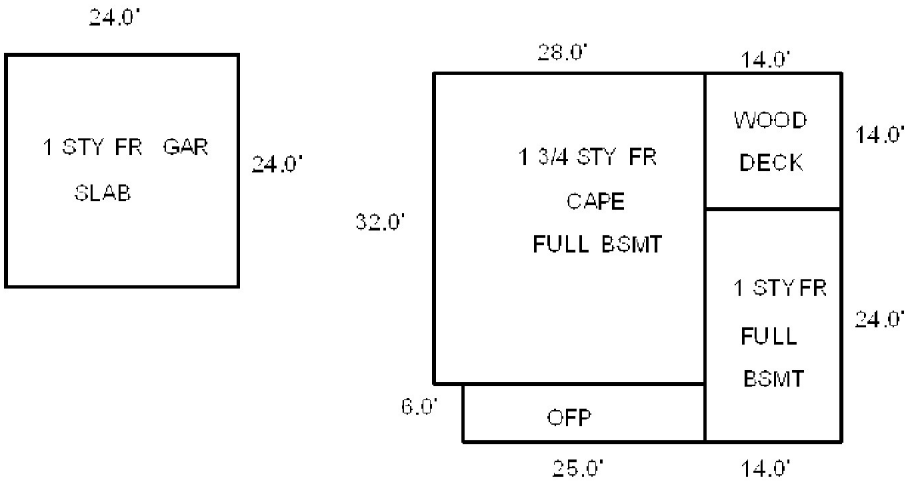

Date Inspected

Additions, Outbuildings & Improvements

Type	Year	Units	Grade	Cond	Phys.	Funct.	Sound Value
1 One Story Frame	0	336	0 0	0	0 %	0 %	
21 Open Frame	0	150	0 0	0	0 %	0 %	
68 Wood Deck	0	196	0 0	0	0 %	0 %	
27 Unfin Basement	0	336	0 0	0	0 %	75 %	
81 1 SF GARAGE	0	576	0 0	0	0 %	0 %	
					%	%	
					%	%	
					%	%	
					%	%	
					%	%	

1.One Story Fram
2.Two Story Fram
3.Three Story Fr
4.1 & 1/2 Story
5.1 & 3/4 Story
6.2 & 1/2 Story
21.Open Frame Por
22.Encl Frame Por
23.Frame Garage
24.Frame Shed
25.Frame Bay Wind
26.1SFr Overhang
27.Unfin Basement
28.Unfinished Att
29.Finished Attic

Map Lot 223-014 Account 1907 Location 36 POPLAR LANE Card 1 Of 1 11/30/2020

DENNISON, VIRGINIA R
36 POPLAR LANE
HANCOCK ME 04640

B4324P308 B6934P896

Previous Owner
CLOUGH, HELEN ET AL
8 STRAWBERRY HILL

BAR HARBOR ME 04609
Sale Date: 10/20/2005

Inspection Witnessed By:

X Date

No./Date	Description	Date Insp.

Notes:

Hancock

Property Data

Neighborhood	**66 Neighborhood 66**
Tree Growth Year	**0**
TREE GROWTH RECERTIFY	**0**
STATE SALE CODE	**0**
Zone/Land Use	**11 Residential**
Secondary Zone	

Topography

1.Level	4.Below St	7.
2.Rolling	5.Low	8.
3.Above St	6.Swampy	9.

Utilities

1.Public	4.Dr Well	7.Cesspool
2.Water	5.Dug Well	8.
3.Sewer	6.Septic	9.None

Street **1 Paved**

1.Paved	4.Proposed	7.
2.Semi Imp	5.	8.
3.Gravel	6.	9.None

REVIEW STRUCTURE YEAR	**0**
RENTAL? 0=NO 1=YES	**0**

Sale Data

Sale Date	**1/28/2019**
Price	**225,000**

Sale Type **2 Land & Buildings**

1.Land	4.Mobile	7.
2.L & B	5.Other	8.
3.Building	6.	9.

Financing **9 Unknown**

1.Convent	4.Seller	7.
2.FHA/VA	5.Private	8.
3.Assumed	6.Cash	9.Unknown

Validity **1 Arms Length Sale**

1.Valid	4.Split	7.Changes
2.Related	5.Partial	8.Other
3.Distress	6.Exempt	9.Fr Ffclse

Verified **5 Public Record**

1.Buyer	4.Agent	7.Family
2.Seller	5.Pub Rec	8.Other
3.Lender	6.MLS	9.

Assessment Record

Year	Land	Buildings	Exempt	Total
2007	49,900	151,400	13,000	188,300
2008	49,900	151,400	13,000	188,300
2009	49,900	151,400	13,000	188,300
2010	49,900	151,400	10,000	191,300
2011	49,900	151,400	10,000	191,300
2012	49,900	151,400	10,000	191,300
2013	49,900	151,400	10,000	191,300
2014	49,900	151,400	10,800	190,500
2015	49,900	151,400	11,000	190,300
2016	49,900	151,400	16,500	184,800
2017	49,900	149,800	22,000	177,700
2018	49,900	149,800	22,000	177,700
2019	49,900	149,800	22,000	177,700
2020	49,900	149,800	25,000	174,700

Land Data

Front Foot	Type	Effective Frontage	Effective Depth	Influence Factor	Influence Code
11.Regular Lot				%	
12.Delta Triangle				%	
13.Nabla Triangle				%	
14.Rear Land				%	
15.Miscellaneous				%	
				%	
				%	
Square Foot		**Square Feet**			
16.Regular Lot				%	
17.Secondary Lot				%	
18.Excess Land				%	
19.Condominium				%	
20.Miscellaneous				%	
				%	
				%	
Fract. Acre		**Acreage/Sites**			
21.Homesite (Frac	21	1.00	70	%	0
22.Baselot (Fract	24	1.38	70	%	0
23.Misc (Fract)	44	1.00	100	%	0
Acres				%	
24.Excess Acres 1				%	
25.Excess Acres 5				%	
26.Excess Acres 2				%	
27.Excess Acres 5				%	
28.Excess Acres 1				%	
29.Excess acres				%	

Total Acreage 2.38

Influence Codes

1.Unimproved
2.Excess Frtg
3.Topography
4.Size/Shape
5.Access
6.Restriction
7.Corner Infl
8.Environment
9.Fract Share
Acres
30.Industrial Sit
31.Working Waterf
32.Cultivated Cro
33.Pasture
34.Softwood (Farm
35.Mixed Wood (Fa
36.Hardwood (Farm
37.Softwood
38.Mixed Wood
39.Hardwood
40.Wasteland
41.Gravel Pit
42.Mobile Home Si
43.Location Base
44.Lot Improvemen
45.Waterfront A
46.Lobster Pound

Hancock

Map Lot 223-014 | Account 1907 | Location 36 POPLAR LANE | Card 1 Of 1 | 11/30/2020

Building Style **2 Ranch**		
0.Uncoded	4.Cape	8.Log
1.Conv.	5.Garrison	9.Other
2.Ranch	6.Colonial	10.Dutch C
3.R Ranch	7.Contemp	11.Farmhou
Dwelling Units **1**		
Other Units **0**		
Stories **1 One Story**		
1.1	4.1.5	7.3.5
2.2	5.1.75	8.
3.3	6.2.5	9.
Exterior Walls **2 Vinyl/Aluminum**		
0.Uncoded	4.Asbestos	8.Stone
1.Wood	5.Stucco	9.Other
2.Vin/Al	6.Brick Ve	10.Concret
3.Compos.	7.Solid Br	12.
Roof Surface **1 Asphalt Shingles**		
1.Asphalt	4.Composit	7.
2.Slate	5.Wood	8.
3.Metal	6.Other	9.
SF Masonry Trim **0**		
OPEN-3-CUSTOM **0**		
OPEN-4-CUSTOM **0**		
Year Built **2005**		
Year Remodeled **0**		
Foundation **1 Concrete**		
1.Concrete	4.Wood	7.
2.C Block	5.Slab	8.
3.Br/Stone	6.Piers	9.
Basement **4 Full Basement**		
1.1/4 Bmt	4.Full Bmt	7.
2.1/2 Bmt	5.None	8.
3.3/4 Bmt	6.	9.None
Bsmt Gar # Cars **0**		
Wet Basement **1 Dry Basement**		
1.Dry	4.	7.
2.Damp	5.	8.
3.Wet	6.	9.

SF Bsmt Living **0**		
Fin Bsmt Grade **0 0**		
OPEN-5-CUSTOMIZE **0**		
Heat Type **100%** **1 Hot Water BB**		
0.Uncoded	4.Steam	8.Fl/Wall
1.HWBB	5.FWA	9.No Heat
2.HWCI	6.GravWA	10.Radiabt
3.H Pump	7.Electric	12.
Cool Type **100%** **9 None**		
1.Refrig	4.W&C Air	7.
2.Evapor	5.	8.
3.H Pump	6.	9.None
Kitchen Style **2 Typical**		
1.Modern	4.Obsolete	7.
2.Typical	5.	8.
3.Old Type	6.	9.None
Bath(s) Style **2 Typical Bath(s)**		
1.Modern	4.Obsolete	7.
2.Typical	5.	8.
3.Old Type	6.	9.None
# Rooms **6**		
# Bedrooms **3**		
# Full Baths **2**		
# Half Baths **0**		
# Addn Fixtures **0**		
# Fireplaces **0**		

TRIO Software
A Division of Harris Computer Systems

Layout **1 Typical**		
1.Typical	4.	7.
2.Inadeq	5.	8.
3.Horrid	6.	9.
Attic **9 None**		
1.1/4 Fin	4.Full Fin	7.
2.1/2 Fin	5.Fl/Stair	8.
3.3/4 Fin	6.	9.None
Insulation **1 Full**		
1.Full	4.Minimal	7.
2.Heavy	5.Partial	8.
3.Capped	6.	9.None
Unfinished % **0%**		
Grade & Factor **3 Average 110%**		
1.E Grade	4.B Grade	7.AAA Grad
2.D Grade	5.A Grade	8.SC Grade
3.C Grade	6.AA Grade	9.Same
SQFT (Footprint) **1114**		
Condition **4 Average**		
1.Poor	4.Avg	7.V G
2.Fair	5.Avg+	8.Exc
3.Avg-	6.Good	9.Same
Phys. % Good **0%**		
Funct. % Good **100%**		
Functional Code **9 None**		
1.Incomp	4.Delap	7.Seasonal
2.O-Built	5.Bsmt	8.
3.Fire	6.2014 ADJ	9.None
Econ. % Good **100%**		
Economic Code **None**		
0.None	3.No Power	7.
1.Location	4.Generate	8.
2.Encroach	9.None	9.
Entrance Code **0**		
1.Interior	4.Vacant	7.
2.Refusal	5.Estimate	8.
3.Informed	6.	9.
Information Code **0**		
1.Owner	4.Agent	7.
2.Relative	5.Estimate	8.
3.Tenant	6.Other	9.

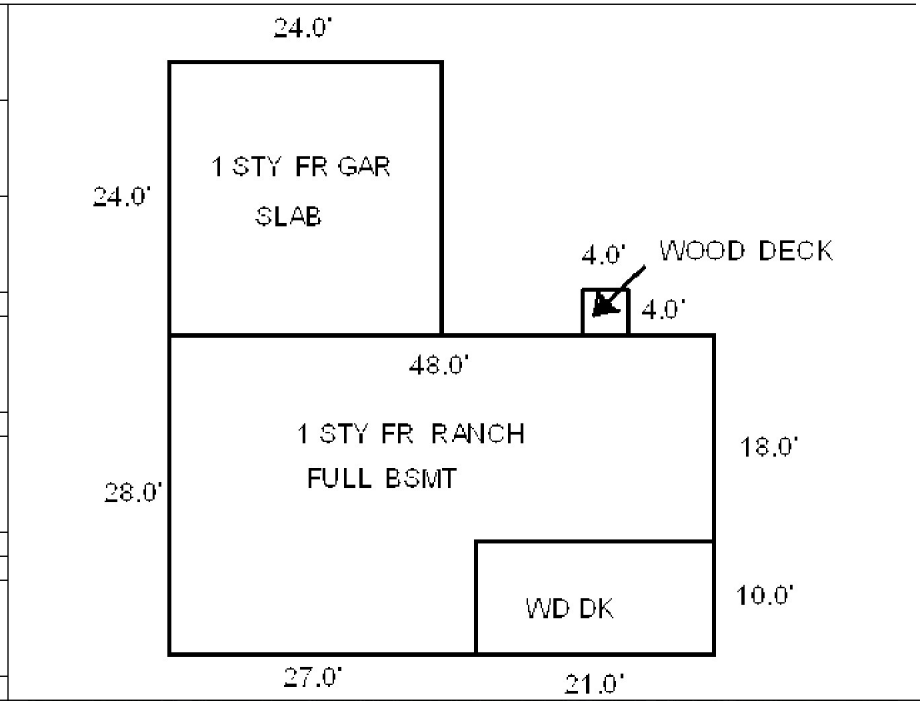

Date Inspected

Additions, Outbuildings & Improvements

Type	Year	Units	Grade	Cond	Phys.	Funct.	Sound Value
81 1 SF GARAGE	0	276	0 0	0	0 %	0 %	
68 Wood Deck	0	210	0 0	0	0 %	0 %	
68 Wood Deck	0	16	0 0	0	0 %	0 %	
					%	%	
					%	%	
					%	%	
					%	%	
					%	%	
					%	%	
					%	%	

1.One Story Fram
2.Two Story Fram
3.Three Story Fr
4.1 & 1/2 Story
5.1 & 3/4 Story
6.2 & 1/2 Story
21.Open Frame Por
22.Encl Frame Por
23.Frame Garage
24.Frame Shed
25.Frame Bay Wind
26.1SFr Overhang
27.Unfin Basement
28.Unfinished Att
29.Finished Attic

Map Lot 223-015 Account 1909 Location 42 POPLAR LANE Card 1 Of 1 11/30/2020

BEABER, CLYDE
ROSSIGNOL-BEABER, ROSSIGNOL-BEABER, BETTY
PO BOX 1316
ELLSWORTH ME 04605

B948P339 B4171P110 B4530P131

Previous Owner
RAYBOURN, LARRY D & DEBRA L
PO BOX 542

ELLSWORTH ME 04605
Sale Date: 6/30/2006

Previous Owner
CLOUGH, HELEN ET AL
8 STRAWBERRY HILL

BAR HARBOR ME 04609
Sale Date: 4/13/2005

Inspection Witnessed By:

X Date

No./Date	Description	Date Insp.

Notes:

Hancock

Property Data

Neighborhood **66 Neighborhood 66**

Tree Growth Year **0**

TREE GROWTH RECERTIFY **0**

STATE SALE CODE **0**

Zone/Land Use **11 Residential**

Secondary Zone

Topography

1.Level 4.Below St 7.
2.Rolling 5.Low 8.
3.Above St 6.Swampy 9.

Utilities

1.Public 4.Dr Well 7.Cesspool
2.Water 5.Dug Well 8.
3.Sewer 6.Septic 9.None

Street **1 Paved**

1.Paved 4.Proposed 7.
2.Semi Imp 5. 8.
3.Gravel 6. 9.None

REVIEW STRUCTURE YEAR **0**

RENTAL? 0=NO 1=YES **0**

Sale Data

Sale Date **6/30/2006**

Price **270,000**

Sale Type **2 Land & Buildings**

1.Land 4.Mobile 7.
2.L & B 5.Other 8.
3.Building 6. 9.

Financing **9 Unknown**

1.Convent 4.Seller 7.
2.FHA/VA 5.Private 8.
3.Assumed 6.Cash 9.Unknown

Validity **1 Arms Length Sale**

1.Valid 4.Split 7.Changes
2.Related 5.Partial 8.Other
3.Distress 6.Exempt 9.Fr Ffclse

Verified **5 Public Record**

1.Buyer 4.Agent 7.Family
2.Seller 5.Pub Rec 8.Other
3.Lender 6.MLS 9.

Assessment Record

Year	Land	Buildings	Exempt	Total
2007	49,900	275,000	0	324,900
2008	49,900	275,000	0	324,900
2009	49,900	275,000	0	324,900
2010	49,900	275,000	0	324,900
2011	49,900	275,000	10,000	314,900
2012	49,900	275,000	10,000	314,900
2013	49,900	275,000	10,000	314,900
2014	49,900	275,000	10,800	314,100
2015	49,900	275,000	11,000	313,900
2016	49,900	275,000	16,500	308,400
2017	49,900	272,200	22,000	300,100
2018	49,900	272,200	22,000	300,100
2019	49,900	272,200	22,000	300,100
2020	49,900	272,200	25,000	297,100

Land Data

Front Foot	Type	Effective Frontage	Effective Depth	Influence Factor	Influence Code
11.Regular Lot				%	
12.Delta Triangle				%	
13.Nabla Triangle				%	
14.Rear Land				%	
15.Miscellaneous				%	
				%	
				%	
Square Foot		**Square Feet**			
16.Regular Lot				%	
17.Secondary Lot				%	
18.Excess Land				%	
19.Condominium				%	
20.Miscellaneous				%	
				%	
				%	
Fract. Acre		**Acreage/Sites**			
21.Homesite (Frac	21	1.00		70 %	0
22.Baselot (Fract	24	1.33		70 %	0
23.Misc (Fract)	44	1.00		100 %	0
Acres				%	
24.Excess Acres 1				%	
25.Excess Acres 5				%	
26.Excess Acres 2				%	
27.Excess Acres 5				%	
28.Excess Acres 1				%	
29.Excess acres				%	

Total Acreage 2.33

Influence Codes

1.Unimproved
2.Excess Frtg
3.Topography
4.Size/Shape
5.Access
6.Restriction
7.Corner Infl
8.Environment
9.Fract Share
Acres
30.Industrial Sit
31.Working Waterf
32.Cultivated Cro
33.Pasture
34.Softwood (Farm
35.Mixed Wood (Fa
36.Hardwood (Farm
37.Softwood
38.Mixed Wood
39.Hardwood
40.Wasteland
41.Gravel Pit
42.Mobile Home Si
43.Location Base
44.Lot Improvemen
45.Waterfront A
46.Lobster Pound

Hancock

Map Lot 223-015 | Account 1909 | Location 42 POPLAR LANE | Card 1 Of 1 | 11/30/2020

Building Style	**2 Ranch**	
0.Uncoded	4.Cape	8.Log
1.Conv.	5.Garrison	9.Other
2.Ranch	6.Colonial	10.Dutch C
3.R Ranch	7.Contemp	11.Farmhou
Dwelling Units	**1**	
Other Units	**0**	
Stories	**1 One Story**	
1.1	4.1.5	7.3.5
2.2	5.1.75	8.
3.3	6.2.5	9.
Exterior Walls	**2 Vinyl/Aluminum**	
0.Uncoded	4.Asbestos	8.Stone
1.Wood	5.Stucco	9.Other
2.Vin/Al	6.Brick Ve	10.Concret
3.Compos.	7.Solid Br	12.
Roof Surface	**1 Asphalt Shingles**	
1.Asphalt	4.Composit	7.
2.Slate	5.Wood	8.
3.Metal	6.Other	9.
SF Masonry Trim	**0**	
OPEN-3-CUSTOM	**0**	
OPEN-4-CUSTOM	**0**	
Year Built	**2005**	
Year Remodeled	**0**	
Foundation	**1 Concrete**	
1.Concrete	4.Wood	7.
2.C Block	5.Slab	8.
3.Br/Stone	6.Piers	9.
Basement	**4 Full Basement**	
1.1/4 Bmt	4.Full Bmt	7.
2.1/2 Bmt	5.None	8.
3.3/4 Bmt	6.	9.None
Bsmt Gar # Cars	**0**	
Wet Basement	**1 Dry Basement**	
1.Dry	4.	7.
2.Damp	5.	8.
3.Wet	6.	9.

SF Bsmt Living	**0**	
Fin Bsmt Grade	**0 0**	
OPEN-5-CUSTOMIZE	**0**	
Heat Type	**100%**	**1 Hot Water BB**
0.Uncoded	4.Steam	8.Fl/Wall
1.HWBB	5.FWA	9.No Heat
2.HWCI	6.GravWA	10.Radiabt
3.H Pump	7.Electric	12.
Cool Type	**100%**	**9 None**
1.Refrig	4.W&C Air	7.
2.Evapor	5.	8.
3.H Pump	6.	9.None
Kitchen Style	**2 Typical**	
1.Modern	4.Obsolete	7.
2.Typical	5.	8.
3.Old Type	6.	9.None
Bath(s) Style	**2 Typical Bath(s)**	
1.Modern	4.Obsolete	7.
2.Typical	5.	8.
3.Old Type	6.	9.None
# Rooms	**6**	
# Bedrooms	**3**	
# Full Baths	**2**	
# Half Baths	**0**	
# Addn Fixtures	**0**	
# Fireplaces	**0**	

TRIO Software
A Division of Harris Computer Systems

Layout	**1 Typical**	
1.Typical	4.	7.
2.Inadeq	5.	8.
3.Horrid	6.	9.
Attic	**9 None**	
1.1/4 Fin	4.Full Fin	7.
2.1/2 Fin	5.Fl/Stair	8.
3.3/4 Fin	6.	9.None
Insulation	**1 Full**	
1.Full	4.Minimal	7.
2.Heavy	5.Partial	8.
3.Capped	6.	9.None
Unfinished %	**0%**	
Grade & Factor	**3 Average 110%**	
1.E Grade	4.B Grade	7.AAA Grad
2.D Grade	5.A Grade	8.SC Grade
3.C Grade	6.AA Grade	9.Same
SQFT (Footprint)	**2200**	
Condition	**4 Average**	
1.Poor	4.Avg	7.V G
2.Fair	5.Avg+	8.Exc
3.Avg-	6.Good	9.Same
Phys. % Good	**0%**	
Funct. % Good	**100%**	
Functional Code	**9 None**	
1.Incomp	4.Delap	7.Seasonal
2.O-Built	5.Bsmt	8.
3.Fire	6.2014 ADJ	9.None
Econ. % Good	**100%**	
Economic Code	**None**	
0.None	3.No Power	7.
1.Location	4.Generate	8.
2.Encroach	9.None	9.
Entrance Code	**0**	
1.Interior	4.Vacant	7.
2.Refusal	5.Estimate	8.
3.Informed	6.	9.
Information Code	**0**	
1.Owner	4.Agent	7.
2.Relative	5.Estimate	8.
3.Tenant	6.Other	9.

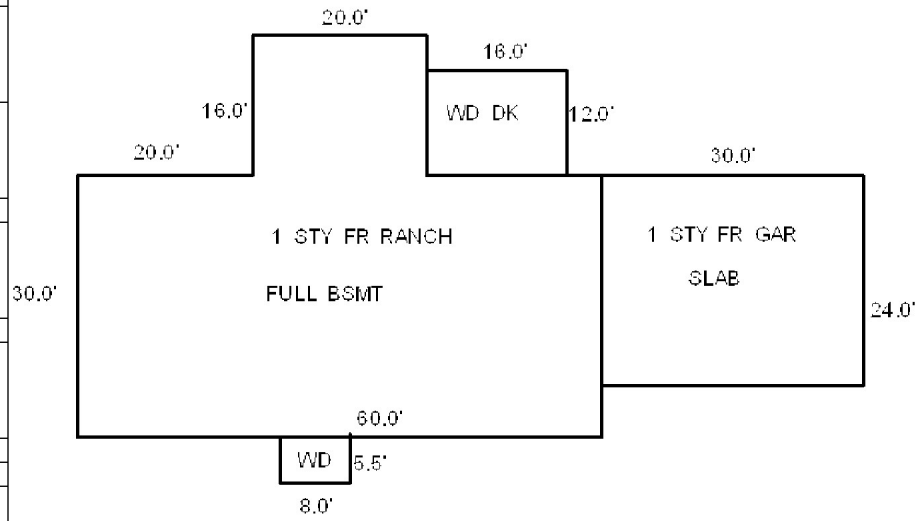

Date Inspected

Additions, Outbuildings & Improvements

Type	Year	Units	Grade	Cond	Phys.	Funct.	Sound Value
81 1 SF GARAGE	0	720	0 0	0	0 %	0 %	
68 Wood Deck	0	192	0 0	0	0 %	0 %	
68 Wood Deck	0	44	0 0	0	0 %	0 %	
					%	%	
					%	%	
					%	%	
					%	%	
					%	%	
					%	%	
					%	%	

1.One Story Fram
2.Two Story Fram
3.Three Story Fr
4.1 & 1/2 Story
5.1 & 3/4 Story
6.2 & 1/2 Story
21.Open Frame Por
22.Encl Frame Por
23.Frame Garage
24.Frame Shed
25.Frame Bay Wind
26.1SFr Overhang
27.Unfin Basement
28.Unfinished Att
29.Finished Attic

Map Lot 223-016 Account 2005 Location WASHINGTON JUNCTION ROAD Card 1 Of 1 11/30/2020

JOHNSON, FREDA (TIC) & DORR, HEIDI (TIC) &
CLOUGH, JAYSON (TIC)
18 EARLES WAY
HANCOCK ME 04640

B6087P336

Property Data

Neighborhood **65 Neighborhood 65**

Tree Growth Year **0**

TREE GROWTH RECERTIFY **0**

STATE SALE CODE **0**

Zone/Land Use **11 Residential**

Secondary Zone

Topography **2 Rolling** **4 Below Street**

1.Level 4.Below St 7.
2.Rolling 5.Low 8.
3.Above St 6.Swampy 9.

Utilities

1.Public 4.Dr Well 7.Cesspool
2.Water 5.Dug Well 8.
3.Sewer 6.Septic 9.None

Street **3 Gravel**

1.Paved 4.Proposed 7.
2.Semi Imp 5. 8.
3.Gravel 6. 9.None

REVIEW STRUCTURE YEAR **0**

RENTAL? 0=NO 1=YES **0**

Sale Data

Sale Date

Price

Sale Type

1.Land 4.Mobile 7.
2.L & B 5.Other 8.
3.Building 6. 9.

Financing

1.Convent 4.Seller 7.
2.FHA/VA 5.Private 8.
3.Assumed 6.Cash 9.Unknown

Validity

1.Valid 4.Split 7.Changes
2.Related 5.Partial 8.Other
3.Distress 6.Exempt 9.Fr Ffclse

Verified

1.Buyer 4.Agent 7.Family
2.Seller 5.Pub Rec 8.Other
3.Lender 6.MLS 9.

Assessment Record

Year	Land	Buildings	Exempt	Total
2014	0	0	0	0
2015	0	0	0	0
2016	62,000	0	0	62,000
2017	62,000	0	0	62,000
2018	56,300	0	0	56,300
2019	56,300	0	0	56,300
2020	56,300	0	0	56,300

Land Data

Front Foot

11.Regular Lot
12.Delta Triangle
13.Nabla Triangle
14.Rear Land
15.Miscellaneous

Square Foot

16.Regular Lot
17.Secondary Lot
18.Excess Land
19.Condominium
20.Miscellaneous

Fract. Acre

21.Homesite (Frac
22.Baselot (Fract
23.Misc (Fract)
Acres
24.Excess Acres 1
25.Excess Acres 5
26.Excess Acres 2
27.Excess Acres 5
28.Excess Acres 1
29.Excess acres

Type	Effective Frontage	Effective Depth	Influence Factor	Influence Code
			%	
			%	
			%	
			%	
			%	
			%	
			%	
	Square Feet			
			%	
			%	
			%	
			%	
			%	
			%	
			%	
	Acreage/Sites			
21	1.00		100 %	0
24	4.00		100 %	0
25	20.00		100 %	0
26	0.45		100 %	0
40	15.30		100 %	0
			%	
			%	

Total Acreage 40.75

Influence Codes

1.Unimproved
2.Excess Frtg
3.Topography
4.Size/Shape
5.Access
6.Restriction
7.Corner Infl
8.Environment
9.Fract Share
Acres
30.Industrial Sit
31.Working Waterf
32.Cultivated Cro
33.Pasture
34.Softwood (Farm
35.Mixed Wood (Fa
36.Hardwood (Farm
37.Softwood
38.Mixed Wood
39.Hardwood
40.Wasteland
41.Gravel Pit
42.Mobile Home Si
43.Location Base
44.Lot Improvemen
45.Waterfront A
46.Lobster Pound

Inspection Witnessed By:

X Date

No./Date	Description	Date Insp.

Notes:

Hancock

Hancock

Map Lot 223-016 | Account 2005 | Location WASHINGTON JUNCTION ROAD | Card 1 Of 1 | 11/30/2020

Building Style		
0.Uncoded	4.Cape	8.Log
1.Conv.	5.Garrison	9.Other
2.Ranch	6.Colonial	10.Dutch C
3.R Ranch	7.Contemp	11.Farmhou

Dwelling Units
Other Units

Stories		
1.1	4.1.5	7.3.5
2.2	5.1.75	8.
3.3	6.2.5	9.

Exterior Walls		
0.Uncoded	4.Asbestos	8.Stone
1.Wood	5.Stucco	9.Other
2.Vin/Al	6.Brick Ve	10.Concret
3.Compos.	7.Solid Br	12.

Roof Surface		
1.Asphalt	4.Composit	7.
2.Slate	5.Wood	8.
3.Metal	6.Other	9.

SF Masonry Trim
OPEN-3-CUSTOM
OPEN-4-CUSTOM
Year Built
Year Remodeled

Foundation		
1.Concrete	4.Wood	7.
2.C Block	5.Slab	8.
3.Br/Stone	6.Piers	9.

Basement		
1.1/4 Bmt	4.Full Bmt	7.
2.1/2 Bmt	5.None	8.
3.3/4 Bmt	6.	9.None

Bsmt Gar # Cars

Wet Basement		
1.Dry	4.	7.
2.Damp	5.	8.
3.Wet	6.	9.

SF Bsmt Living
Fin Bsmt Grade
OPEN-5-CUSTOMIZE

Heat Type **100%**		
0.Uncoded	4.Steam	8.Fl/Wall
1.HWBB	5.FWA	9.No Heat
2.HWCI	6.GravWA	10.Radiabt
3.H Pump	7.Electric	12.

Cool Type **100%**		
1.Refrig	4.W&C Air	7.
2.Evapor	5.	8.
3.H Pump	6.	9.None

Kitchen Style		
1.Modern	4.Obsolete	7.
2.Typical	5.	8.
3.Old Type	6.	9.None

Bath(s) Style		
1.Modern	4.Obsolete	7.
2.Typical	5.	8.
3.Old Type	6.	9.None

Rooms
Bedrooms
Full Baths
Half Baths
Addn Fixtures
Fireplaces

TRIO Software
A Division of Harris Computer Systems

Layout		
1.Typical	4.	7.
2.Inadeq	5.	8.
3.Horrid	6.	9.

Attic		
1.1/4 Fin	4.Full Fin	7.
2.1/2 Fin	5.Fl/Stair	8.
3.3/4 Fin	6.	9.None

Insulation		
1.Full	4.Minimal	7.
2.Heavy	5.Partial	8.
3.Capped	6.	9.None

Unfinished %

Grade & Factor		
1.E Grade	4.B Grade	7.AAA Grad
2.D Grade	5.A Grade	8.SC Grade
3.C Grade	6.AA Grade	9.Same

SQFT (Footprint)

Condition		
1.Poor	4.Avg	7.V G
2.Fair	5.Avg+	8.Exc
3.Avg-	6.Good	9.Same

Phys. % Good
Funct. % Good

Functional Code		
1.Incomp	4.Delap	7.Seasonal
2.O-Built	5.Bsmt	8.
3.Fire	6.2014 ADJ	9.None

Econ. % Good

Economic Code		
0.None	3.No Power	7.
1.Location	4.Generate	8.
2.Encroach	9.None	9.

Entrance Code **0**		
1.Interior	4.Vacant	7.
2.Refusal	5.Estimate	8.
3.Informed	6.	9.

Information Code **0**		
1.Owner	4.Agent	7.
2.Relative	5.Estimate	8.
3.Tenant	6.Other	9.

Date Inspected

Additions, Outbuildings & Improvements

Type	Year	Units	Grade	Cond	Phys.	Funct.	Sound Value
					%	%	
					%	%	
					%	%	
					%	%	
					%	%	
					%	%	
					%	%	
					%	%	
					%	%	
					%	%	

1.One Story Fram
2.Two Story Fram
3.Three Story Fr
4.1 & 1/2 Story
5.1 & 3/4 Story
6.2 & 1/2 Story
21.Open Frame Por
22.Encl Frame Por
23.Frame Garage
24.Frame Shed
25.Frame Bay Wind
26.1SFr Overhang
27.Unfin Basement
28.Unfinished Att
29.Finished Attic

Map Lot 223-016-001 Account 2082 Location CEDAR GROVE Card 1 Of 1 11/30/2020

LEEMAN, GARY J
P O BOX 356
HANCOCK ME 04640

B4907P113 B6892P376

Previous Owner
TOWN OF HANCOCK
C/O LEEMAN, GARY J.
P O BOX 356
HANCOCK ME 04640
Sale Date: 6/06/2018

Inspection Witnessed By:

X Date

No./Date	Description	Date Insp.

Notes:

Hancock

Property Data

Neighborhood	**65 Neighborhood 65**
Tree Growth Year	**0**
TREE GROWTH RECERTIFY	**0**
STATE SALE CODE	**0**
Zone/Land Use	**11 Residential**
Secondary Zone	

Topography

1.Level	4.Below St	7.
2.Rolling	5.Low	8.
3.Above St	6.Swampy	9.

Utilities

1.Public	4.Dr Well	7.Cesspool
2.Water	5.Dug Well	8.
3.Sewer	6.Septic	9.None

Street **3 Gravel**

1.Paved	4.Proposed	7.
2.Semi Imp	5.	8.
3.Gravel	6.	9.None

REVIEW STRUCTURE YEAR	**0**
RENTAL? 0=NO 1=YES	**0**

Sale Data

Sale Date	**10/27/2007**
Price	**10,000**

Sale Type **1 Land Only**

1.Land	4.Mobile	7.
2.L & B	5.Other	8.
3.Building	6.	9.

Financing **9 Unknown**

1.Convent	4.Seller	7.
2.FHA/VA	5.Private	8.
3.Assumed	6.Cash	9.Unknown

Validity **8 Other Non Valid**

1.Valid	4.Split	7.Changes
2.Related	5.Partial	8.Other
3.Distress	6.Exempt	9.Fr Ffclse

Verified **5 Public Record**

1.Buyer	4.Agent	7.Family
2.Seller	5.Pub Rec	8.Other
3.Lender	6.MLS	9.

Assessment Record

Year	Land	Buildings	Exempt	Total
2008	25,100	0	0	25,100
2009	25,100	0	0	25,100
2010	25,100	0	0	25,100
2011	25,100	0	0	25,100
2012	25,100	0	0	25,100
2013	25,100	0	0	25,100
2014	25,100	0	0	25,100
2015	25,100	0	0	25,100
2016	25,100	0	0	25,100
2017	25,100	0	0	25,100
2018	25,100	0	0	25,100
2019	25,100	0	0	25,100
2020	25,100	0	0	25,100

Land Data

Front Foot	Type	Effective Frontage	Effective Depth	Influence Factor	Influence Code
11.Regular Lot				%	
12.Delta Triangle				%	
13.Nabla Triangle				%	
14.Rear Land				%	
15.Miscellaneous				%	
				%	
				%	
Square Foot		**Square Feet**			
16.Regular Lot				%	
17.Secondary Lot				%	
18.Excess Land				%	
19.Condominium				%	
20.Miscellaneous				%	
				%	
				%	
Fract. Acre		**Acreage/Sites**			
21.Homesite (Frac	21	1.00	100	%	0
22.Baselot (Fract	24	0.13	100	%	0
23.Misc (Fract)				%	
Acres				%	
24.Excess Acres 1				%	
25.Excess Acres 5				%	
26.Excess Acres 2				%	
27.Excess Acres 5				%	
28.Excess Acres 1				%	
29.Excess acres				%	

Total Acreage 1.13

Influence Codes

1.Unimproved
2.Excess Frtg
3.Topography
4.Size/Shape
5.Access
6.Restriction
7.Corner Infl
8.Environment
9.Fract Share
Acres
30.Industrial Sit
31.Working Waterf
32.Cultivated Cro
33.Pasture
34.Softwood (Farm
35.Mixed Wood (Fa
36.Hardwood (Farm
37.Softwood
38.Mixed Wood
39.Hardwood
40.Wasteland
41.Gravel Pit
42.Mobile Home Si
43.Location Base
44.Lot Improvemen
45.Waterfront A
46.Lobster Pound

Hancock

Map Lot 223-016-001 | Account 2082 | Location CEDAR GROVE | Card 1 Of 1 | 11/30/2020

Building Style		
0.Uncoded	4.Cape	8.Log
1.Conv.	5.Garrison	9.Other
2.Ranch	6.Colonial	10.Dutch C
3.R Ranch	7.Contemp	11.Farmhou

Dwelling Units

Other Units

Stories		
1.1	4.1.5	7.3.5
2.2	5.1.75	8.
3.3	6.2.5	9.

Exterior Walls		
0.Uncoded	4.Asbestos	8.Stone
1.Wood	5.Stucco	9.Other
2.Vin/Al	6.Brick Ve	10.Concret
3.Compos.	7.Solid Br	12.

Roof Surface		
1.Asphalt	4.Composit	7.
2.Slate	5.Wood	8.
3.Metal	6.Other	9.

SF Masonry Trim

OPEN-3-CUSTOM

OPEN-4-CUSTOM

Year Built

Year Remodeled

Foundation		
1.Concrete	4.Wood	7.
2.C Block	5.Slab	8.
3.Br/Stone	6.Piers	9.

Basement		
1.1/4 Bmt	4.Full Bmt	7.
2.1/2 Bmt	5.None	8.
3.3/4 Bmt	6.	9.None

Bsmt Gar # Cars

Wet Basement		
1.Dry	4.	7.
2.Damp	5.	8.
3.Wet	6.	9.

SF Bsmt Living

Fin Bsmt Grade

OPEN-5-CUSTOMIZE

Heat Type **100%**		
0.Uncoded	4.Steam	8.Fl/Wall
1.HWBB	5.FWA	9.No Heat
2.HWCI	6.GravWA	10.Radiabt
3.H Pump	7.Electric	12.

Cool Type **100%**		
1.Refrig	4.W&C Air	7.
2.Evapor	5.	8.
3.H Pump	6.	9.None

Kitchen Style		
1.Modern	4.Obsolete	7.
2.Typical	5.	8.
3.Old Type	6.	9.None

Bath(s) Style		
1.Modern	4.Obsolete	7.
2.Typical	5.	8.
3.Old Type	6.	9.None

Rooms

Bedrooms

Full Baths

Half Baths

Addn Fixtures

Fireplaces

TRIO Software
A Division of Harris Computer Systems

Layout		
1.Typical	4.	7.
2.Inadeq	5.	8.
3.Horrid	6.	9.

Attic		
1.1/4 Fin	4.Full Fin	7.
2.1/2 Fin	5.Fl/Stair	8.
3.3/4 Fin	6.	9.None

Insulation		
1.Full	4.Minimal	7.
2.Heavy	5.Partial	8.
3.Capped	6.	9.None

Unfinished %

Grade & Factor		
1.E Grade	4.B Grade	7.AAA Grad
2.D Grade	5.A Grade	8.SC Grade
3.C Grade	6.AA Grade	9.Same

SQFT (Footprint)

Condition		
1.Poor	4.Avg	7.V G
2.Fair	5.Avg+	8.Exc
3.Avg-	6.Good	9.Same

Phys. % Good

Funct. % Good

Functional Code		
1.Incomp	4.Delap	7.Seasonal
2.O-Built	5.Bsmt	8.
3.Fire	6.2014 ADJ	9.None

Econ. % Good

Economic Code		
0.None	3.No Power	7.
1.Location	4.Generate	8.
2.Encroach	9.None	9.

Entrance Code **0**		
1.Interior	4.Vacant	7.
2.Refusal	5.Estimate	8.
3.Informed	6.	9.

Information Code **0**		
1.Owner	4.Agent	7.
2.Relative	5.Estimate	8.
3.Tenant	6.Other	9.

Date Inspected

Additions, Outbuildings & Improvements

Type	Year	Units	Grade	Cond	Phys.	Funct.	Sound Value
					%	%	
					%	%	
					%	%	
					%	%	
					%	%	
					%	%	
					%	%	
					%	%	
					%	%	
					%	%	

1.One Story Fram
2.Two Story Fram
3.Three Story Fr
4.1 & 1/2 Story
5.1 & 3/4 Story
6.2 & 1/2 Story
21.Open Frame Por
22.Encl Frame Por
23.Frame Garage
24.Frame Shed
25.Frame Bay Wind
26.1SFr Overhang
27.Unfin Basement
28.Unfinished Att
29.Finished Attic

Map Lot 223-016-002 Account 2117 Location 18 EARLES WAY Card 1 Of 1 11/30/2020

DORR, HEIDI
18 EARLES WAY
HANCOCK ME 04640

B5114P85

Property Data

Neighborhood **65 Neighborhood 65**

Tree Growth Year **0**

TREE GROWTH RECERTIFY **0**

STATE SALE CODE **0**

Zone/Land Use **11 Residential**

Secondary Zone

Topography **2 Rolling** **4 Below Street**

1.Level	4.Below St	7.
2.Rolling	5.Low	8.
3.Above St	6.Swampy	9.

Utilities

1.Public	4.Dr Well	7.Cesspool
2.Water	5.Dug Well	8.
3.Sewer	6.Septic	9.None

Street **3 Gravel**

1.Paved	4.Proposed	7.
2.Semi Imp	5.	8.
3.Gravel	6.	9.None

REVIEW STRUCTURE YEAR **0**

RENTAL? 0=NO 1=YES **0**

Sale Data

Sale Date **12/23/2008**

Price **16,000**

Sale Type **1 Land Only**

1.Land	4.Mobile	7.
2.L & B	5.Other	8.
3.Building	6.	9.

Financing **9 Unknown**

1.Convent	4.Seller	7.
2.FHA/VA	5.Private	8.
3.Assumed	6.Cash	9.Unknown

Validity **1 Arms Length Sale**

1.Valid	4.Split	7.Changes
2.Related	5.Partial	8.Other
3.Distress	6.Exempt	9.Fr Ffclse

Verified **5 Public Record**

1.Buyer	4.Agent	7.Family
2.Seller	5.Pub Rec	8.Other
3.Lender	6.MLS	9.

Assessment Record

Year	Land	Buildings	Exempt	Total
2009	25,800	0	0	25,800
2010	38,300	32,900	10,000	61,200
2011	38,300	29,600	10,000	57,900
2012	38,300	27,600	10,000	55,900
2013	38,300	27,600	10,000	55,900
2014	38,300	27,000	10,800	54,500
2015	38,300	27,000	11,000	54,300
2016	38,300	27,000	16,500	48,800
2017	38,300	27,000	22,000	43,300
2018	38,300	27,000	22,000	43,300
2019	38,300	27,000	22,000	43,300
2020	38,300	27,000	25,000	40,300

Land Data

Front Foot	Type	Effective Frontage	Effective Depth	Influence Factor	Influence Code
11.Regular Lot				%	
12.Delta Triangle				%	
13.Nabla Triangle				%	
14.Rear Land				%	
15.Miscellaneous				%	
				%	
				%	
Square Foot		**Square Feet**			
16.Regular Lot				%	
17.Secondary Lot				%	
18.Excess Land				%	
19.Condominium				%	
20.Miscellaneous				%	
				%	
				%	
Fract. Acre		**Acreage/Sites**			
21.Homesite (Frac	21	1.00		100 %	0
22.Baselot (Fract	24	1.02		100 %	0
23.Misc (Fract)	44	1.00		100 %	0
Acres				%	
24.Excess Acres 1				%	
25.Excess Acres 5				%	
26.Excess Acres 2				%	
27.Excess Acres 5				%	
28.Excess Acres 1				%	
29.Excess acres				%	

Total Acreage 2.02

Influence Codes

1.Unimproved
2.Excess Frtg
3.Topography
4.Size/Shape
5.Access
6.Restriction
7.Corner Infl
8.Environment
9.Fract Share
Acres
30.Industrial Sit
31.Working Waterf
32.Cultivated Cro
33.Pasture
34.Softwood (Farm
35.Mixed Wood (Fa
36.Hardwood (Farm
37.Softwood
38.Mixed Wood
39.Hardwood
40.Wasteland
41.Gravel Pit
42.Mobile Home Si
43.Location Base
44.Lot Improvemen
45.Waterfront A
46.Lobster Pound

Inspection Witnessed By:

X Date

No./Date	Description	Date Insp.

Notes:

Hancock

Hancock

Map Lot 223-016-002 | Account 2117 | Location 18 EARLES WAY | Card 1 Of 1 | 11/30/2020

Building Style		
0.Uncoded	4.Cape	8.Log
1.Conv.	5.Garrison	9.Other
2.Ranch	6.Colonial	10.Dutch C
3.R Ranch	7.Contemp	11.Farmhou

Dwelling Units

Other Units

Stories		
1.1	4.1.5	7.3.5
2.2	5.1.75	8.
3.3	6.2.5	9.

Exterior Walls		
0.Uncoded	4.Asbestos	8.Stone
1.Wood	5.Stucco	9.Other
2.Vin/Al	6.Brick Ve	10.Concret
3.Compos.	7.Solid Br	12.

Roof Surface		
1.Asphalt	4.Composit	7.
2.Slate	5.Wood	8.
3.Metal	6.Other	9.

SF Masonry Trim

OPEN-3-CUSTOM

OPEN-4-CUSTOM

Year Built

Year Remodeled

Foundation		
1.Concrete	4.Wood	7.
2.C Block	5.Slab	8.
3.Br/Stone	6.Piers	9.

Basement		
1.1/4 Bmt	4.Full Bmt	7.
2.1/2 Bmt	5.None	8.
3.3/4 Bmt	6.	9.None

Bsmt Gar # Cars

Wet Basement		
1.Dry	4.	7.
2.Damp	5.	8.
3.Wet	6.	9.

SF Bsmt Living

Fin Bsmt Grade

OPEN-5-CUSTOMIZE

Heat Type **100%**		
0.Uncoded	4.Steam	8.Fl/Wall
1.HWBB	5.FWA	9.No Heat
2.HWCI	6.GravWA	10.Radiabt
3.H Pump	7.Electric	12.

Cool Type **100%**		
1.Refrig	4.W&C Air	7.
2.Evapor	5.	8.
3.H Pump	6.	9.None

Kitchen Style		
1.Modern	4.Obsolete	7.
2.Typical	5.	8.
3.Old Type	6.	9.None

Bath(s) Style		
1.Modern	4.Obsolete	7.
2.Typical	5.	8.
3.Old Type	6.	9.None

Rooms

Bedrooms

Full Baths

Half Baths

Addn Fixtures

Fireplaces

TRIO Software
A Division of Harris Computer Systems

Layout		
1.Typical	4.	7.
2.Inadeq	5.	8.
3.Horrid	6.	9.

Attic		
1.1/4 Fin	4.Full Fin	7.
2.1/2 Fin	5.Fl/Stair	8.
3.3/4 Fin	6.	9.None

Insulation		
1.Full	4.Minimal	7.
2.Heavy	5.Partial	8.
3.Capped	6.	9.None

Unfinished %

Grade & Factor		
1.E Grade	4.B Grade	7.AAA Grad
2.D Grade	5.A Grade	8.SC Grade
3.C Grade	6.AA Grade	9.Same

SQFT (Footprint)

Condition		
1.Poor	4.Avg	7.V G
2.Fair	5.Avg+	8.Exc
3.Avg-	6.Good	9.Same

Phys. % Good

Funct. % Good

Functional Code		
1.Incomp	4.Delap	7.Seasonal
2.O-Built	5.Bsmt	8.
3.Fire	6.2014 ADJ	9.None

Econ. % Good

Economic Code		
0.None	3.No Power	7.
1.Location	4.Generate	8.
2.Encroach	9.None	9.

Entrance Code **0**		
1.Interior	4.Vacant	7.
2.Refusal	5.Estimate	8.
3.Informed	6.	9.

Information Code **0**		
1.Owner	4.Agent	7.
2.Relative	5.Estimate	8.
3.Tenant	6.Other	9.

1993 14 x 70 ASTRO NO-C
NTA 300257

4 x 6 WD DK

Date Inspected

Additions, Outbuildings & Improvements

Type	Year	Units	Grade	Cond	Phys.	Funct.	Sound Value
998 14 Mobile Home	1993	14x70	4 100	4	0 %	100 %	
68 Wood Deck	2000	24	3 100	4	0 %	100 %	
					%	%	
					%	%	
					%	%	
					%	%	
					%	%	
					%	%	
					%	%	
					%	%	

1.One Story Fram
2.Two Story Fram
3.Three Story Fr
4.1 & 1/2 Story
5.1 & 3/4 Story
6.2 & 1/2 Story
21.Open Frame Por
22.Encl Frame Por
23.Frame Garage
24.Frame Shed
25.Frame Bay Wind
26.1SFr Overhang
27.Unfin Basement
28.Unfinished Att
29.Finished Attic

Map Lot 223-016-003 Account 246 Location 21 EARLES WAY Card 1 Of 1 11/30/2020

PELLETIER, SCOTT (J/T)
BRIDGES, RACHAEL (J/T)
21 EARLES WAY
HANCOCK ME 04640

B4247P111 B5220P262

Previous Owner
CLOUGH, JAYSON
P O BOX 133

SEAL COVE ME 04674
Sale Date: 7/31/2013

Previous Owner
CLOUGH, PAUL & HELEN, ESTATE OF
10 EARLES WAY

HANCOCK ME 04640
Sale Date: 6/03/2009

Previous Owner
CLOUGH, HELEN M.
7 STRAWBERRY HILL

BAR HARBOR ME 04609
Sale Date: 7/18/2005

Inspection Witnessed By:

X Date

No./Date	Description	Date Insp.

Notes:

Property Data

Neighborhood **65 Neighborhood 65**

Tree Growth Year **0**

TREE GROWTH RECERTIFY **0**

STATE SALE CODE **0**

Zone/Land Use **11 Residential**

Secondary Zone

Topography **9** **9**

1.Level 4.Below St 7.
2.Rolling 5.Low 8.
3.Above St 6.Swampy 9.

Utilities **9 None** **9 None**

1.Public 4.Dr Well 7.Cesspool
2.Water 5.Dug Well 8.
3.Sewer 6.Septic 9.None

Street **9 None**

1.Paved 4.Proposed 7.
2.Semi Imp 5. 8.
3.Gravel 6. 9.None

REVIEW STRUCTURE YEAR **0**

RENTAL? 0=NO 1=YES **0**

Sale Data

Sale Date **7/31/2013**

Price **142,300**

Sale Type **2 Land & Buildings**

1.Land 4.Mobile 7.
2.L & B 5.Other 8.
3.Building 6. 9.

Financing **9 Unknown**

1.Convent 4.Seller 7.
2.FHA/VA 5.Private 8.
3.Assumed 6.Cash 9.Unknown

Validity **1 Arms Length Sale**

1.Valid 4.Split 7.Changes
2.Related 5.Partial 8.Other
3.Distress 6.Exempt 9.Fr Ffclse

Verified **5 Public Record**

1.Buyer 4.Agent 7.Family
2.Seller 5.Pub Rec 8.Other
3.Lender 6.MLS 9.

Assessment Record

Year	Land	Buildings	Exempt	Total
2007	58,200	0	0	58,200
2008	61,800	0	0	61,800
2009	61,800	0	0	61,800
2010	61,800	176,000	0	237,800
2011	61,800	176,000	0	237,800
2012	61,800	176,000	0	237,800
2013	61,800	176,000	0	237,800
2014	39,000	167,200	0	206,200
2015	39,000	167,200	0	206,200
2016	39,000	167,200	0	206,200
2017	39,000	167,200	0	206,200
2018	39,000	167,200	0	206,200
2019	39,000	167,200	0	206,200
2020	39,000	167,200	0	206,200

Land Data

Front Foot	Type	Effective Frontage	Effective Depth	Influence Factor	Influence Code
11.Regular Lot				%	
12.Delta Triangle				%	
13.Nabla Triangle				%	
14.Rear Land				%	
15.Miscellaneous				%	
				%	
				%	
Square Foot		**Square Feet**			
16.Regular Lot				%	
17.Secondary Lot				%	
18.Excess Land				%	
19.Condominium				%	
20.Miscellaneous				%	
				%	
				%	
Fract. Acre		**Acreage/Sites**			
21.Homesite (Frac	21	1.00	100	%	0
22.Baselot (Fract	24	2.00	100	%	0
23.Misc (Fract)	44	1.00	100	%	0
Acres				%	
24.Excess Acres 1				%	
25.Excess Acres 5				%	
26.Excess Acres 2				%	
27.Excess Acres 5				%	
28.Excess Acres 1				%	
29.Excess acres				%	

Total Acreage 3.00

Influence Codes

1.Unimproved
2.Excess Frtg
3.Topography
4.Size/Shape
5.Access
6.Restriction
7.Corner Infl
8.Environment
9.Fract Share
Acres
30.Industrial Sit
31.Working Waterf
32.Cultivated Cro
33.Pasture
34.Softwood (Farm
35.Mixed Wood (Fa
36.Hardwood (Farm
37.Softwood
38.Mixed Wood
39.Hardwood
40.Wasteland
41.Gravel Pit
42.Mobile Home Si
43.Location Base
44.Lot Improvemen
45.Waterfront A
46.Lobster Pound

Hancock

Hancock

Map Lot 223-016-003 | Account 246 | Location 21 EARLES WAY | Card 1 Of 1 | 11/30/2020

Building Style **4 Cape**		
0.Uncoded	4.Cape	8.Log
1.Conv.	5.Garrison	9.Other
2.Ranch	6.Colonial	10.Dutch C
3.R Ranch	7.Contemp	11.Farmhou
Dwelling Units **1**		
Other Units **0**		
Stories **4 One & 1/2 Story**		
1.1	4.1.5	7.3.5
2.2	5.1.75	8.
3.3	6.2.5	9.
Exterior Walls **1 Wood Siding**		
0.Uncoded	4.Asbestos	8.Stone
1.Wood	5.Stucco	9.Other
2.Vin/Al	6.Brick Ve	10.Concret
3.Compos.	7.Solid Br	12.
Roof Surface **1 Asphalt Shingles**		
1.Asphalt	4.Composit	7.
2.Slate	5.Wood	8.
3.Metal	6.Other	9.
SF Masonry Trim **0**		
OPEN-3-CUSTOM **0**		
OPEN-4-CUSTOM **0**		
Year Built **2008**		
Year Remodeled **0**		
Foundation **4 Wood**		
1.Concrete	4.Wood	7.
2.C Block	5.Slab	8.
3.Br/Stone	6.Piers	9.
Basement **1 1/4 Basement**		
1.1/4 Bmt	4.Full Bmt	7.
2.1/2 Bmt	5.None	8.
3.3/4 Bmt	6.	9.None
Bsmt Gar # Cars **0**		
Wet Basement **1 Dry Basement**		
1.Dry	4.	7.
2.Damp	5.	8.
3.Wet	6.	9.

SF Bsmt Living **0**		
Fin Bsmt Grade **0 0**		
OPEN-5-CUSTOMIZE **0**		
Heat Type **100%** **1 Hot Water BB**		
0.Uncoded	4.Steam	8.Fl/Wall
1.HWBB	5.FWA	9.No Heat
2.HWCI	6.GravWA	10.Radiabt
3.H Pump	7.Electric	12.
Cool Type **100%** **9 None**		
1.Refrig	4.W&C Air	7.
2.Evapor	5.	8.
3.H Pump	6.	9.None
Kitchen Style **2 Typical**		
1.Modern	4.Obsolete	7.
2.Typical	5.	8.
3.Old Type	6.	9.None
Bath(s) Style **2 Typical Bath(s)**		
1.Modern	4.Obsolete	7.
2.Typical	5.	8.
3.Old Type	6.	9.None
# Rooms **6**		
# Bedrooms **3**		
# Full Baths **1**		
# Half Baths **0**		
# Addn Fixtures **0**		
# Fireplaces **0**		

TRIO Software
A Division of Harris Computer Systems

Layout **1 Typical**		
1.Typical	4.	7.
2.Inadeq	5.	8.
3.Horrid	6.	9.
Attic **9 None**		
1.1/4 Fin	4.Full Fin	7.
2.1/2 Fin	5.Fl/Stair	8.
3.3/4 Fin	6.	9.None
Insulation **1 Full**		
1.Full	4.Minimal	7.
2.Heavy	5.Partial	8.
3.Capped	6.	9.None
Unfinished % **0%**		
Grade & Factor **3 Average 100%**		
1.E Grade	4.B Grade	7.AAA Grad
2.D Grade	5.A Grade	8.SC Grade
3.C Grade	6.AA Grade	9.Same
SQFT (Footprint) **1440**		
Condition **4 Average**		
1.Poor	4.Avg	7.V G
2.Fair	5.Avg+	8.Exc
3.Avg-	6.Good	9.Same
Phys. % Good **0%**		
Funct. % Good **95%**		
Functional Code **6 2014 ADJUSTMENT**		
1.Incomp	4.Delap	7.Seasonal
2.O-Built	5.Bsmt	8.
3.Fire	6.2014 ADJ	9.None
Econ. % Good **100%**		
Economic Code **None**		
0.None	3.No Power	7.
1.Location	4.Generate	8.
2.Encroach	9.None	9.
Entrance Code **0**		
1.Interior	4.Vacant	7.
2.Refusal	5.Estimate	8.
3.Informed	6.	9.
Information Code **0**		
1.Owner	4.Agent	7.
2.Relative	5.Estimate	8.
3.Tenant	6.Other	9.

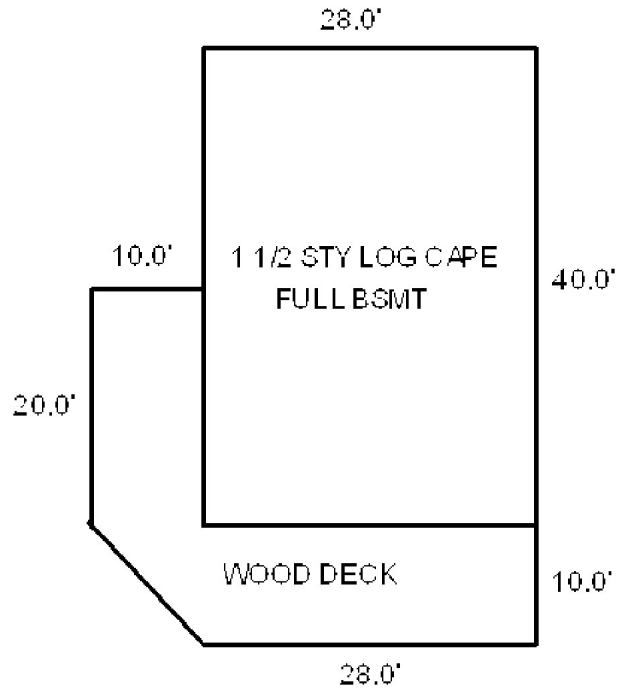

Date Inspected

Additions, Outbuildings & Improvements

Type	Year	Units	Grade	Cond	Phys.	Funct.	Sound Value
68 Wood Deck	2008	530	0 0	0	0 %	0 %	
					%	%	
					%	%	
					%	%	
					%	%	
					%	%	
					%	%	
					%	%	
					%	%	
					%	%	

1.One Story Fram
2.Two Story Fram
3.Three Story Fr
4.1 & 1/2 Story
5.1 & 3/4 Story
6.2 & 1/2 Story
21.Open Frame Por
22.Encl Frame Por
23.Frame Garage
24.Frame Shed
25.Frame Bay Wind
26.1SFr Overhang
27.Unfin Basement
28.Unfinished Att
29.Finished Attic

Map Lot 223-016-004 Account 2214 Location POPLAR LANE Card 1 Of 1 11/30/2020

SINCLAIR, SR., LAWRENCE R
PO BOX 385
ELLSWORTH ME 04605

B6587P248 B6842P127

Property Data

Neighborhood **66 Neighborhood 66**

Tree Growth Year **0**

TREE GROWTH RECERTIFY **0**

STATE SALE CODE **0**

Zone/Land Use **11 Residential**

Secondary Zone

Topography **2 Rolling**

1.Level	4.Below St	7.
2.Rolling	5.Low	8.
3.Above St	6.Swampy	9.

Utilities

1.Public	4.Dr Well	7.Cesspool
2.Water	5.Dug Well	8.
3.Sewer	6.Septic	9.None

Street **3 Gravel**

1.Paved	4.Proposed	7.
2.Semi Imp	5.	8.
3.Gravel	6.	9.None

REVIEW STRUCTURE YEAR **0**

RENTAL? 0=NO 1=YES **0**

Sale Data

Sale Date

Price

Sale Type

1.Land	4.Mobile	7.
2.L & B	5.Other	8.
3.Building	6.	9.

Financing

1.Convent	4.Seller	7.
2.FHA/VA	5.Private	8.
3.Assumed	6.Cash	9.Unknown

Validity

1.Valid	4.Split	7.Changes
2.Related	5.Partial	8.Other
3.Distress	6.Exempt	9.Fr Ffclse

Verified

1.Buyer	4.Agent	7.Family
2.Seller	5.Pub Rec	8.Other
3.Lender	6.MLS	9.

Assessment Record

Year	Land	Buildings	Exempt	Total
2018	59,800	0	0	59,800
2019	59,800	0	0	59,800
2020	59,800	0	0	59,800

Land Data

Front Foot	Type	Effective Frontage	Effective Depth	Influence Factor	Influence Code
11.Regular Lot				%	
12.Delta Triangle				%	
13.Nabla Triangle				%	
14.Rear Land				%	
15.Miscellaneous				%	
				%	
				%	

Square Foot	Square Feet		
16.Regular Lot		%	
17.Secondary Lot		%	
18.Excess Land		%	
19.Condominium		%	
20.Miscellaneous		%	
		%	
		%	

Fract. Acre	Acreage/Sites			
21.Homesite (Frac	21	1.00	100 %	0
22.Baselot (Fract	24	4.00	100 %	0
23.Misc (Fract)	25	0.76	100 %	0
Acres			%	
24.Excess Acres 1			%	
25.Excess Acres 5			%	
26.Excess Acres 2			%	
27.Excess Acres 5			%	
28.Excess Acres 1				
29.Excess acres				

Total Acreage 5.76

Influence Codes

1.Unimproved
2.Excess Frtg
3.Topography
4.Size/Shape
5.Access
6.Restriction
7.Corner Infl
8.Environment
9.Fract Share
Acres
30.Industrial Sit
31.Working Waterf
32.Cultivated Cro
33.Pasture
34.Softwood (Farm
35.Mixed Wood (Fa
36.Hardwood (Farm
37.Softwood
38.Mixed Wood
39.Hardwood
40.Wasteland
41.Gravel Pit
42.Mobile Home Si
43.Location Base
44.Lot Improvemen
45.Waterfront A
46.Lobster Pound

Inspection Witnessed By:

X Date

No./Date	Description	Date Insp.

Notes:

Hancock

Hancock

Map Lot 223-016-004 | Account 2214 | Location POPLAR LANE | Card 1 Of 1 | 11/30/2020

Building Style		
0.Uncoded	4.Cape	8.Log
1.Conv.	5.Garrison	9.Other
2.Ranch	6.Colonial	10.Dutch C
3.R Ranch	7.Contemp	11.Farmhou

Dwelling Units
Other Units

Stories		
1.1	4.1.5	7.3.5
2.2	5.1.75	8.
3.3	6.2.5	9.

Exterior Walls		
0.Uncoded	4.Asbestos	8.Stone
1.Wood	5.Stucco	9.Other
2.Vin/Al	6.Brick Ve	10.Concret
3.Compos.	7.Solid Br	12.

Roof Surface		
1.Asphalt	4.Composit	7.
2.Slate	5.Wood	8.
3.Metal	6.Other	9.

SF Masonry Trim
OPEN-3-CUSTOM
OPEN-4-CUSTOM
Year Built
Year Remodeled

Foundation		
1.Concrete	4.Wood	7.
2.C Block	5.Slab	8.
3.Br/Stone	6.Piers	9.

Basement		
1.1/4 Bmt	4.Full Bmt	7.
2.1/2 Bmt	5.None	8.
3.3/4 Bmt	6.	9.None

Bsmt Gar # Cars

Wet Basement		
1.Dry	4.	7.
2.Damp	5.	8.
3.Wet	6.	9.

SF Bsmt Living
Fin Bsmt Grade
OPEN-5-CUSTOMIZE

Heat Type **100%**		
0.Uncoded	4.Steam	8.Fl/Wall
1.HWBB	5.FWA	9.No Heat
2.HWCI	6.GravWA	10.Radiabt
3.H Pump	7.Electric	12.

Cool Type **100%**		
1.Refrig	4.W&C Air	7.
2.Evapor	5.	8.
3.H Pump	6.	9.None

Kitchen Style		
1.Modern	4.Obsolete	7.
2.Typical	5.	8.
3.Old Type	6.	9.None

Bath(s) Style		
1.Modern	4.Obsolete	7.
2.Typical	5.	8.
3.Old Type	6.	9.None

Rooms
Bedrooms
Full Baths
Half Baths
Addn Fixtures
Fireplaces

TRIO Software
A Division of Harris Computer Systems

Layout		
1.Typical	4.	7.
2.Inadeq	5.	8.
3.Horrid	6.	9.

Attic		
1.1/4 Fin	4.Full Fin	7.
2.1/2 Fin	5.Fl/Stair	8.
3.3/4 Fin	6.	9.None

Insulation		
1.Full	4.Minimal	7.
2.Heavy	5.Partial	8.
3.Capped	6.	9.None

Unfinished %

Grade & Factor		
1.E Grade	4.B Grade	7.AAA Grad
2.D Grade	5.A Grade	8.SC Grade
3.C Grade	6.AA Grade	9.Same

SQFT (Footprint)

Condition		
1.Poor	4.Avg	7.V G
2.Fair	5.Avg+	8.Exc
3.Avg-	6.Good	9.Same

Phys. % Good
Funct. % Good

Functional Code		
1.Incomp	4.Delap	7.Seasonal
2.O-Built	5.Bsmt	8.
3.Fire	6.2014 ADJ	9.None

Econ. % Good

Economic Code		
0.None	3.No Power	7.
1.Location	4.Generate	8.
2.Encroach	9.None	9.

Entrance Code **0**		
1.Interior	4.Vacant	7.
2.Refusal	5.Estimate	8.
3.Informed	6.	9.

Information Code **0**		
1.Owner	4.Agent	7.
2.Relative	5.Estimate	8.
3.Tenant	6.Other	9.

Date Inspected

Additions, Outbuildings & Improvements

Type	Year	Units	Grade	Cond	Phys.	Funct.	Sound Value
					%	%	
					%	%	
					%	%	
					%	%	
					%	%	
					%	%	
					%	%	
					%	%	
					%	%	
					%	%	

1.One Story Fram
2.Two Story Fram
3.Three Story Fr
4.1 & 1/2 Story
5.1 & 3/4 Story
6.2 & 1/2 Story
21.Open Frame Por
22.Encl Frame Por
23.Frame Garage
24.Frame Shed
25.Frame Bay Wind
26.1SFr Overhang
27.Unfin Basement
28.Unfinished Att
29.Finished Attic

Map Lot 223-016-005 Account 2228 Location POPLAR LANE Card 1 Of 1 11/30/2020

CLOUGH, CAMERON
PO BOX 396
SOUTHWEST HARBOR ME 04679

B6871P115

Previous Owner
CLOUGH, JAYSON
PO BOX 133

SEAL COVE ME 04674
Sale Date: 1/22/2018

Inspection Witnessed By:

X Date

No./Date	Description	Date Insp.

Notes:

Hancock

Property Data

Neighborhood	**30 Neighborhood 30**
Tree Growth Year	**0**
TREE GROWTH RECERTIFY	**0**
STATE SALE CODE	**0**
Zone/Land Use	**11 Residential**
Secondary Zone	

Topography

1.Level	4.Below St	7.
2.Rolling	5.Low	8.
3.Above St	6.Swampy	9.

Utilities

1.Public	4.Dr Well	7.Cesspool
2.Water	5.Dug Well	8.
3.Sewer	6.Septic	9.None

Street

1.Paved	4.Proposed	7.
2.Semi Imp	5.	8.
3.Gravel	6.	9.None

REVIEW STRUCTURE YEAR	**0**
RENTAL? 0=NO 1=YES	**0**

Sale Data

Sale Date	**1/22/2018**
Price	**5,584**
Sale Type	**1 Land Only**

1.Land	4.Mobile	7.
2.L & B	5.Other	8.
3.Building	6.	9.

Financing	**9 Unknown**

1.Convent	4.Seller	7.
2.FHA/VA	5.Private	8.
3.Assumed	6.Cash	9.Unknown

Validity	**2 Related Parties**

1.Valid	4.Split	7.Changes
2.Related	5.Partial	8.Other
3.Distress	6.Exempt	9.Fr Ffclse

Verified	**5 Public Record**

1.Buyer	4.Agent	7.Family
2.Seller	5.Pub Rec	8.Other
3.Lender	6.MLS	9.

Assessment Record

Year	Land	Buildings	Exempt	Total
2018	27,300	0	0	27,300
2019	27,300	0	0	27,300
2020	27,300	0	0	27,300

Land Data

Front Foot	Type	Effective Frontage	Effective Depth	Influence Factor	Influence Code
11.Regular Lot				%	
12.Delta Triangle				%	
13.Nabla Triangle				%	
14.Rear Land				%	
15.Miscellaneous				%	
				%	
				%	

Square Foot		Square Feet		
16.Regular Lot			%	
17.Secondary Lot			%	
18.Excess Land			%	
19.Condominium			%	
20.Miscellaneous			%	
			%	
			%	

Fract. Acre		Acreage/Sites		
21.Homesite (Frac	21	1.00	100 %	0
22.Baselot (Fract	24	3.08	100 %	0
23.Misc (Fract)			%	
Acres			%	
24.Excess Acres 1			%	
25.Excess Acres 5			%	
26.Excess Acres 2			%	
27.Excess Acres 5			%	
28.Excess Acres 1			%	
29.Excess acres			%	

Total Acreage 4.08

Influence Codes

1.Unimproved
2.Excess Frtg
3.Topography
4.Size/Shape
5.Access
6.Restriction
7.Corner Infl
8.Environment
9.Fract Share
Acres
30.Industrial Sit
31.Working Waterf
32.Cultivated Cro
33.Pasture
34.Softwood (Farm
35.Mixed Wood (Fa
36.Hardwood (Farm
37.Softwood
38.Mixed Wood
39.Hardwood
40.Wasteland
41.Gravel Pit
42.Mobile Home Si
43.Location Base
44.Lot Improvemen
45.Waterfront A
46.Lobster Pound

Hancock

Map Lot 223-016-005 | Account 2228 | Location POPLAR LANE | Card 1 Of 1 | 11/30/2020

Building Style		
0.Uncoded	4.Cape	8.Log
1.Conv.	5.Garrison	9.Other
2.Ranch	6.Colonial	10.Dutch C
3.R Ranch	7.Contemp	11.Farmhou

Dwelling Units
Other Units

Stories		
1.1	4.1.5	7.3.5
2.2	5.1.75	8.
3.3	6.2.5	9.

Exterior Walls		
0.Uncoded	4.Asbestos	8.Stone
1.Wood	5.Stucco	9.Other
2.Vin/Al	6.Brick Ve	10.Concret
3.Compos.	7.Solid Br	12.

Roof Surface		
1.Asphalt	4.Composit	7.
2.Slate	5.Wood	8.
3.Metal	6.Other	9.

SF Masonry Trim
OPEN-3-CUSTOM
OPEN-4-CUSTOM
Year Built
Year Remodeled

Foundation		
1.Concrete	4.Wood	7.
2.C Block	5.Slab	8.
3.Br/Stone	6.Piers	9.

Basement		
1.1/4 Bmt	4.Full Bmt	7.
2.1/2 Bmt	5.None	8.
3.3/4 Bmt	6.	9.None

Bsmt Gar # Cars

Wet Basement		
1.Dry	4.	7.
2.Damp	5.	8.
3.Wet	6.	9.

SF Bsmt Living
Fin Bsmt Grade
OPEN-5-CUSTOMIZE

Heat Type **100%**		
0.Uncoded	4.Steam	8.Fl/Wall
1.HWBB	5.FWA	9.No Heat
2.HWCI	6.GravWA	10.Radiabt
3.H Pump	7.Electric	12.

Cool Type **100%**		
1.Refrig	4.W&C Air	7.
2.Evapor	5.	8.
3.H Pump	6.	9.None

Kitchen Style		
1.Modern	4.Obsolete	7.
2.Typical	5.	8.
3.Old Type	6.	9.None

Bath(s) Style		
1.Modern	4.Obsolete	7.
2.Typical	5.	8.
3.Old Type	6.	9.None

Rooms
Bedrooms
Full Baths
Half Baths
Addn Fixtures
Fireplaces

TRIO Software
A Division of Harris Computer Systems

Layout		
1.Typical	4.	7.
2.Inadeq	5.	8.
3.Horrid	6.	9.

Attic		
1.1/4 Fin	4.Full Fin	7.
2.1/2 Fin	5.Fl/Stair	8.
3.3/4 Fin	6.	9.None

Insulation		
1.Full	4.Minimal	7.
2.Heavy	5.Partial	8.
3.Capped	6.	9.None

Unfinished %

Grade & Factor		
1.E Grade	4.B Grade	7.AAA Grad
2.D Grade	5.A Grade	8.SC Grade
3.C Grade	6.AA Grade	9.Same

SQFT (Footprint)

Condition		
1.Poor	4.Avg	7.V G
2.Fair	5.Avg+	8.Exc
3.Avg-	6.Good	9.Same

Phys. % Good
Funct. % Good

Functional Code		
1.Incomp	4.Delap	7.Seasonal
2.O-Built	5.Bsmt	8.
3.Fire	6.2014 ADJ	9.None

Econ. % Good

Economic Code		
0.None	3.No Power	7.
1.Location	4.Generate	8.
2.Encroach	9.None	9.

Entrance Code **0**		
1.Interior	4.Vacant	7.
2.Refusal	5.Estimate	8.
3.Informed	6.	9.

Information Code **0**		
1.Owner	4.Agent	7.
2.Relative	5.Estimate	8.
3.Tenant	6.Other	9.

Date Inspected

Additions, Outbuildings & Improvements

Type	Year	Units	Grade	Cond	Phys.	Funct.	Sound Value
					%	%	
					%	%	
					%	%	
					%	%	
					%	%	
					%	%	
					%	%	
					%	%	
					%	%	
					%	%	

1.One Story Fram
2.Two Story Fram
3.Three Story Fr
4.1 & 1/2 Story
5.1 & 3/4 Story
6.2 & 1/2 Story
21.Open Frame Por
22.Encl Frame Por
23.Frame Garage
24.Frame Shed
25.Frame Bay Wind
26.1SFr Overhang
27.Unfin Basement
28.Unfinished Att
29.Finished Attic

Map Lot 223-016-006 Account 2246 Location POPLAR LANE EXT Card 1 Of 1 11/30/2020

GOTT, TIMOTHY H
110 BASS HARBOR RD
SOUTHWEST HARBOR ME 04679

B6902P711

Property Data

Neighborhood **65 Neighborhood 65**

Tree Growth Year **0**

TREE GROWTH RECERTIFY

STATE SALE CODE

Zone/Land Use **11 Residential**

Secondary Zone

Topography

1.Level	4.Below St	7.
2.Rolling	5.Low	8.
3.Above St	6.Swampy	9.

Utilities

1.Public	4.Dr Well	7.Cesspool
2.Water	5.Dug Well	8.
3.Sewer	6.Septic	9.None

Street

1.Paved	4.Proposed	7.
2.Semi Imp	5.	8.
3.Gravel	6.	9.None

REVIEW STRUCTURE YEAR **0**

RENTAL? 0=NO 1=YES **0**

Sale Data

Sale Date

Price

Sale Type

1.Land	4.Mobile	7.
2.L & B	5.Other	8.
3.Building	6.	9.

Financing

1.Convent	4.Seller	7.
2.FHA/VA	5.Private	8.
3.Assumed	6.Cash	9.Unknown

Validity

1.Valid	4.Split	7.Changes
2.Related	5.Partial	8.Other
3.Distress	6.Exempt	9.Fr Ffclse

Verified

1.Buyer	4.Agent	7.Family
2.Seller	5.Pub Rec	8.Other
3.Lender	6.MLS	9.

Assessment Record

Year	Land	Buildings	Exempt	Total
2020	25,800	0	0	25,800

Land Data

Front Foot	Type	Effective Frontage	Effective Depth	Influence Factor	Influence Code
11.Regular Lot				%	
12.Delta Triangle				%	
13.Nabla Triangle				%	
14.Rear Land				%	
15.Miscellaneous				%	
				%	
				%	

Square Foot		Square Feet		
16.Regular Lot			%	
17.Secondary Lot			%	
18.Excess Land			%	
19.Condominium			%	
20.Miscellaneous			%	
			%	
			%	

Fract. Acre	Acreage/Sites			
21.Homesite (Frac	21	1.00	100 %	0
22.Baselot (Fract	24	1.10	100 %	0
23.Misc (Fract)			%	
Acres			%	
24.Excess Acres 1			%	
25.Excess Acres 5			%	
26.Excess Acres 2			%	
27.Excess Acres 5			%	
28.Excess Acres 1			%	
29.Excess acres			%	

Total Acreage 2.10

Influence Codes

1.Unimproved
2.Excess Frtg
3.Topography
4.Size/Shape
5.Access
6.Restriction
7.Corner Infl
8.Environment
9.Fract Share
Acres
30.Industrial Sit
31.Working Waterf
32.Cultivated Cro
33.Pasture
34.Softwood (Farm
35.Mixed Wood (Fa
36.Hardwood (Farm
37.Softwood
38.Mixed Wood
39.Hardwood
40.Wasteland
41.Gravel Pit
42.Mobile Home Si
43.Location Base
44.Lot Improvemen
45.Waterfront A
46.Lobster Pound

Inspection Witnessed By:

X Date

No./Date	Description	Date Insp.

Notes:

Hancock

Hancock

Map Lot 223-016-006 | Account 2246 | Location POPLAR LANE EXT | Card 1 Of 1 | 11/30/2020

Building Style		
0.Uncoded	4.Cape	8.Log
1.Conv.	5.Garrison	9.Other
2.Ranch	6.Colonial	10.Dutch C
3.R Ranch	7.Contemp	11.Farmhou

Dwelling Units

Other Units

Stories		
1.1	4.1.5	7.3.5
2.2	5.1.75	8.
3.3	6.2.5	9.

Exterior Walls		
0.Uncoded	4.Asbestos	8.Stone
1.Wood	5.Stucco	9.Other
2.Vin/Al	6.Brick Ve	10.Concret
3.Compos.	7.Solid Br	12.

Roof Surface		
1.Asphalt	4.Composit	7.
2.Slate	5.Wood	8.
3.Metal	6.Other	9.

SF Masonry Trim

OPEN-3-CUSTOM

OPEN-4-CUSTOM

Year Built

Year Remodeled

Foundation		
1.Concrete	4.Wood	7.
2.C Block	5.Slab	8.
3.Br/Stone	6.Piers	9.

Basement		
1.1/4 Bmt	4.Full Bmt	7.
2.1/2 Bmt	5.None	8.
3.3/4 Bmt	6.	9.None

Bsmt Gar # Cars

Wet Basement		
1.Dry	4.	7.
2.Damp	5.	8.
3.Wet	6.	9.

SF Bsmt Living

Fin Bsmt Grade

OPEN-5-CUSTOMIZE

Heat Type **100%**		
0.Uncoded	4.Steam	8.Fl/Wall
1.HWBB	5.FWA	9.No Heat
2.HWCI	6.GravWA	10.Radiabt
3.H Pump	7.Electric	12.

Cool Type **100%**		
1.Refrig	4.W&C Air	7.
2.Evapor	5.	8.
3.H Pump	6.	9.None

Kitchen Style		
1.Modern	4.Obsolete	7.
2.Typical	5.	8.
3.Old Type	6.	9.None

Bath(s) Style		
1.Modern	4.Obsolete	7.
2.Typical	5.	8.
3.Old Type	6.	9.None

Rooms

Bedrooms

Full Baths

Half Baths

Addn Fixtures

Fireplaces

TRIO Software
A Division of Harris Computer Systems

Layout		
1.Typical	4.	7.
2.Inadeq	5.	8.
3.Horrid	6.	9.

Attic		
1.1/4 Fin	4.Full Fin	7.
2.1/2 Fin	5.Fl/Stair	8.
3.3/4 Fin	6.	9.None

Insulation		
1.Full	4.Minimal	7.
2.Heavy	5.Partial	8.
3.Capped	6.	9.None

Unfinished %

Grade & Factor		
1.E Grade	4.B Grade	7.AAA Grad
2.D Grade	5.A Grade	8.SC Grade
3.C Grade	6.AA Grade	9.Same

SQFT (Footprint)

Condition		
1.Poor	4.Avg	7.V G
2.Fair	5.Avg+	8.Exc
3.Avg-	6.Good	9.Same

Phys. % Good

Funct. % Good

Functional Code		
1.Incomp	4.Delap	7.Seasonal
2.O-Built	5.Bsmt	8.
3.Fire	6.2014 ADJ	9.None

Econ. % Good

Economic Code		
0.None	3.No Power	7.
1.Location	4.Generate	8.
2.Encroach	9.None	9.

Entrance Code **0**		
1.Interior	4.Vacant	7.
2.Refusal	5.Estimate	8.
3.Informed	6.	9.

Information Code **0**		
1.Owner	4.Agent	7.
2.Relative	5.Estimate	8.
3.Tenant	6.Other	9.

Date Inspected

Additions, Outbuildings & Improvements

Type	Year	Units	Grade	Cond	Phys.	Funct.	Sound Value
					%	%	
					%	%	
					%	%	
					%	%	
					%	%	
					%	%	
					%	%	
					%	%	
					%	%	
					%	%	

1.One Story Fram
2.Two Story Fram
3.Three Story Fr
4.1 & 1/2 Story
5.1 & 3/4 Story
6.2 & 1/2 Story
21.Open Frame Por
22.Encl Frame Por
23.Frame Garage
24.Frame Shed
25.Frame Bay Wind
26.1SFr Overhang
27.Unfin Basement
28.Unfinished Att
29.Finished Attic

Map Lot 223-018 Account 1911 Location POPLAR LANE Card 1 Of 1 11/30/2020

STANLEY, MATTHEW
STANLEY, NORA
18 PATTEN WAY
ELLSWORTH ME 04605

B3420P135 B4749P70 B5012P95

Previous Owner
RAYBOURN, LARRY D., & DEBRA L.
P O BOX 542

ELLSWORTH ME 04605
Sale Date: 6/13/2008

Previous Owner
SINCLAIR, LAWRENCE R.
P O BOX 385

ELLSWORTH ME 04605
Sale Date: 4/30/2007

Inspection Witnessed By:

X Date

No./Date	Description	Date Insp.

Notes:

Hancock

Property Data

Neighborhood **66 Neighborhood 66**

Tree Growth Year **0**

TREE GROWTH RECERTIFY **0**

STATE SALE CODE **0**

Zone/Land Use **11 Residential**

Secondary Zone

Topography

1.Level 4.Below St 7.
2.Rolling 5.Low 8.
3.Above St 6.Swampy 9.

Utilities

1.Public 4.Dr Well 7.Cesspool
2.Water 5.Dug Well 8.
3.Sewer 6.Septic 9.None

Street **1 Paved**

1.Paved 4.Proposed 7.
2.Semi Imp 5. 8.
3.Gravel 6. 9.None

REVIEW STRUCTURE YEAR **0**

RENTAL? 0=NO 1=YES **0**

Sale Data

Sale Date **6/13/2008**

Price **35,000**

Sale Type **1 Land Only**

1.Land 4.Mobile 7.
2.L & B 5.Other 8.
3.Building 6. 9.

Financing **9 Unknown**

1.Convent 4.Seller 7.
2.FHA/VA 5.Private 8.
3.Assumed 6.Cash 9.Unknown

Validity **1 Arms Length Sale**

1.Valid 4.Split 7.Changes
2.Related 5.Partial 8.Other
3.Distress 6.Exempt 9.Fr Ffclse

Verified **5 Public Record**

1.Buyer 4.Agent 7.Family
2.Seller 5.Pub Rec 8.Other
3.Lender 6.MLS 9.

Assessment Record

Year	Land	Buildings	Exempt	Total
2007	37,000	0	0	37,000
2008	37,000	0	0	37,000
2009	37,000	0	0	37,000
2010	37,000	0	0	37,000
2011	37,000	0	0	37,000
2012	37,000	0	0	37,000
2013	37,000	0	0	37,000
2014	37,000	0	0	37,000
2015	37,000	0	0	37,000
2016	37,000	0	0	37,000
2017	37,000	0	0	37,000
2018	37,000	0	0	37,000
2019	37,000	0	0	37,000
2020	37,000	0	0	37,000

Land Data

Front Foot	Type	Effective Frontage	Effective Depth	Influence Factor	Influence Code
11.Regular Lot				%	
12.Delta Triangle				%	
13.Nabla Triangle				%	
14.Rear Land				%	
15.Miscellaneous				%	
				%	
				%	
Square Foot		**Square Feet**			
16.Regular Lot				%	
17.Secondary Lot				%	
18.Excess Land				%	
19.Condominium				%	
20.Miscellaneous				%	
				%	
				%	
Fract. Acre		**Acreage/Sites**			
21.Homesite (Frac	21	1.00		70 %	0
22.Baselot (Fract	24	1.95		70 %	0
23.Misc (Fract)				%	
Acres				%	
24.Excess Acres 1				%	
25.Excess Acres 5				%	
26.Excess Acres 2				%	
27.Excess Acres 5				%	
28.Excess Acres 1				%	
29.Excess acres				%	

Total Acreage 2.95

Influence Codes

1.Unimproved
2.Excess Frtg
3.Topography
4.Size/Shape
5.Access
6.Restriction
7.Corner Infl
8.Environment
9.Fract Share
Acres
30.Industrial Sit
31.Working Waterf
32.Cultivated Cro
33.Pasture
34.Softwood (Farm
35.Mixed Wood (Fa
36.Hardwood (Farm
37.Softwood
38.Mixed Wood
39.Hardwood
40.Wasteland
41.Gravel Pit
42.Mobile Home Si
43.Location Base
44.Lot Improvemen
45.Waterfront A
46.Lobster Pound

Hancock

Map Lot 223-018 | Account 1911 | Location POPLAR LANE | Card 1 Of 1 | 11/30/2020

Building Style		
0.Uncoded	4.Cape	8.Log
1.Conv.	5.Garrison	9.Other
2.Ranch	6.Colonial	10.Dutch C
3.R Ranch	7.Contemp	11.Farmhou

Dwelling Units
Other Units

Stories		
1.1	4.1.5	7.3.5
2.2	5.1.75	8.
3.3	6.2.5	9.

Exterior Walls		
0.Uncoded	4.Asbestos	8.Stone
1.Wood	5.Stucco	9.Other
2.Vin/Al	6.Brick Ve	10.Concret
3.Compos.	7.Solid Br	12.

Roof Surface		
1.Asphalt	4.Composit	7.
2.Slate	5.Wood	8.
3.Metal	6.Other	9.

SF Masonry Trim
OPEN-3-CUSTOM
OPEN-4-CUSTOM
Year Built
Year Remodeled

Foundation		
1.Concrete	4.Wood	7.
2.C Block	5.Slab	8.
3.Br/Stone	6.Piers	9.

Basement		
1.1/4 Bmt	4.Full Bmt	7.
2.1/2 Bmt	5.None	8.
3.3/4 Bmt	6.	9.None

Bsmt Gar # Cars

Wet Basement		
1.Dry	4.	7.
2.Damp	5.	8.
3.Wet	6.	9.

SF Bsmt Living
Fin Bsmt Grade
OPEN-5-CUSTOMIZE

Heat Type **100%**		
0.Uncoded	4.Steam	8.Fl/Wall
1.HWBB	5.FWA	9.No Heat
2.HWCI	6.GravWA	10.Radiabt
3.H Pump	7.Electric	12.

Cool Type **100%**		
1.Refrig	4.W&C Air	7.
2.Evapor	5.	8.
3.H Pump	6.	9.None

Kitchen Style		
1.Modern	4.Obsolete	7.
2.Typical	5.	8.
3.Old Type	6.	9.None

Bath(s) Style		
1.Modern	4.Obsolete	7.
2.Typical	5.	8.
3.Old Type	6.	9.None

Rooms
Bedrooms
Full Baths
Half Baths
Addn Fixtures
Fireplaces

TRIO Software
A Division of Harris Computer Systems

Layout		
1.Typical	4.	7.
2.Inadeq	5.	8.
3.Horrid	6.	9.

Attic		
1.1/4 Fin	4.Full Fin	7.
2.1/2 Fin	5.Fl/Stair	8.
3.3/4 Fin	6.	9.None

Insulation		
1.Full	4.Minimal	7.
2.Heavy	5.Partial	8.
3.Capped	6.	9.None

Unfinished %

Grade & Factor		
1.E Grade	4.B Grade	7.AAA Grad
2.D Grade	5.A Grade	8.SC Grade
3.C Grade	6.AA Grade	9.Same

SQFT (Footprint)

Condition		
1.Poor	4.Avg	7.V G
2.Fair	5.Avg+	8.Exc
3.Avg-	6.Good	9.Same

Phys. % Good
Funct. % Good

Functional Code		
1.Incomp	4.Delap	7.Seasonal
2.O-Built	5.Bsmt	8.
3.Fire	6.2014 ADJ	9.None

Econ. % Good

Economic Code		
0.None	3.No Power	7.
1.Location	4.Generate	8.
2.Encroach	9.None	9.

Entrance Code **0**		
1.Interior	4.Vacant	7.
2.Refusal	5.Estimate	8.
3.Informed	6.	9.

Information Code **0**		
1.Owner	4.Agent	7.
2.Relative	5.Estimate	8.
3.Tenant	6.Other	9.

Date Inspected

Additions, Outbuildings & Improvements

Type	Year	Units	Grade	Cond	Phys.	Funct.	Sound Value
					%	%	
					%	%	
					%	%	
					%	%	
					%	%	
					%	%	
					%	%	
					%	%	
					%	%	
					%	%	

1.One Story Fram
2.Two Story Fram
3.Three Story Fr
4.1 & 1/2 Story
5.1 & 3/4 Story
6.2 & 1/2 Story
21.Open Frame Por
22.Encl Frame Por
23.Frame Garage
24.Frame Shed
25.Frame Bay Wind
26.1SFr Overhang
27.Unfin Basement
28.Unfinished Att
29.Finished Attic

Map Lot 223-019 Account 1908 Location 49 POPLAR LANE Card 1 Of 1 11/30/2020

GOGGIN, WADE
GOGGIN, HOLLY
49 POPLAR LANE
HANCOCK ME 04640

B4269P225 B6704P106

Previous Owner
GOGGIN, ABBIE JANE
49 POPLAR LANE

HANCOCK ME 04640
Sale Date: 1/18/2017

Previous Owner
CLOUGH, HELEN ET AL
49 POPLAR LANE

HANCOCK ME 04640
Sale Date: 8/05/2005

Inspection Witnessed By:

X Date

No./Date	Description	Date Insp.

Notes:

Hancock

Property Data

Neighborhood	**66 Neighborhood 66**
Tree Growth Year	**0**
TREE GROWTH RECERTIFY	**0**
STATE SALE CODE	**0**
Zone/Land Use	**11 Residential**
Secondary Zone	

Topography

1.Level	4.Below St	7.
2.Rolling	5.Low	8.
3.Above St	6.Swampy	9.

Utilities

1.Public	4.Dr Well	7.Cesspool
2.Water	5.Dug Well	8.
3.Sewer	6.Septic	9.None

Street **1 Paved**

1.Paved	4.Proposed	7.
2.Semi Imp	5.	8.
3.Gravel	6.	9.None

REVIEW STRUCTURE YEAR	**0**
RENTAL? 0=NO 1=YES	**0**

Sale Data

Sale Date	**1/18/2017**
Price	**28,000**

Sale Type **2 Land & Buildings**

1.Land	4.Mobile	7.
2.L & B	5.Other	8.
3.Building	6.	9.

Financing **9 Unknown**

1.Convent	4.Seller	7.
2.FHA/VA	5.Private	8.
3.Assumed	6.Cash	9.Unknown

Validity **2 Related Parties**

1.Valid	4.Split	7.Changes
2.Related	5.Partial	8.Other
3.Distress	6.Exempt	9.Fr Ffclse

Verified **5 Public Record**

1.Buyer	4.Agent	7.Family
2.Seller	5.Pub Rec	8.Other
3.Lender	6.MLS	9.

Assessment Record

Year	Land	Buildings	Exempt	Total
2007	50,100	149,000	13,000	186,100
2008	50,100	149,000	13,000	186,100
2009	50,100	149,000	13,000	186,100
2010	50,100	149,000	10,000	189,100
2011	50,100	149,000	10,000	189,100
2012	50,100	149,000	10,000	189,100
2013	50,100	149,000	10,000	189,100
2014	50,100	141,500	10,800	180,800
2015	50,100	141,500	11,000	180,600
2016	50,100	141,500	16,500	175,100
2017	50,100	140,100	22,000	168,200
2018	50,100	141,800	22,000	169,900
2019	50,100	141,800	22,000	169,900
2020	50,100	141,800	25,000	166,900

Land Data

Front Foot	Type	Effective Frontage	Effective Depth	Influence Factor	Influence Code
11.Regular Lot				%	
12.Delta Triangle				%	
13.Nabla Triangle				%	
14.Rear Land				%	
15.Miscellaneous				%	
				%	
				%	
Square Foot		**Square Feet**			
16.Regular Lot				%	
17.Secondary Lot				%	
18.Excess Land				%	
19.Condominium				%	
20.Miscellaneous				%	
				%	
				%	
Fract. Acre		**Acreage/Sites**			
21.Homesite (Frac	21	1.00		70 %	0
22.Baselot (Fract	24	1.52		70 %	0
23.Misc (Fract)	44	1.00		100 %	0
Acres				%	
24.Excess Acres 1				%	
25.Excess Acres 5				%	
26.Excess Acres 2				%	
27.Excess Acres 5				%	
28.Excess Acres 1				%	
29.Excess acres				%	

Total Acreage 2.52

Influence Codes

1.Unimproved
2.Excess Frtg
3.Topography
4.Size/Shape
5.Access
6.Restriction
7.Corner Infl
8.Environment
9.Fract Share
Acres
30.Industrial Sit
31.Working Waterf
32.Cultivated Cro
33.Pasture
34.Softwood (Farm
35.Mixed Wood (Fa
36.Hardwood (Farm
37.Softwood
38.Mixed Wood
39.Hardwood
40.Wasteland
41.Gravel Pit
42.Mobile Home Si
43.Location Base
44.Lot Improvemen
45.Waterfront A
46.Lobster Pound

Hancock

Map Lot 223-019 | Account 1908 | Location 49 POPLAR LANE | Card 1 Of 1 | 11/30/2020

Building Style	**2 Ranch**	
0.Uncoded	4.Cape	8.Log
1.Conv.	5.Garrison	9.Other
2.Ranch	6.Colonial	10.Dutch C
3.R Ranch	7.Contemp	11.Farmhou
Dwelling Units	**1**	
Other Units	**0**	
Stories	**1 One Story**	
1.1	4.1.5	7.3.5
2.2	5.1.75	8.
3.3	6.2.5	9.
Exterior Walls	**2 Vinyl/Aluminum**	
0.Uncoded	4.Asbestos	8.Stone
1.Wood	5.Stucco	9.Other
2.Vin/Al	6.Brick Ve	10.Concret
3.Compos.	7.Solid Br	12.
Roof Surface	**1 Asphalt Shingles**	
1.Asphalt	4.Composit	7.
2.Slate	5.Wood	8.
3.Metal	6.Other	9.
SF Masonry Trim	**0**	
OPEN-3-CUSTOM	**0**	
OPEN-4-CUSTOM	**0**	
Year Built	**2005**	
Year Remodeled	**0**	
Foundation	**1 Concrete**	
1.Concrete	4.Wood	7.
2.C Block	5.Slab	8.
3.Br/Stone	6.Piers	9.
Basement	**4 Full Basement**	
1.1/4 Bmt	4.Full Bmt	7.
2.1/2 Bmt	5.None	8.
3.3/4 Bmt	6.	9.None
Bsmt Gar # Cars	**0**	
Wet Basement	**1 Dry Basement**	
1.Dry	4.	7.
2.Damp	5.	8.
3.Wet	6.	9.

SF Bsmt Living	**0**	
Fin Bsmt Grade	**0 0**	
OPEN-5-CUSTOMIZE	**0**	
Heat Type	**100%**	**1 Hot Water BB**
0.Uncoded	4.Steam	8.Fl/Wall
1.HWBB	5.FWA	9.No Heat
2.HWCI	6.GravWA	10.Radiabt
3.H Pump	7.Electric	12.
Cool Type	**100%**	**9 None**
1.Refrig	4.W&C Air	7.
2.Evapor	5.	8.
3.H Pump	6.	9.None
Kitchen Style	**2 Typical**	
1.Modern	4.Obsolete	7.
2.Typical	5.	8.
3.Old Type	6.	9.None
Bath(s) Style	**2 Typical Bath(s)**	
1.Modern	4.Obsolete	7.
2.Typical	5.	8.
3.Old Type	6.	9.None
# Rooms	**6**	
# Bedrooms	**3**	
# Full Baths	**2**	
# Half Baths	**0**	
# Addn Fixtures	**0**	
# Fireplaces	**0**	

TRIO Software
A Division of Harris Computer Systems

Layout	**1 Typical**	
1.Typical	4.	7.
2.Inadeq	5.	8.
3.Horrid	6.	9.
Attic	**9 None**	
1.1/4 Fin	4.Full Fin	7.
2.1/2 Fin	5.Fl/Stair	8.
3.3/4 Fin	6.	9.None
Insulation	**1 Full**	
1.Full	4.Minimal	7.
2.Heavy	5.Partial	8.
3.Capped	6.	9.None
Unfinished %	**0%**	
Grade & Factor	**3 Average 110%**	
1.E Grade	4.B Grade	7.AAA Grad
2.D Grade	5.A Grade	8.SC Grade
3.C Grade	6.AA Grade	9.Same
SQFT (Footprint)	**1080**	
Condition	**4 Average**	
1.Poor	4.Avg	7.V G
2.Fair	5.Avg+	8.Exc
3.Avg-	6.Good	9.Same
Phys. % Good	**0%**	
Funct. % Good	**95%**	
Functional Code	**6 2014 ADJUSTMENT**	
1.Incomp	4.Delap	7.Seasonal
2.O-Built	5.Bsmt	8.
3.Fire	6.2014 ADJ	9.None
Econ. % Good	**100%**	
Economic Code	**None**	
0.None	3.No Power	7.
1.Location	4.Generate	8.
2.Encroach	9.None	9.
Entrance Code	**0**	
1.Interior	4.Vacant	7.
2.Refusal	5.Estimate	8.
3.Informed	6.	9.
Information Code	**0**	
1.Owner	4.Agent	7.
2.Relative	5.Estimate	8.
3.Tenant	6.Other	9.

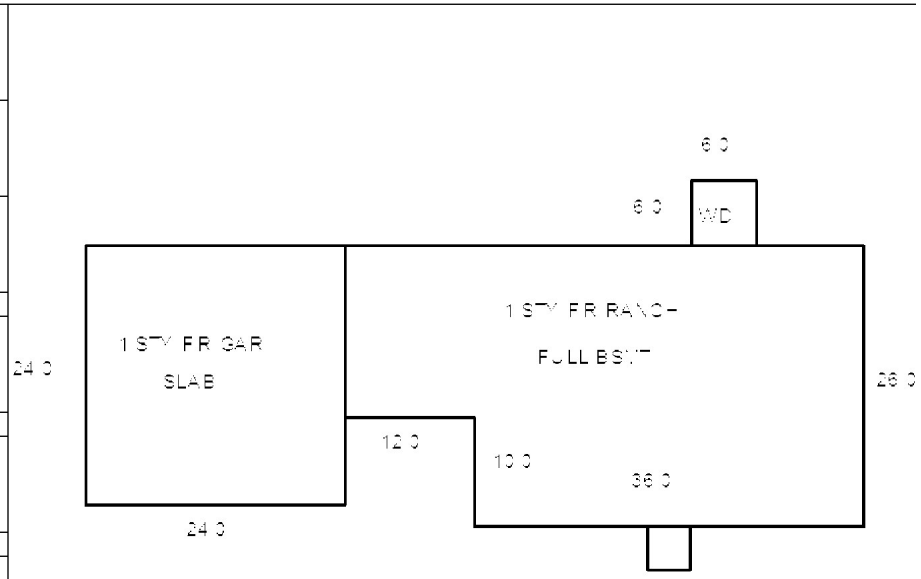

Date Inspected

Additions, Outbuildings & Improvements

Type	Year	Units	Grade	Cond	Phys.	Funct.	Sound Value
81 1 SF GARAGE	2005	576	0 0	0	0 %	0 %	
68 Wood Deck	2018	192	0 0	0	0 %	0 %	
					%	%	
					%	%	
					%	%	
					%	%	
					%	%	
					%	%	
					%	%	
					%	%	

1.One Story Fram
2.Two Story Fram
3.Three Story Fr
4.1 & 1/2 Story
5.1 & 3/4 Story
6.2 & 1/2 Story
21.Open Frame Por
22.Encl Frame Por
23.Frame Garage
24.Frame Shed
25.Frame Bay Wind
26.1SFr Overhang
27.Unfin Basement
28.Unfinished Att
29.Finished Attic

Map Lot 223-020 Account 1906 Location 29 POPLAR LANE Card 1 Of 1 11/30/2020

TURCOTTE, JEFFREY V
TURCOTTE, JENNIFER A
29 POPLAR LN
HANCOCK ME 04640

B6152P89 B6864P719 B6971P83 B6975P563 B7009P210

Previous Owner
WW WOOD PROPERTIES LLC
PO BOX 358

HOLDEN ME 04429
Sale Date: 3/04/2020

Previous Owner
AMERICAN ADVISORS GROUP
3900 W. CHAPMAN AVE 3RD FLOOR

ORANGE CA 92868
Sale Date: 9/06/2019

Previous Owner
AMERICAN ADVISORS GROUP
3800 W. CHAPMAN AVE
3RD FLOOR
ORANGE CA 92868
Sale Date: 8/23/2019

Inspection Witnessed By:

X Date

No./Date	Description	Date Insp.

Notes:

Property Data

Neighborhood **66 Neighborhood 66**

Tree Growth Year **0**

TREE GROWTH RECERTIFY **0**

STATE SALE CODE **0**

Zone/Land Use **11 Residential**

Secondary Zone

Topography

1.Level 4.Below St 7.
2.Rolling 5.Low 8.
3.Above St 6.Swampy 9.

Utilities

1.Public 4.Dr Well 7.Cesspool
2.Water 5.Dug Well 8.
3.Sewer 6.Septic 9.None

Street **1 Paved**

1.Paved 4.Proposed 7.
2.Semi Imp 5. 8.
3.Gravel 6. 9.None

REVIEW STRUCTURE YEAR **0**

RENTAL? 0=NO 1=YES **0**

Sale Data

Sale Date **3/04/2020**

Price **312,500**

Sale Type **2 Land & Buildings**

1.Land 4.Mobile 7.
2.L & B 5.Other 8.
3.Building 6. 9.

Financing **9 Unknown**

1.Convent 4.Seller 7.
2.FHA/VA 5.Private 8.
3.Assumed 6.Cash 9.Unknown

Validity **1 Arms Length Sale**

1.Valid 4.Split 7.Changes
2.Related 5.Partial 8.Other
3.Distress 6.Exempt 9.Fr Ffclse

Verified **5 Public Record**

1.Buyer 4.Agent 7.Family
2.Seller 5.Pub Rec 8.Other
3.Lender 6.MLS 9.

Assessment Record

Year	Land	Buildings	Exempt	Total
2007	36,500	241,700	0	278,200
2008	36,500	242,600	0	279,100
2009	36,500	242,600	0	279,100
2010	36,500	242,600	0	279,100
2011	36,500	242,600	0	279,100
2012	36,500	242,600	0	279,100
2013	36,500	242,600	0	279,100
2014	36,500	242,600	0	279,100
2015	36,500	242,600	0	279,100
2016	36,500	242,600	0	279,100
2017	36,500	242,600	0	279,100
2018	36,500	242,600	0	279,100
2019	36,500	242,600	0	279,100
2020	36,500	242,600	25,000	254,100

Land Data

Front Foot	Type	Effective Frontage	Effective Depth	Influence Factor	Influence Code
11.Regular Lot				%	
12.Delta Triangle				%	
13.Nabla Triangle				%	
14.Rear Land				%	
15.Miscellaneous				%	
				%	
				%	
Square Foot		**Square Feet**			
16.Regular Lot				%	
17.Secondary Lot				%	
18.Excess Land				%	
19.Condominium				%	
20.Miscellaneous				%	
				%	
				%	
Fract. Acre		**Acreage/Sites**			
21.Homesite (Frac	21	1.00		70 %	0
22.Baselot (Fract	24	1.41		70 %	0
23.Misc (Fract)				%	
Acres				%	
24.Excess Acres 1				%	
25.Excess Acres 5				%	
26.Excess Acres 2				%	
27.Excess Acres 5				%	
28.Excess Acres 1				%	
29.Excess acres				%	

Total Acreage 2.41

Influence Codes

1.Unimproved
2.Excess Frtg
3.Topography
4.Size/Shape
5.Access
6.Restriction
7.Corner Infl
8.Environment
9.Fract Share
Acres
30.Industrial Sit
31.Working Waterf
32.Cultivated Cro
33.Pasture
34.Softwood (Farm
35.Mixed Wood (Fa
36.Hardwood (Farm
37.Softwood
38.Mixed Wood
39.Hardwood
40.Wasteland
41.Gravel Pit
42.Mobile Home Si
43.Location Base
44.Lot Improvemen
45.Waterfront A
46.Lobster Pound

Hancock

Hancock

Map Lot 223-020 | Account 1906 | Location 29 POPLAR LANE | Card 1 Of 1 | 11/30/2020

Building Style	**2 Ranch**		
0.Uncoded	4.Cape	8.Log	
1.Conv.	5.Garrison	9.Other	
2.Ranch	6.Colonial	10.Dutch C	
3.R Ranch	7.Contemp	11.Farmhou	
Dwelling Units	**1**		
Other Units	**0**		
Stories	**1 One Story**		
1.1	4.1.5	7.3.5	
2.2	5.1.75	8.	
3.3	6.2.5	9.	
Exterior Walls	**2 Vinyl/Aluminum**		
0.Uncoded	4.Asbestos	8.Stone	
1.Wood	5.Stucco	9.Other	
2.Vin/Al	6.Brick Ve	10.Concret	
3.Compos.	7.Solid Br	12.	
Roof Surface	**1 Asphalt Shingles**		
1.Asphalt	4.Composit	7.	
2.Slate	5.Wood	8.	
3.Metal	6.Other	9.	
SF Masonry Trim	**0**		
OPEN-3-CUSTOM	**0**		
OPEN-4-CUSTOM	**0**		
Year Built	**2006**		
Year Remodeled	**0**		
Foundation	**1 Concrete**		
1.Concrete	4.Wood	7.	
2.C Block	5.Slab	8.	
3.Br/Stone	6.Piers	9.	
Basement	**4 Full Basement**		
1.1/4 Bmt	4.Full Bmt	7.	
2.1/2 Bmt	5.None	8.	
3.3/4 Bmt	6.	9.None	
Bsmt Gar # Cars	**0**		
Wet Basement	**1 Dry Basement**		
1.Dry	4.	7.	
2.Damp	5.	8.	
3.Wet	6.	9.	

SF Bsmt Living	**0**		
Fin Bsmt Grade	**0 0**		
OPEN-5-CUSTOMIZE	**0**		
Heat Type	**100%**	**1 Hot Water BB**	
0.Uncoded	4.Steam	8.Fl/Wall	
1.HWBB	5.FWA	9.No Heat	
2.HWCI	6.GravWA	10.Radiabt	
3.H Pump	7.Electric	12.	
Cool Type	**100%**	**9 None**	
1.Refrig	4.W&C Air	7.	
2.Evapor	5.	8.	
3.H Pump	6.	9.None	
Kitchen Style	**2 Typical**		
1.Modern	4.Obsolete	7.	
2.Typical	5.	8.	
3.Old Type	6.	9.None	
Bath(s) Style	**2 Typical Bath(s)**		
1.Modern	4.Obsolete	7.	
2.Typical	5.	8.	
3.Old Type	6.	9.None	
# Rooms	**7**		
# Bedrooms	**3**		
# Full Baths	**2**		
# Half Baths	**1**		
# Addn Fixtures	**0**		
# Fireplaces	**0**		

TRIO Software
A Division of Harris Computer Systems

Layout	**1 Typical**		
1.Typical	4.	7.	
2.Inadeq	5.	8.	
3.Horrid	6.	9.	
Attic	**9 None**		
1.1/4 Fin	4.Full Fin	7.	
2.1/2 Fin	5.Fl/Stair	8.	
3.3/4 Fin	6.	9.None	
Insulation	**1 Full**		
1.Full	4.Minimal	7.	
2.Heavy	5.Partial	8.	
3.Capped	6.	9.None	
Unfinished %	**0%**		
Grade & Factor	**3 Average 110%**		
1.E Grade	4.B Grade	7.AAA Grad	
2.D Grade	5.A Grade	8.SC Grade	
3.C Grade	6.AA Grade	9.Same	
SQFT (Footprint)	**1800**		
Condition	**4 Average**		
1.Poor	4.Avg	7.V G	
2.Fair	5.Avg+	8.Exc	
3.Avg-	6.Good	9.Same	
Phys. % Good	**0%**		
Funct. % Good	**100%**		
Functional Code	**9 None**		
1.Incomp	4.Delap	7.Seasonal	
2.O-Built	5.Bsmt	8.	
3.Fire	6.2014 ADJ	9.None	
Econ. % Good	**100%**		
Economic Code	**None**		
0.None	3.No Power	7.	
1.Location	4.Generate	8.	
2.Encroach	9.None	9.	
Entrance Code	**0**		
1.Interior	4.Vacant	7.	
2.Refusal	5.Estimate	8.	
3.Informed	6.	9.	
Information Code	**0**		
1.Owner	4.Agent	7.	
2.Relative	5.Estimate	8.	
3.Tenant	6.Other	9.	

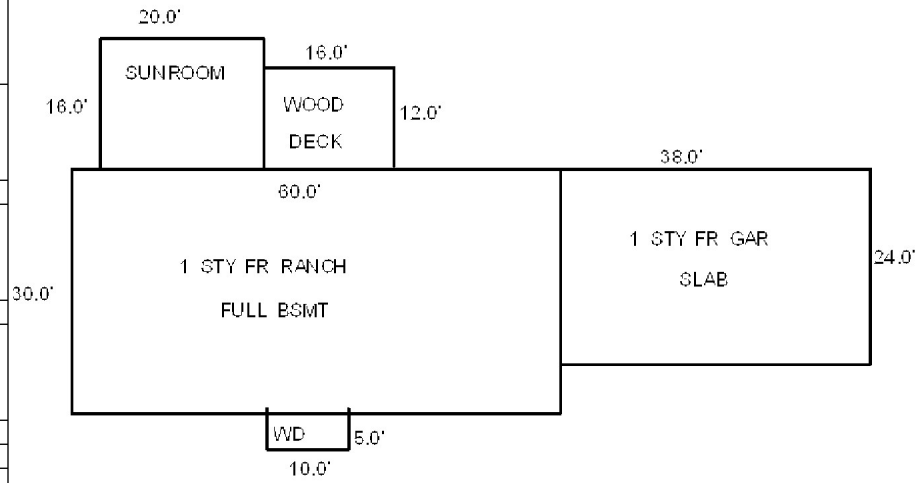

Date Inspected

Additions, Outbuildings & Improvements

Type	Year	Units	Grade	Cond	Phys.	Funct.	Sound Value
22 Encl Frame Porch	0	320	5 100	4	0 %	100 %	
68 Wood Deck	0	192	4 100	4	0 %	100 %	
68 Wood Deck	0	50	4 100	4	0 %	100 %	
81 1 SF GARAGE	0	912	3 100	4	0 %	100 %	
					%	%	
					%	%	
					%	%	
					%	%	
					%	%	
					%	%	

1.One Story Fram
2.Two Story Fram
3.Three Story Fr
4.1 & 1/2 Story
5.1 & 3/4 Story
6.2 & 1/2 Story
21.Open Frame Por
22.Encl Frame Por
23.Frame Garage
24.Frame Shed
25.Frame Bay Wind
26.1SFr Overhang
27.Unfin Basement
28.Unfinished Att
29.Finished Attic