Map Lot 111-001 Account 621 Location 611 EASTSIDE ROAD Card 1 Of 1 10/01/2020

CRAMER, RONALD
CRAMER, NANCY
611 EASTSIDE ROAD
HANCOCK ME 04640

B3847P14 B6040P74

Previous Owner
LAY, DANIEL M.
LAY, STACI L.
191 COOMBS ROAD
BRUNSWICK ME 04011
Sale Date: 5/20/2013

Inspection Witnessed By:

X Date

| No./Date | Description | Date Insp. |
|---|---|---|
| | | |
| | | |
| | | |

Notes:

MORTGAGE TO DANIEL LAY B2968 P194
HUFF, ROY DEVISEE 2000 TAXES BOOK2236 PAGE194

**Hancock 2020**

## Property Data

Neighborhood **18 Neighborhood 18**

Tree Growth Year **0**

TREE GROWTH RECERTIFY **0**

STATE SALE CODE **0**

Zone/Land Use **11 Residential**

Secondary Zone

Topography **9** **9**

1.Level 4.Below St 7.
2.Rolling 5.Low 8.
3.Above St 6.Swampy 9.

Utilities **9 None** **9 None**

1.Public 4.Dr Well 7.Cesspool
2.Water 5.Dug Well 8.
3.Sewer 6.Septic 9.None

Street **9 None**

1.Paved 4.Proposed 7.
2.Semi Imp 5. 8.
3.Gravel 6. 9.None

REVIEW STRUCTURE YEAR **0**

RENTAL? 0=NO 1=YES **1**

## Sale Data

Sale Date **5/20/2013**

Price **345,000**

Sale Type **2 Land & Buildings**

1.Land 4.Mobile 7.
2.L & B 5.Other 8.
3.Building 6. 9.

Financing **9 Unknown**

1.Convent 4.Seller 7.
2.FHA/VA 5.Private 8.
3.Assumed 6.Cash 9.Unknown

Validity **1 Arms Length Sale**

1.Valid 4.Split 7.Changes
2.Related 5.Partial 8.Other
3.Distress 6.Exempt 9.Fr Ffclse

Verified **5 Public Record**

1.Buyer 4.Agent 7.Family
2.Seller 5.Pub Rec 8.Other
3.Lender 6.MLS 9.

## Assessment Record

| Year | Land | Buildings | Exempt | Total |
|---|---|---|---|---|
| 2007 | 113,400 | 196,000 | 0 | 309,400 |
| 2008 | 127,400 | 196,000 | 0 | 323,400 |
| 2009 | 127,400 | 196,000 | 0 | 323,400 |
| 2010 | 127,400 | 196,000 | 0 | 323,400 |
| 2011 | 127,400 | 196,000 | 0 | 323,400 |
| 2012 | 127,400 | 196,000 | 0 | 323,400 |
| 2013 | 127,400 | 196,000 | 0 | 323,400 |
| 2014 | 127,400 | 196,000 | 0 | 323,400 |
| 2015 | 127,400 | 234,700 | 0 | 362,100 |
| 2016 | 127,400 | 241,600 | 0 | 369,000 |
| 2017 | 127,400 | 241,600 | 0 | 369,000 |
| 2018 | 127,400 | 241,600 | 0 | 369,000 |
| 2019 | 127,400 | 241,600 | 0 | 369,000 |
| 2020 | 127,400 | 241,600 | 0 | 369,000 |

## Land Data

**Front Foot**

11.Regular Lot
12.Delta Triangle
13.Nabla Triangle
14.Rear Land
15.Miscellaneous

**Square Foot**

16.Regular Lot
17.Secondary Lot
18.Excess Land
19.Condominium
20.Miscellaneous

**Fract. Acre**

21.Homesite (Frac
22.Baselot (Fract
23.Misc (Fract)
**Acres**
24.Excess Acres 1
25.Excess Acres 5
26.Excess Acres 2
27.Excess Acres 5
28.Excess Acres 1
29.Excess acres

| Type | Effective Frontage | Effective Depth | Influence Factor | Influence Code |
|---|---|---|---|---|
| | | | % | |
| | | | % | |
| | | | % | |
| | | | % | |
| | | | % | |
| | | | % | |
| | | | % | |
| | **Square Feet** | | | |
| | | | % | |
| | | | % | |
| | | | % | |
| | | | % | |
| | | | % | |
| | | | % | |
| | | | % | |
| | **Acreage/Sites** | | | |
| 21 | 1.00 | | 100 % | 0 |
| 24 | 4.00 | | 100 % | 0 |
| 25 | 12.00 | | 100 % | 0 |
| 40 | 2.30 | | 100 % | 0 |
| 44 | 2.30 | | 100 % | 0 |
| | | | % | |
| | | | % | |

**Total Acreage** 19.30

**Influence Codes**

1.Unimproved
2.Excess Frtg
3.Topography
4.Size/Shape
5.Access
6.Restriction
7.Corner Infl
8.Environment
9.Fract Share
**Acres**
30.Industrial Sit
31.Working Waterf
32.Cultivated Cro
33.Pasture
34.Softwood (Farm
35.Mixed Wood (Fa
36.Hardwood (Farm
37.Softwood
38.Mixed Wood
39.Hardwood
40.Wasteland
41.Gravel Pit
42.Mobile Home Si
43.Location Base
44.Lot Improvemen
45.Waterfront A
46.Lobster Pound

# Hancock 2020

Map Lot 111-001 | Account 621 | Location 611 EASTSIDE ROAD | Card 1 Of 1 | 10/01/2020

| | | | |
|---|---|---|---|
| Building Style | **1 Conventional** | | |
| 0.Uncoded | 4.Cape | 8.Log | |
| 1.Conv. | 5.Garrison | 9.Other | |
| 2.Ranch | 6.Colonial | 10.Dutch C | |
| 3.R Ranch | 7.Contemp | 11.Farmhou | |
| Dwelling Units | **1** | | |
| Other Units | **0** | | |
| Stories | **2 Two Story** | | |
| 1.1 | 4.1.5 | 7.3.5 | |
| 2.2 | 5.1.75 | 8. | |
| 3.3 | 6.2.5 | 9. | |
| Exterior Walls | **1 Wood Siding** | | |
| 0.Uncoded | 4.Asbestos | 8.Stone | |
| 1.Wood | 5.Stucco | 9.Other | |
| 2.Vin/Al | 6.Brick Ve | 10.Concret | |
| 3.Compos. | 7.Solid Br | 12. | |
| Roof Surface | **1 Asphalt Shingles** | | |
| 1.Asphalt | 4.Composit | 7. | |
| 2.Slate | 5.Wood | 8. | |
| 3.Metal | 6.Other | 9. | |
| SF Masonry Trim | **0** | | |
| OPEN-3-CUSTOM | **0** | | |
| OPEN-4-CUSTOM | **0** | | |
| Year Built | **2001** | | |
| Year Remodeled | **0** | | |
| Foundation | **1 Concrete** | | |
| 1.Concrete | 4.Wood | 7. | |
| 2.C Block | 5.Slab | 8. | |
| 3.Br/Stone | 6.Piers | 9. | |
| Basement | **4 Full Basement** | | |
| 1.1/4 Bmt | 4.Full Bmt | 7. | |
| 2.1/2 Bmt | 5.None | 8. | |
| 3.3/4 Bmt | 6. | 9.None | |
| Bsmt Gar # Cars | **0** | | |
| Wet Basement | **1 Dry Basement** | | |
| 1.Dry | 4. | 7. | |
| 2.Damp | 5. | 8. | |
| 3.Wet | 6. | 9. | |

| | | | |
|---|---|---|---|
| SF Bsmt Living | **0** | | |
| Fin Bsmt Grade | **0 0** | | |
| OPEN-5-CUSTOMIZE | **0** | | |
| Heat Type | **100%** | **1 Hot Water BB** | |
| 0.Uncoded | 4.Steam | 8.Fl/Wall | |
| 1.HWBB | 5.FWA | 9.No Heat | |
| 2.HWCI | 6.GravWA | 10.Radiabt | |
| 3.H Pump | 7.Electric | 12. | |
| Cool Type | **100%** | **9 None** | |
| 1.Refrig | 4.W&C Air | 7. | |
| 2.Evapor | 5. | 8. | |
| 3.H Pump | 6. | 9.None | |
| Kitchen Style | **2 Typical** | | |
| 1.Modern | 4.Obsolete | 7. | |
| 2.Typical | 5. | 8. | |
| 3.Old Type | 6. | 9.None | |
| Bath(s) Style | **2 Typical Bath(s)** | | |
| 1.Modern | 4.Obsolete | 7. | |
| 2.Typical | 5. | 8. | |
| 3.Old Type | 6. | 9.None | |
| # Rooms | **6** | | |
| # Bedrooms | **3** | | |
| # Full Baths | **1** | | |
| # Half Baths | **1** | | |
| # Addn Fixtures | **0** | | |
| # Fireplaces | **1** | | |

TRIO Software
A Division of Harris Computer Systems

| | | | |
|---|---|---|---|
| Layout | **1 Typical** | | |
| 1.Typical | 4. | 7. | |
| 2.Inadeq | 5. | 8. | |
| 3.Horrid | 6. | 9. | |
| Attic | **9 None** | | |
| 1.1/4 Fin | 4.Full Fin | 7. | |
| 2.1/2 Fin | 5.Fl/Stair | 8. | |
| 3.3/4 Fin | 6. | 9.None | |
| Insulation | **1 Full** | | |
| 1.Full | 4.Minimal | 7. | |
| 2.Heavy | 5.Partial | 8. | |
| 3.Capped | 6. | 9.None | |
| Unfinished % | **0%** | | |
| Grade & Factor | **3 Average 100%** | | |
| 1.E Grade | 4.B Grade | 7.AAA Grad | |
| 2.D Grade | 5.A Grade | 8.SC Grade | |
| 3.C Grade | 6.AA Grade | 9.Same | |
| SQFT (Footprint) | **896** | | |
| Condition | **4 Average** | | |
| 1.Poor | 4.Avg | 7.V G | |
| 2.Fair | 5.Avg+ | 8.Exc | |
| 3.Avg- | 6.Good | 9.Same | |
| Phys. % Good | **0%** | | |
| Funct. % Good | **100%** | | |
| Functional Code | **9 None** | | |
| 1.Incomp | 4.Delap | 7.Seasonal | |
| 2.O-Built | 5.Bsmt | 8. | |
| 3.Fire | 6.2014 ADJ | 9.None | |
| Econ. % Good | **100%** | | |
| Economic Code | **None** | | |
| 0.None | 3.No Power | 7. | |
| 1.Location | 4.Generate | 8. | |
| 2.Encroach | 9.None | 9. | |
| Entrance Code | **0** | | |
| 1.Interior | 4.Vacant | 7. | |
| 2.Refusal | 5.Estimate | 8. | |
| 3.Informed | 6. | 9. | |
| Information Code | **0** | | |
| 1.Owner | 4.Agent | 7. | |
| 2.Relative | 5.Estimate | 8. | |
| 3.Tenant | 6.Other | 9. | |

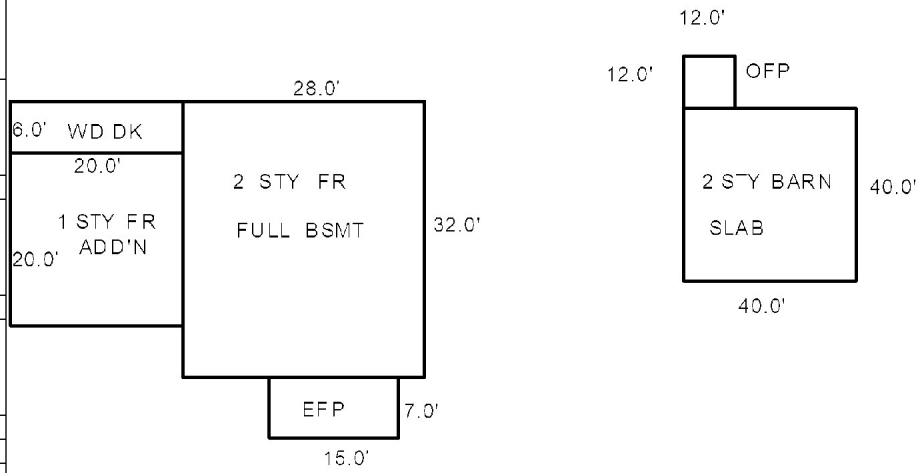

Date Inspected

## Additions, Outbuildings & Improvements

| Type | Year | Units | Grade | Cond | Phys. | Funct. | Sound Value |
|---|---|---|---|---|---|---|---|
| 68 Wood Deck | 0 | 120 | 0 0 | 0 | 0 % | 0 % | |
| 1 One Story Frame | 0 | 400 | 0 0 | 0 | 0 % | 0 % | |
| 22 Encl Frame Porch | 2015 | 105 | 0 0 | 0 | 0 % | 0 % | |
| 67 Barn | 2015 | 1600 | 6 100 | 4 | 0 % | 100 % | |
| | | | | | % | % | |
| | | | | | % | % | |
| | | | | | % | % | |
| | | | | | % | % | |
| | | | | | % | % | |
| | | | | | % | % | |

1.One Story Fram
2.Two Story Fram
3.Three Story Fr
4.1 & 1/2 Story
5.1 & 3/4 Story
6.2 & 1/2 Story
21.Open Frame Por
22.Encl Frame Por
23.Frame Garage
24.Frame Shed
25.Frame Bay Wind
26.1SFr Overhang
27.Unfin Basement
28.Unfinished Att
29.Finished Attic

Map Lot 111-002 Account 1462 Location EASTSIDE ROAD Card 1 Of 1 10/01/2020

CRABTREE NECK LAND TRUST
P O BOX 273
HANCOCK ME 04640

B5229P48

Previous Owner
PATRICK, WILLIAM
602 EASTSIDE ROAD

HANCOCK ME 04640
Sale Date: 3/15/2007

Previous Owner
PEAKE, WILLIAM & ADELINE
602 EASTSIDE ROAD

HANCOCK ME 04640
Sale Date: 4/26/2006

Inspection Witnessed By:

X Date

| No./Date | Description | Date Insp. |
|---|---|---|
| | | |
| | | |
| | | |

Notes:

## Property Data

| | |
|---|---|
| Neighborhood | **18 Neighborhood 18** |
| Tree Growth Year | **0** |
| TREE GROWTH RECERTIFY | **0** |
| STATE SALE CODE | **0** |
| Zone/Land Use | **11 Residential** |
| Secondary Zone | |

Topography

| | | |
|---|---|---|
| 1.Level | 4.Below St | 7. |
| 2.Rolling | 5.Low | 8. |
| 3.Above St | 6.Swampy | 9. |

Utilities

| | | |
|---|---|---|
| 1.Public | 4.Dr Well | 7.Cesspool |
| 2.Water | 5.Dug Well | 8. |
| 3.Sewer | 6.Septic | 9.None |

Street

| | | |
|---|---|---|
| 1.Paved | 4.Proposed | 7. |
| 2.Semi Imp | 5. | 8. |
| 3.Gravel | 6. | 9.None |

| | |
|---|---|
| REVIEW STRUCTURE YEAR | **0** |
| RENTAL? 0=NO 1=YES | **0** |

## Sale Data

| | |
|---|---|
| Sale Date | **3/15/2007** |
| Price | **105,000** |
| Sale Type | **1 Land Only** |

| | | |
|---|---|---|
| 1.Land | 4.Mobile | 7. |
| 2.L & B | 5.Other | 8. |
| 3.Building | 6. | 9. |

| | |
|---|---|
| Financing | **9 Unknown** |

| | | |
|---|---|---|
| 1.Convent | 4.Seller | 7. |
| 2.FHA/VA | 5.Private | 8. |
| 3.Assumed | 6.Cash | 9.Unknown |

| | |
|---|---|
| Validity | **4 Split/Assemblage** |

| | | |
|---|---|---|
| 1.Valid | 4.Split | 7.Changes |
| 2.Related | 5.Partial | 8.Other |
| 3.Distress | 6.Exempt | 9.Fr Ffclse |

| | |
|---|---|
| Verified | **5 Public Record** |

| | | |
|---|---|---|
| 1.Buyer | 4.Agent | 7.Family |
| 2.Seller | 5.Pub Rec | 8.Other |
| 3.Lender | 6.MLS | 9. |

## Assessment Record

| Year | Land | Buildings | Exempt | Total |
|---|---|---|---|---|
| 2007 | 121,100 | 0 | 121,100 | 0 |
| 2008 | 121,100 | 0 | 121,100 | 0 |
| 2009 | 121,100 | 0 | 121,100 | 0 |
| 2010 | 121,100 | 0 | 121,100 | 0 |
| 2011 | 121,100 | 0 | 121,100 | 0 |
| 2012 | 121,100 | 0 | 121,100 | 0 |
| 2013 | 121,100 | 0 | 121,100 | 0 |
| 2014 | 121,100 | 0 | 121,100 | 0 |
| 2015 | 121,100 | 0 | 121,100 | 0 |
| 2016 | 121,100 | 0 | 121,100 | 0 |
| 2017 | 121,100 | 0 | 121,100 | 0 |
| 2018 | 121,100 | 0 | 121,100 | 0 |
| 2019 | 121,100 | 0 | 121,100 | 0 |
| 2020 | 121,100 | 0 | 121,100 | 0 |

## Land Data

| Front Foot | Type | Effective Frontage | Effective Depth | Influence Factor | Influence Code |
|---|---|---|---|---|---|
| 11.Regular Lot | | | | % | |
| 12.Delta Triangle | | | | % | |
| 13.Nabla Triangle | | | | % | |
| 14.Rear Land | | | | % | |
| 15.Miscellaneous | | | | % | |
| | | | | % | |
| | | | | % | |
| **Square Foot** | | **Square Feet** | | | |
| 16.Regular Lot | | | | % | |
| 17.Secondary Lot | | | | % | |
| 18.Excess Land | | | | % | |
| 19.Condominium | | | | % | |
| 20.Miscellaneous | | | | % | |
| | | | | % | |
| | | | | % | |
| **Fract. Acre** | | **Acreage/Sites** | | | |
| 21.Homesite (Frac | 21 | 1.00 | 100 | % | 0 |
| 22.Baselot (Fract | 24 | 4.00 | 100 | % | 0 |
| 23.Misc (Fract) | 25 | 19.00 | 100 | % | 0 |
| **Acres** | 40 | 5.90 | 100 | % | 0 |
| 24.Excess Acres 1 | | | | % | |
| 25.Excess Acres 5 | | | | % | |
| 26.Excess Acres 2 | | | | % | |
| 27.Excess Acres 5 | | | | | |
| 28.Excess Acres 1 | | | | | |
| 29.Excess acres | | | | | |

**Total Acreage** 29.90

### Influence Codes

1.Unimproved
2.Excess Frtg
3.Topography
4.Size/Shape
5.Access
6.Restriction
7.Corner Infl
8.Environment
9.Fract Share
**Acres**
30.Industrial Sit
31.Working Waterf
32.Cultivated Cro
33.Pasture
34.Softwood (Farm
35.Mixed Wood (Fa
36.Hardwood (Farm
37.Softwood
38.Mixed Wood
39.Hardwood
40.Wasteland
41.Gravel Pit
42.Mobile Home Si
43.Location Base
44.Lot Improvemen
45.Waterfront A
46.Lobster Pound

**Hancock 2020**

# Hancock 2020

Map Lot 111-002 | Account 1462 | Location EASTSIDE ROAD | Card 1 Of 1 | 10/01/2020

| Building Style | | |
|---|---|---|
| 0.Uncoded | 4.Cape | 8.Log |
| 1.Conv. | 5.Garrison | 9.Other |
| 2.Ranch | 6.Colonial | 10.Dutch C |
| 3.R Ranch | 7.Contemp | 11.Farmhou |

| Dwelling Units |
|---|
| Other Units |

| Stories | | |
|---|---|---|
| 1.1 | 4.1.5 | 7.3.5 |
| 2.2 | 5.1.75 | 8. |
| 3.3 | 6.2.5 | 9. |

| Exterior Walls | | |
|---|---|---|
| 0.Uncoded | 4.Asbestos | 8.Stone |
| 1.Wood | 5.Stucco | 9.Other |
| 2.Vin/Al | 6.Brick Ve | 10.Concret |
| 3.Compos. | 7.Solid Br | 12. |

| Roof Surface | | |
|---|---|---|
| 1.Asphalt | 4.Composit | 7. |
| 2.Slate | 5.Wood | 8. |
| 3.Metal | 6.Other | 9. |

| SF Masonry Trim |
|---|
| OPEN-3-CUSTOM |
| OPEN-4-CUSTOM |
| Year Built |
| Year Remodeled |

| Foundation | | |
|---|---|---|
| 1.Concrete | 4.Wood | 7. |
| 2.C Block | 5.Slab | 8. |
| 3.Br/Stone | 6.Piers | 9. |

| Basement | | |
|---|---|---|
| 1.1/4 Bmt | 4.Full Bmt | 7. |
| 2.1/2 Bmt | 5.None | 8. |
| 3.3/4 Bmt | 6. | 9.None |

| Bsmt Gar # Cars |
|---|

| Wet Basement | | |
|---|---|---|
| 1.Dry | 4. | 7. |
| 2.Damp | 5. | 8. |
| 3.Wet | 6. | 9. |

| SF Bsmt Living |
|---|
| Fin Bsmt Grade |
| OPEN-5-CUSTOMIZE |

| Heat Type **100%** | | |
|---|---|---|
| 0.Uncoded | 4.Steam | 8.Fl/Wall |
| 1.HWBB | 5.FWA | 9.No Heat |
| 2.HWCI | 6.GravWA | 10.Radiabt |
| 3.H Pump | 7.Electric | 12. |

| Cool Type **100%** | | |
|---|---|---|
| 1.Refrig | 4.W&C Air | 7. |
| 2.Evapor | 5. | 8. |
| 3.H Pump | 6. | 9.None |

| Kitchen Style | | |
|---|---|---|
| 1.Modern | 4.Obsolete | 7. |
| 2.Typical | 5. | 8. |
| 3.Old Type | 6. | 9.None |

| Bath(s) Style | | |
|---|---|---|
| 1.Modern | 4.Obsolete | 7. |
| 2.Typical | 5. | 8. |
| 3.Old Type | 6. | 9.None |

| # Rooms |
|---|
| # Bedrooms |
| # Full Baths |
| # Half Baths |
| # Addn Fixtures |
| # Fireplaces |

TRIO Software
A Division of Harris Computer Systems

| Layout | | |
|---|---|---|
| 1.Typical | 4. | 7. |
| 2.Inadeq | 5. | 8. |
| 3.Horrid | 6. | 9. |

| Attic | | |
|---|---|---|
| 1.1/4 Fin | 4.Full Fin | 7. |
| 2.1/2 Fin | 5.Fl/Stair | 8. |
| 3.3/4 Fin | 6. | 9.None |

| Insulation | | |
|---|---|---|
| 1.Full | 4.Minimal | 7. |
| 2.Heavy | 5.Partial | 8. |
| 3.Capped | 6. | 9.None |

| Unfinished % |
|---|

| Grade & Factor | | |
|---|---|---|
| 1.E Grade | 4.B Grade | 7.AAA Grad |
| 2.D Grade | 5.A Grade | 8.SC Grade |
| 3.C Grade | 6.AA Grade | 9.Same |

| SQFT (Footprint) |
|---|

| Condition | | |
|---|---|---|
| 1.Poor | 4.Avg | 7.V G |
| 2.Fair | 5.Avg+ | 8.Exc |
| 3.Avg- | 6.Good | 9.Same |

| Phys. % Good |
|---|
| Funct. % Good |

| Functional Code | | |
|---|---|---|
| 1.Incomp | 4.Delap | 7.Seasonal |
| 2.O-Built | 5.Bsmt | 8. |
| 3.Fire | 6.2014 ADJ | 9.None |

| Econ. % Good |
|---|

| Economic Code | | |
|---|---|---|
| 0.None | 3.No Power | 7. |
| 1.Location | 4.Generate | 8. |
| 2.Encroach | 9.None | 9. |

| Entrance Code **0** | | |
|---|---|---|
| 1.Interior | 4.Vacant | 7. |
| 2.Refusal | 5.Estimate | 8. |
| 3.Informed | 6. | 9. |

| Information Code **0** | | |
|---|---|---|
| 1.Owner | 4.Agent | 7. |
| 2.Relative | 5.Estimate | 8. |
| 3.Tenant | 6.Other | 9. |

Date Inspected

## Additions, Outbuildings & Improvements

| Type | Year | Units | Grade | Cond | Phys. | Funct. | Sound Value |
|---|---|---|---|---|---|---|---|
| | | | | | % | % | |
| | | | | | % | % | |
| | | | | | % | % | |
| | | | | | % | % | |
| | | | | | % | % | |
| | | | | | % | % | |
| | | | | | % | % | |
| | | | | | % | % | |
| | | | | | % | % | |
| | | | | | % | % | |

1.One Story Fram
2.Two Story Fram
3.Three Story Fr
4.1 & 1/2 Story
5.1 & 3/4 Story
6.2 & 1/2 Story
21.Open Frame Por
22.Encl Frame Por
23.Frame Garage
24.Frame Shed
25.Frame Bay Wind
26.1SFr Overhang
27.Unfin Basement
28.Unfinished Att
29.Finished Attic

Map Lot 111-002-1 Account 2119 Location EASTSIDE ROAD Card 1 Of 1 10/01/2020

CRABTREE NECK LAND TRUST
PO BOX 273
HANCOCK ME 04640

B4718P337 B5229P51

Previous Owner
PATRICK, WILLIAM GM
202 LORRAINE AVENUE

MONTCLAIR NJ 07043
Sale Date: 6/15/2009

Inspection Witnessed By:

X Date

| No./Date | Description | Date Insp. |
|---|---|---|
| | | |
| | | |
| | | |

Notes:

**Hancock 2020**

## Property Data

Neighborhood **18 Neighborhood 18**

Tree Growth Year **0**

TREE GROWTH RECERTIFY **0**

STATE SALE CODE **0**

Zone/Land Use **11 Residential**

Secondary Zone

Topography **2 Rolling**

| | | |
|---|---|---|
| 1.Level | 4.Below St | 7. |
| 2.Rolling | 5.Low | 8. |
| 3.Above St | 6.Swampy | 9. |

Utilities

| | | |
|---|---|---|
| 1.Public | 4.Dr Well | 7.Cesspool |
| 2.Water | 5.Dug Well | 8. |
| 3.Sewer | 6.Septic | 9.None |

Street **1 Paved**

| | | |
|---|---|---|
| 1.Paved | 4.Proposed | 7. |
| 2.Semi Imp | 5. | 8. |
| 3.Gravel | 6. | 9.None |

REVIEW STRUCTURE YEAR **0**

RENTAL? 0=NO 1=YES **0**

## Sale Data

Sale Date **6/15/2009**

Price **9,000**

Sale Type **1 Land Only**

| | | |
|---|---|---|
| 1.Land | 4.Mobile | 7. |
| 2.L & B | 5.Other | 8. |
| 3.Building | 6. | 9. |

Financing **9 Unknown**

| | | |
|---|---|---|
| 1.Convent | 4.Seller | 7. |
| 2.FHA/VA | 5.Private | 8. |
| 3.Assumed | 6.Cash | 9.Unknown |

Validity **4 Split/Assemblage**

| | | |
|---|---|---|
| 1.Valid | 4.Split | 7.Changes |
| 2.Related | 5.Partial | 8.Other |
| 3.Distress | 6.Exempt | 9.Fr Ffclse |

Verified **5 Public Record**

| | | |
|---|---|---|
| 1.Buyer | 4.Agent | 7.Family |
| 2.Seller | 5.Pub Rec | 8.Other |
| 3.Lender | 6.MLS | 9. |

## Assessment Record

| Year | Land | Buildings | Exempt | Total |
|---|---|---|---|---|
| 2009 | 43,400 | 0 | 0 | 43,400 |
| 2010 | 43,400 | 0 | 0 | 43,400 |
| 2011 | 43,400 | 0 | 43,400 | 0 |
| 2012 | 43,400 | 0 | 43,400 | 0 |
| 2013 | 43,400 | 0 | 43,400 | 0 |
| 2014 | 43,400 | 0 | 43,400 | 0 |
| 2015 | 43,400 | 0 | 43,400 | 0 |
| 2016 | 43,400 | 0 | 43,400 | 0 |
| 2017 | 43,400 | 0 | 43,400 | 0 |
| 2018 | 43,400 | 0 | 43,400 | 0 |
| 2019 | 43,400 | 0 | 43,400 | 0 |
| 2020 | 43,400 | 0 | 43,400 | 0 |

## Land Data

| Front Foot | Type | Effective Frontage | Effective Depth | Influence Factor | Influence Code |
|---|---|---|---|---|---|
| 11.Regular Lot | | | | % | |
| 12.Delta Triangle | | | | % | |
| 13.Nabla Triangle | | | | % | |
| 14.Rear Land | | | | % | |
| 15.Miscellaneous | | | | % | |
| | | | | % | |
| | | | | % | |
| **Square Foot** | | **Square Feet** | | | |
| 16.Regular Lot | | | | % | |
| 17.Secondary Lot | | | | % | |
| 18.Excess Land | | | | % | |
| 19.Condominium | | | | % | |
| 20.Miscellaneous | | | | % | |
| | | | | % | |
| | | | | % | |
| **Fract. Acre** | | **Acreage/Sites** | | | |
| 21.Homesite (Frac | 21 | 1.00 | | 100 % | 0 |
| 22.Baselot (Fract | 24 | 2.80 | | 100 % | 0 |
| 23.Misc (Fract) | | | | % | |
| **Acres** | | | | % | |
| 24.Excess Acres 1 | | | | % | |
| 25.Excess Acres 5 | | | | % | |
| 26.Excess Acres 2 | | | | % | |
| 27.Excess Acres 5 | | | | % | |
| 28.Excess Acres 1 | | | | % | |
| 29.Excess acres | | | | % | |

**Total Acreage** 3.80

**Influence Codes**

1.Unimproved
2.Excess Frtg
3.Topography
4.Size/Shape
5.Access
6.Restriction
7.Corner Infl
8.Environment
9.Fract Share
**Acres**
30.Industrial Sit
31.Working Waterf
32.Cultivated Cro
33.Pasture
34.Softwood (Farm
35.Mixed Wood (Fa
36.Hardwood (Farm
37.Softwood
38.Mixed Wood
39.Hardwood
40.Wasteland
41.Gravel Pit
42.Mobile Home Si
43.Location Base
44.Lot Improvemen
45.Waterfront A
46.Lobster Pound

# Hancock 2020

Map Lot 111-002-1 | Account 2119 | Location EASTSIDE ROAD | Card 1 Of 1 | 10/01/2020

| Building Style | | |
|---|---|---|
| 0.Uncoded | 4.Cape | 8.Log |
| 1.Conv. | 5.Garrison | 9.Other |
| 2.Ranch | 6.Colonial | 10.Dutch C |
| 3.R Ranch | 7.Contemp | 11.Farmhou |

| Dwelling Units |
|---|
| Other Units |

| Stories | | |
|---|---|---|
| 1.1 | 4.1.5 | 7.3.5 |
| 2.2 | 5.1.75 | 8. |
| 3.3 | 6.2.5 | 9. |

| Exterior Walls | | |
|---|---|---|
| 0.Uncoded | 4.Asbestos | 8.Stone |
| 1.Wood | 5.Stucco | 9.Other |
| 2.Vin/Al | 6.Brick Ve | 10.Concret |
| 3.Compos. | 7.Solid Br | 12. |

| Roof Surface | | |
|---|---|---|
| 1.Asphalt | 4.Composit | 7. |
| 2.Slate | 5.Wood | 8. |
| 3.Metal | 6.Other | 9. |

| SF Masonry Trim |
|---|
| OPEN-3-CUSTOM |
| OPEN-4-CUSTOM |
| Year Built |
| Year Remodeled |

| Foundation | | |
|---|---|---|
| 1.Concrete | 4.Wood | 7. |
| 2.C Block | 5.Slab | 8. |
| 3.Br/Stone | 6.Piers | 9. |

| Basement | | |
|---|---|---|
| 1.1/4 Bmt | 4.Full Bmt | 7. |
| 2.1/2 Bmt | 5.None | 8. |
| 3.3/4 Bmt | 6. | 9.None |

| Bsmt Gar # Cars |
|---|

| Wet Basement | | |
|---|---|---|
| 1.Dry | 4. | 7. |
| 2.Damp | 5. | 8. |
| 3.Wet | 6. | 9. |

| SF Bsmt Living |
|---|
| Fin Bsmt Grade |
| OPEN-5-CUSTOMIZE |

| Heat Type **100%** | | |
|---|---|---|
| 0.Uncoded | 4.Steam | 8.Fl/Wall |
| 1.HWBB | 5.FWA | 9.No Heat |
| 2.HWCI | 6.GravWA | 10.Radiabt |
| 3.H Pump | 7.Electric | 12. |

| Cool Type **100%** | | |
|---|---|---|
| 1.Refrig | 4.W&C Air | 7. |
| 2.Evapor | 5. | 8. |
| 3.H Pump | 6. | 9.None |

| Kitchen Style | | |
|---|---|---|
| 1.Modern | 4.Obsolete | 7. |
| 2.Typical | 5. | 8. |
| 3.Old Type | 6. | 9.None |

| Bath(s) Style | | |
|---|---|---|
| 1.Modern | 4.Obsolete | 7. |
| 2.Typical | 5. | 8. |
| 3.Old Type | 6. | 9.None |

| # Rooms |
|---|
| # Bedrooms |
| # Full Baths |
| # Half Baths |
| # Addn Fixtures |
| # Fireplaces |

TRIO Software
A Division of Harris Computer Systems

| Layout | | |
|---|---|---|
| 1.Typical | 4. | 7. |
| 2.Inadeq | 5. | 8. |
| 3.Horrid | 6. | 9. |

| Attic | | |
|---|---|---|
| 1.1/4 Fin | 4.Full Fin | 7. |
| 2.1/2 Fin | 5.Fl/Stair | 8. |
| 3.3/4 Fin | 6. | 9.None |

| Insulation | | |
|---|---|---|
| 1.Full | 4.Minimal | 7. |
| 2.Heavy | 5.Partial | 8. |
| 3.Capped | 6. | 9.None |

| Unfinished % |
|---|

| Grade & Factor | | |
|---|---|---|
| 1.E Grade | 4.B Grade | 7.AAA Grad |
| 2.D Grade | 5.A Grade | 8.SC Grade |
| 3.C Grade | 6.AA Grade | 9.Same |

| SQFT (Footprint) |
|---|

| Condition | | |
|---|---|---|
| 1.Poor | 4.Avg | 7.V G |
| 2.Fair | 5.Avg+ | 8.Exc |
| 3.Avg- | 6.Good | 9.Same |

| Phys. % Good |
|---|
| Funct. % Good |

| Functional Code | | |
|---|---|---|
| 1.Incomp | 4.Delap | 7.Seasonal |
| 2.O-Built | 5.Bsmt | 8. |
| 3.Fire | 6.2014 ADJ | 9.None |

| Econ. % Good |
|---|

| Economic Code | | |
|---|---|---|
| 0.None | 3.No Power | 7. |
| 1.Location | 4.Generate | 8. |
| 2.Encroach | 9.None | 9. |

| Entrance Code **0** | | |
|---|---|---|
| 1.Interior | 4.Vacant | 7. |
| 2.Refusal | 5.Estimate | 8. |
| 3.Informed | 6. | 9. |

| Information Code **0** | | |
|---|---|---|
| 1.Owner | 4.Agent | 7. |
| 2.Relative | 5.Estimate | 8. |
| 3.Tenant | 6.Other | 9. |

Date Inspected

## Additions, Outbuildings & Improvements

| Type | Year | Units | Grade | Cond | Phys. | Funct. | Sound Value |
|---|---|---|---|---|---|---|---|
| | | | | | % | % | |
| | | | | | % | % | |
| | | | | | % | % | |
| | | | | | % | % | |
| | | | | | % | % | |
| | | | | | % | % | |
| | | | | | % | % | |
| | | | | | % | % | |
| | | | | | % | % | |
| | | | | | % | % | |

1.One Story Fram
2.Two Story Fram
3.Three Story Fr
4.1 & 1/2 Story
5.1 & 3/4 Story
6.2 & 1/2 Story
21.Open Frame Por
22.Encl Frame Por
23.Frame Garage
24.Frame Shed
25.Frame Bay Wind
26.1SFr Overhang
27.Unfin Basement
28.Unfinished Att
29.Finished Attic

Map Lot 111-003 Account 620 Location 585 EASTSIDE ROAD Card 1 Of 1 10/01/2020

KOBY, JAMES
585 EASTSIDE ROAD
HANCOCK ME 04640

B4017P221 B5679P81 B6859P37

Previous Owner
BECQUE, SUZANNE H.
585 EAST SIDE ROAD

HANCOCK ME 04640
Sale Date: 11/09/2017

Previous Owner
BECQUE, SUZANNE H.
16 COTTAGE ROAD

HANCOCK ME 04640
Sale Date: 11/09/2017

Previous Owner
BECQUE, BRUCE C.
BECQUE, SUZANNE H.
585 EAST SIDE ROAD
HANCOCK ME 04640
Sale Date: 9/18/2006

Inspection Witnessed By:

X Date

| No./Date | Description | Date Insp. |
|---|---|---|
| | | |
| | | |
| | | |

Notes:

SOLD TO WENDY A. PITMAN AND JOYCE M. BECKLEY ON 10/28.02 B3439 P251 ADDRESS: 4 PLEASANT ROAD, WINDHAM ME 04062

**Hancock 2020**

## Property Data

Neighborhood **18 Neighborhood 18**

Tree Growth Year **0**

TREE GROWTH RECERTIFY **0**

STATE SALE CODE **0**

Zone/Land Use **11 Residential**

Secondary Zone

Topography **9** **9**

1.Level 4.Below St 7.
2.Rolling 5.Low 8.
3.Above St 6.Swampy 9.

Utilities **9 None** **9 None**

1.Public 4.Dr Well 7.Cesspool
2.Water 5.Dug Well 8.
3.Sewer 6.Septic 9.None

Street **9 None**

1.Paved 4.Proposed 7.
2.Semi Imp 5. 8.
3.Gravel 6. 9.None

REVIEW STRUCTURE YEAR **0**

RENTAL? 0=NO 1=YES **0**

## Sale Data

Sale Date **11/09/2017**

Price **209,000**

Sale Type **2 Land & Buildings**

1.Land 4.Mobile 7.
2.L & B 5.Other 8.
3.Building 6. 9.

Financing **9 Unknown**

1.Convent 4.Seller 7.
2.FHA/VA 5.Private 8.
3.Assumed 6.Cash 9.Unknown

Validity **1 Arms Length Sale**

1.Valid 4.Split 7.Changes
2.Related 5.Partial 8.Other
3.Distress 6.Exempt 9.Fr Ffclse

Verified **5 Public Record**

1.Buyer 4.Agent 7.Family
2.Seller 5.Pub Rec 8.Other
3.Lender 6.MLS 9.

## Assessment Record

| Year | Land | Buildings | Exempt | Total |
|---|---|---|---|---|
| 2007 | 84,100 | 256,700 | 0 | 340,800 |
| 2008 | 84,100 | 256,700 | 0 | 340,800 |
| 2009 | 57,200 | 144,800 | 13,000 | 189,000 |
| 2010 | 57,200 | 144,800 | 10,000 | 192,000 |
| 2011 | 57,200 | 144,800 | 10,000 | 192,000 |
| 2012 | 72,200 | 250,900 | 10,000 | 313,100 |
| 2013 | 72,200 | 255,000 | 10,000 | 317,200 |
| 2014 | 72,200 | 260,800 | 10,800 | 322,200 |
| 2015 | 72,200 | 260,800 | 11,000 | 322,000 |
| 2016 | 72,200 | 260,800 | 16,500 | 316,500 |
| 2017 | 72,200 | 260,800 | 22,000 | 311,000 |
| 2018 | 55,200 | 150,600 | 0 | 205,800 |
| 2019 | 55,200 | 150,600 | 0 | 205,800 |
| 2020 | 55,200 | 150,600 | 0 | 205,800 |

## Land Data

| Front Foot | Type | Effective Frontage | Effective Depth | Influence Factor | Influence Code |
|---|---|---|---|---|---|
| 11.Regular Lot | | | | % | |
| 12.Delta Triangle | | | | % | |
| 13.Nabla Triangle | | | | % | |
| 14.Rear Land | | | | % | |
| 15.Miscellaneous | | | | % | |
| | | | | % | |
| | | | | % | |
| **Square Foot** | | **Square Feet** | | | |
| 16.Regular Lot | | | | % | |
| 17.Secondary Lot | | | | % | |
| 18.Excess Land | | | | % | |
| 19.Condominium | | | | % | |
| 20.Miscellaneous | | | | % | |
| | | | | % | |
| | | | | % | |
| **Fract. Acre** | | **Acreage/Sites** | | | |
| 21.Homesite (Frac | 21 | 1.00 | 100 | % | 0 |
| 22.Baselot (Fract | 24 | 0.15 | 100 | % | 0 |
| 23.Misc (Fract) | 44 | 1.00 | 100 | % | 0 |
| **Acres** | | | | % | |
| 24.Excess Acres 1 | | | | % | |
| 25.Excess Acres 5 | | | | % | |
| 26.Excess Acres 2 | | | | % | |
| 27.Excess Acres 5 | | | | % | |
| 28.Excess Acres 1 | | | | % | |
| 29.Excess acres | | | | % | |

**Total Acreage** 1.15

### Influence Codes

1.Unimproved
2.Excess Frtg
3.Topography
4.Size/Shape
5.Access
6.Restriction
7.Corner Infl
8.Environment
9.Fract Share
**Acres**
30.Industrial Sit
31.Working Waterf
32.Cultivated Cro
33.Pasture
34.Softwood (Farm
35.Mixed Wood (Fa
36.Hardwood (Farm
37.Softwood
38.Mixed Wood
39.Hardwood
40.Wasteland
41.Gravel Pit
42.Mobile Home Si
43.Location Base
44.Lot Improvemen
45.Waterfront A
46.Lobster Pound

# Hancock 2020

Map Lot 111-003 | Account 620 | Location 585 EASTSIDE ROAD | Card 1 Of 1 | 10/01/2020

| | | | |
|---|---|---|---|
| Building Style | **1 Conventional** | | |
| 0.Uncoded | 4.Cape | 8.Log | |
| 1.Conv. | 5.Garrison | 9.Other | |
| 2.Ranch | 6.Colonial | 10.Dutch C | |
| 3.R Ranch | 7.Contemp | 11.Farmhou | |
| Dwelling Units | **1** | | |
| Other Units | **0** | | |
| Stories | **2 Two Story** | | |
| 1.1 | 4.1.5 | 7.3.5 | |
| 2.2 | 5.1.75 | 8. | |
| 3.3 | 6.2.5 | 9. | |
| Exterior Walls | **1 Wood Siding** | | |
| 0.Uncoded | 4.Asbestos | 8.Stone | |
| 1.Wood | 5.Stucco | 9.Other | |
| 2.Vin/Al | 6.Brick Ve | 10.Concret | |
| 3.Compos. | 7.Solid Br | 12. | |
| Roof Surface | **1 Asphalt Shingles** | | |
| 1.Asphalt | 4.Composit | 7. | |
| 2.Slate | 5.Wood | 8. | |
| 3.Metal | 6.Other | 9. | |
| SF Masonry Trim | **0** | | |
| OPEN-3-CUSTOM | **0** | | |
| OPEN-4-CUSTOM | **0** | | |
| Year Built | **1880** | | |
| Year Remodeled | **0** | | |
| Foundation | **3 Brick &/or Stone** | | |
| 1.Concrete | 4.Wood | 7. | |
| 2.C Block | 5.Slab | 8. | |
| 3.Br/Stone | 6.Piers | 9. | |
| Basement | **4 Full Basement** | | |
| 1.1/4 Bmt | 4.Full Bmt | 7. | |
| 2.1/2 Bmt | 5.None | 8. | |
| 3.3/4 Bmt | 6. | 9.None | |
| Bsmt Gar # Cars | **0** | | |
| Wet Basement | **2 Damp Basement** | | |
| 1.Dry | 4. | 7. | |
| 2.Damp | 5. | 8. | |
| 3.Wet | 6. | 9. | |

| | | | |
|---|---|---|---|
| SF Bsmt Living | **0** | | |
| Fin Bsmt Grade | **0 0** | | |
| OPEN-5-CUSTOMIZE | **0** | | |
| Heat Type | **100%** | **1 Hot Water BB** | |
| 0.Uncoded | 4.Steam | 8.Fl/Wall | |
| 1.HWBB | 5.FWA | 9.No Heat | |
| 2.HWCI | 6.GravWA | 10.Radiabt | |
| 3.H Pump | 7.Electric | 12. | |
| Cool Type | **100%** | **9 None** | |
| 1.Refrig | 4.W&C Air | 7. | |
| 2.Evapor | 5. | 8. | |
| 3.H Pump | 6. | 9.None | |
| Kitchen Style | **2 Typical** | | |
| 1.Modern | 4.Obsolete | 7. | |
| 2.Typical | 5. | 8. | |
| 3.Old Type | 6. | 9.None | |
| Bath(s) Style | **2 Typical Bath(s)** | | |
| 1.Modern | 4.Obsolete | 7. | |
| 2.Typical | 5. | 8. | |
| 3.Old Type | 6. | 9.None | |
| # Rooms | **9** | | |
| # Bedrooms | **4** | | |
| # Full Baths | **2** | | |
| # Half Baths | **0** | | |
| # Addn Fixtures | **0** | | |
| # Fireplaces | **0** | | |

TRIO Software
A Division of Harris Computer Systems

| | | | |
|---|---|---|---|
| Layout | **1 Typical** | | |
| 1.Typical | 4. | 7. | |
| 2.Inadeq | 5. | 8. | |
| 3.Horrid | 6. | 9. | |
| Attic | **9 None** | | |
| 1.1/4 Fin | 4.Full Fin | 7. | |
| 2.1/2 Fin | 5.Fl/Stair | 8. | |
| 3.3/4 Fin | 6. | 9.None | |
| Insulation | **1 Full** | | |
| 1.Full | 4.Minimal | 7. | |
| 2.Heavy | 5.Partial | 8. | |
| 3.Capped | 6. | 9.None | |
| Unfinished % | **0%** | | |
| Grade & Factor | **3 Average 100%** | | |
| 1.E Grade | 4.B Grade | 7.AAA Grad | |
| 2.D Grade | 5.A Grade | 8.SC Grade | |
| 3.C Grade | 6.AA Grade | 9.Same | |
| SQFT (Footprint) | **936** | | |
| Condition | **5 Above Average** | | |
| 1.Poor | 4.Avg | 7.V G | |
| 2.Fair | 5.Avg+ | 8.Exc | |
| 3.Avg- | 6.Good | 9.Same | |
| Phys. % Good | **0%** | | |
| Funct. % Good | **100%** | | |
| Functional Code | **9 None** | | |
| 1.Incomp | 4.Delap | 7.Seasonal | |
| 2.O-Built | 5.Bsmt | 8. | |
| 3.Fire | 6.2014 ADJ | 9.None | |
| Econ. % Good | **100%** | | |
| Economic Code | **None** | | |
| 0.None | 3.No Power | 7. | |
| 1.Location | 4.Generate | 8. | |
| 2.Encroach | 9.None | 9. | |
| Entrance Code | **0** | | |
| 1.Interior | 4.Vacant | 7. | |
| 2.Refusal | 5.Estimate | 8. | |
| 3.Informed | 6. | 9. | |
| Information Code | **0** | | |
| 1.Owner | 4.Agent | 7. | |
| 2.Relative | 5.Estimate | 8. | |
| 3.Tenant | 6.Other | 9. | |

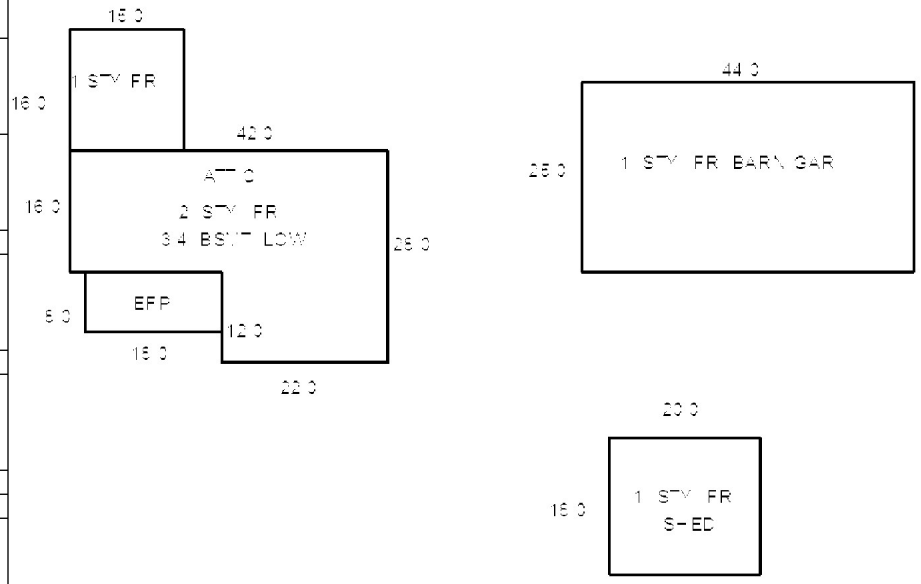

Date Inspected

## Additions, Outbuildings & Improvements

| Type | Year | Units | Grade | Cond | Phys. | Funct. | Sound Value |
|---|---|---|---|---|---|---|---|
| 81 1 SF GARAGE | 0 | 1100 | 0 0 | 0 | 0 % | 0 % | |
| 24 Frame Shed | 1980 | 360 | 0 0 | 0 | 0 % | 0 % | |
| 1 One Story Frame | 0 | 240 | 0 0 | 0 | 0 % | 0 % | |
| 21 Open Frame | 0 | 144 | 0 0 | 0 | 0 % | 0 % | |
| 67 Barn | 0 | 1100 | 0 0 | 3 | 0 % | 100 % | |
| | | | | | % | % | |
| | | | | | % | % | |
| | | | | | % | % | |
| | | | | | % | % | |
| | | | | | % | % | |

1.One Story Fram
2.Two Story Fram
3.Three Story Fr
4.1 & 1/2 Story
5.1 & 3/4 Story
6.2 & 1/2 Story
21.Open Frame Por
22.Encl Frame Por
23.Frame Garage
24.Frame Shed
25.Frame Bay Wind
26.1SFr Overhang
27.Unfin Basement
28.Unfinished Att
29.Finished Attic

Map Lot 111-003-001 Account 2124 Location 21 COTTAGE ROAD Card 1 Of 2 10/01/2020

BECQUE, SUZANNE H
16 COTTAGE ROAD
HANCOCK ME 04640

B4589P335 B5693P301 B6887P796

Previous Owner
BECQUE, SUZANNE H. (J/T)
BECQUE, ELIEN (J/T)
585 EASTSIDE ROAD
HANCOCK ME 04640
Sale Date: 5/09/2018

Inspection Witnessed By:

X Date

| No./Date | Description | Date Insp. |
|---|---|---|
| | | |
| | | |
| | | |

Notes:

## Property Data

Neighborhood **18 Neighborhood 18**

Tree Growth Year **0**

TREE GROWTH RECERTIFY **0**

STATE SALE CODE **0**

Zone/Land Use **11 Residential**

Secondary Zone

Topography **9** **9**

1.Level 4.Below St 7.
2.Rolling 5.Low 8.
3.Above St 6.Swampy 9.

Utilities **9 None** **9 None**

1.Public 4.Dr Well 7.Cesspool
2.Water 5.Dug Well 8.
3.Sewer 6.Septic 9.None

Street **9 None**

1.Paved 4.Proposed 7.
2.Semi Imp 5. 8.
3.Gravel 6. 9.None

REVIEW STRUCTURE YEAR **0**

RENTAL? 0=NO 1=YES **0**

## Sale Data

Sale Date **5/09/2018**

Price

Sale Type **2 Land & Buildings**

1.Land 4.Mobile 7.
2.L & B 5.Other 8.
3.Building 6. 9.

Financing **1 Conventional**

1.Convent 4.Seller 7.
2.FHA/VA 5.Private 8.
3.Assumed 6.Cash 9.Unknown

Validity **2 Related Parties**

1.Valid 4.Split 7.Changes
2.Related 5.Partial 8.Other
3.Distress 6.Exempt 9.Fr Ffclse

Verified **1 Buyer**

1.Buyer 4.Agent 7.Family
2.Seller 5.Pub Rec 8.Other
3.Lender 6.MLS 9.

## Assessment Record

| Year | Land | Buildings | Exempt | Total |
|---|---|---|---|---|
| 2009 | 69,700 | 111,900 | 13,000 | 168,600 |
| 2010 | 69,700 | 111,900 | 0 | 181,600 |
| 2011 | 69,700 | 125,900 | 0 | 195,600 |
| 2012 | 69,700 | 63,000 | 0 | 132,700 |
| 2013 | 69,700 | 127,600 | 0 | 197,300 |
| 2014 | 52,700 | 63,000 | 0 | 115,700 |
| 2015 | 52,700 | 63,000 | 0 | 115,700 |
| 2016 | 52,700 | 63,000 | 0 | 115,700 |
| 2017 | 52,700 | 63,000 | 0 | 115,700 |
| 2018 | 52,700 | 63,000 | 0 | 115,700 |
| 2019 | 52,700 | 63,000 | 0 | 115,700 |
| 2020 | 52,700 | 63,000 | 0 | 115,700 |

## Land Data

| Front Foot | Type | Effective Frontage | Effective Depth | Influence Factor | Influence Code |
|---|---|---|---|---|---|
| 11.Regular Lot | | | | % | |
| 12.Delta Triangle | | | | % | |
| 13.Nabla Triangle | | | | % | |
| 14.Rear Land | | | | % | |
| 15.Miscellaneous | | | | % | |
| | | | | % | |
| | | | | % | |
| **Square Foot** | | **Square Feet** | | | |
| 16.Regular Lot | | | | % | |
| 17.Secondary Lot | | | | % | |
| 18.Excess Land | | | | % | |
| 19.Condominium | | | | % | |
| 20.Miscellaneous | | | | % | |
| | | | | % | |
| | | | | % | |
| **Fract. Acre** | | **Acreage/Sites** | | | |
| 21.Homesite (Frac | 44 | 1.00 | 60 | % | 0 |
| 22.Baselot (Fract | 21 | 1.00 | 100 | % | 0 |
| 23.Misc (Fract) | 24 | 3.10 | 100 | % | 0 |
| **Acres** | | | | % | |
| 24.Excess Acres 1 | | | | % | |
| 25.Excess Acres 5 | | | | % | |
| 26.Excess Acres 2 | | | | % | |
| 27.Excess Acres 5 | | | | % | |
| 28.Excess Acres 1 | | | | % | |
| 29.Excess acres | | | | % | |

**Total Acreage** 4.10

### Influence Codes

1.Unimproved
2.Excess Frtg
3.Topography
4.Size/Shape
5.Access
6.Restriction
7.Corner Infl
8.Environment
9.Fract Share
**Acres**
30.Industrial Sit
31.Working Waterf
32.Cultivated Cro
33.Pasture
34.Softwood (Farm
35.Mixed Wood (Fa
36.Hardwood (Farm
37.Softwood
38.Mixed Wood
39.Hardwood
40.Wasteland
41.Gravel Pit
42.Mobile Home Si
43.Location Base
44.Lot Improvemen
45.Waterfront A
46.Lobster Pound

**Hancock 2020**

# Hancock 2020

Map Lot 111-003-001 | Account 2124 | Location 21 COTTAGE ROAD | Card 1 Of 2 | 10/01/2020

| | | |
|---|---|---|
| Building Style **9 Other** | | |
| 0.Uncoded | 4.Cape | 8.Log |
| 1.Conv. | 5.Garrison | 9.Other |
| 2.Ranch | 6.Colonial | 10.Dutch C |
| 3.R Ranch | 7.Contemp | 11.Farmhou |
| Dwelling Units **1** | | |
| Other Units **0** | | |
| Stories **4 One & 1/2 Story** | | |
| 1.1 | 4.1.5 | 7.3.5 |
| 2.2 | 5.1.75 | 8. |
| 3.3 | 6.2.5 | 9. |
| Exterior Walls **1 Wood Siding** | | |
| 0.Uncoded | 4.Asbestos | 8.Stone |
| 1.Wood | 5.Stucco | 9.Other |
| 2.Vin/Al | 6.Brick Ve | 10.Concret |
| 3.Compos. | 7.Solid Br | 12. |
| Roof Surface **1 Asphalt Shingles** | | |
| 1.Asphalt | 4.Composit | 7. |
| 2.Slate | 5.Wood | 8. |
| 3.Metal | 6.Other | 9. |
| SF Masonry Trim **0** | | |
| OPEN-3-CUSTOM **0** | | |
| OPEN-4-CUSTOM **0** | | |
| Year Built **2006** | | |
| Year Remodeled **0** | | |
| Foundation **6 Piers** | | |
| 1.Concrete | 4.Wood | 7. |
| 2.C Block | 5.Slab | 8. |
| 3.Br/Stone | 6.Piers | 9. |
| Basement **9 No Basement** | | |
| 1.1/4 Bmt | 4.Full Bmt | 7. |
| 2.1/2 Bmt | 5.None | 8. |
| 3.3/4 Bmt | 6. | 9.None |
| Bsmt Gar # Cars **0** | | |
| Wet Basement **9 No Basement** | | |
| 1.Dry | 4. | 7. |
| 2.Damp | 5. | 8. |
| 3.Wet | 6. | 9. |

| | | |
|---|---|---|
| SF Bsmt Living **0** | | |
| Fin Bsmt Grade **0 0** | | |
| OPEN-5-CUSTOMIZE **0** | | |
| Heat Type **100% 6 Floor Furnace/Pipeless Furnace** | | |
| 0.Uncoded | 4.Steam | 8.Fl/Wall |
| 1.HWBB | 5.FWA | 9.No Heat |
| 2.HWCI | 6.GravWA | 10.Radiabt |
| 3.H Pump | 7.Electric | 12. |
| Cool Type **100% 9 None** | | |
| 1.Refrig | 4.W&C Air | 7. |
| 2.Evapor | 5. | 8. |
| 3.H Pump | 6. | 9.None |
| Kitchen Style **2 Typical** | | |
| 1.Modern | 4.Obsolete | 7. |
| 2.Typical | 5. | 8. |
| 3.Old Type | 6. | 9.None |
| Bath(s) Style **2 Typical Bath(s)** | | |
| 1.Modern | 4.Obsolete | 7. |
| 2.Typical | 5. | 8. |
| 3.Old Type | 6. | 9.None |
| # Rooms **5** | | |
| # Bedrooms **2** | | |
| # Full Baths **1** | | |
| # Half Baths **0** | | |
| # Addn Fixtures **0** | | |
| # Fireplaces **0** | | |

TRIO Software
A Division of Harris Computer Systems

| | | |
|---|---|---|
| Layout **1 Typical** | | |
| 1.Typical | 4. | 7. |
| 2.Inadeq | 5. | 8. |
| 3.Horrid | 6. | 9. |
| Attic **9 None** | | |
| 1.1/4 Fin | 4.Full Fin | 7. |
| 2.1/2 Fin | 5.Fl/Stair | 8. |
| 3.3/4 Fin | 6. | 9.None |
| Insulation **9 None** | | |
| 1.Full | 4.Minimal | 7. |
| 2.Heavy | 5.Partial | 8. |
| 3.Capped | 6. | 9.None |
| Unfinished % **0%** | | |
| Grade & Factor **2 Fair 100%** | | |
| 1.E Grade | 4.B Grade | 7.AAA Grad |
| 2.D Grade | 5.A Grade | 8.SC Grade |
| 3.C Grade | 6.AA Grade | 9.Same |
| SQFT (Footprint) **560** | | |
| Condition **4 Average** | | |
| 1.Poor | 4.Avg | 7.V G |
| 2.Fair | 5.Avg+ | 8.Exc |
| 3.Avg- | 6.Good | 9.Same |
| Phys. % Good **0%** | | |
| Funct. % Good **100%** | | |
| Functional Code **9 None** | | |
| 1.Incomp | 4.Delap | 7.Seasonal |
| 2.O-Built | 5.Bsmt | 8. |
| 3.Fire | 6.2014 ADJ | 9.None |
| Econ. % Good **100%** | | |
| Economic Code **None** | | |
| 0.None | 3.No Power | 7. |
| 1.Location | 4.Generate | 8. |
| 2.Encroach | 9.None | 9. |
| Entrance Code **0** | | |
| 1.Interior | 4.Vacant | 7. |
| 2.Refusal | 5.Estimate | 8. |
| 3.Informed | 6. | 9. |
| Information Code **0** | | |
| 1.Owner | 4.Agent | 7. |
| 2.Relative | 5.Estimate | 8. |
| 3.Tenant | 6.Other | 9. |

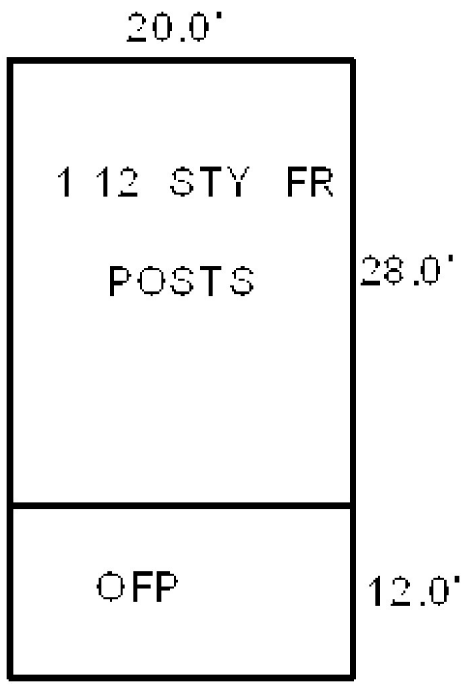

Date Inspected

## Additions, Outbuildings & Improvements

| Type | Year | Units | Grade | Cond | Phys. | Funct. | Sound Value |
|---|---|---|---|---|---|---|---|
| 21 Open Frame | 0 | 240 | 0 0 | 0 | 0 % | 0 % | |
| | | | | | % | % | |
| | | | | | % | % | |
| | | | | | % | % | |
| | | | | | % | % | |
| | | | | | % | % | |
| | | | | | % | % | |
| | | | | | % | % | |
| | | | | | % | % | |
| | | | | | % | % | |

1.One Story Fram
2.Two Story Fram
3.Three Story Fr
4.1 & 1/2 Story
5.1 & 3/4 Story
6.2 & 1/2 Story
21.Open Frame Por
22.Encl Frame Por
23.Frame Garage
24.Frame Shed
25.Frame Bay Wind
26.1SFr Overhang
27.Unfin Basement
28.Unfinished Att
29.Finished Attic

Map Lot 111-003-001 Account 2124 Location 19 COTTAGE ROAD Card 2 Of 2 10/01/2020

BECQUE, SUZANNE H
16 COTTAGE ROAD
HANCOCK ME 04640

B4589P335 B5693P301 B6887P796

Previous Owner
BECQUE, SUZANNE H. (J/T)
BECQUE, ELIEN (J/T)
585 EASTSIDE ROAD
HANCOCK ME 04640
Sale Date: 5/09/2018

Inspection Witnessed By:

X Date

| No./Date | Description | Date Insp. |
|---|---|---|
| | | |
| | | |
| | | |

Notes:

## Property Data

Neighborhood **18 Neighborhood 18**

Tree Growth Year **0**

TREE GROWTH RECERTIFY **0**

STATE SALE CODE **0**

Zone/Land Use **11 Residential**

Secondary Zone

Topography **9** **9**

1.Level 4.Below St 7.
2.Rolling 5.Low 8.
3.Above St 6.Swampy 9.

Utilities **9 None** **9 None**

1.Public 4.Dr Well 7.Cesspool
2.Water 5.Dug Well 8.
3.Sewer 6.Septic 9.None

Street **9 None**

1.Paved 4.Proposed 7.
2.Semi Imp 5. 8.
3.Gravel 6. 9.None

REVIEW STRUCTURE YEAR **0**

RENTAL? 0=NO 1=YES **0**

## Sale Data

Sale Date **5/09/2018**

Price

Sale Type **2 Land & Buildings**

1.Land 4.Mobile 7.
2.L & B 5.Other 8.
3.Building 6. 9.

Financing **1 Conventional**

1.Convent 4.Seller 7.
2.FHA/VA 5.Private 8.
3.Assumed 6.Cash 9.Unknown

Validity **2 Related Parties**

1.Valid 4.Split 7.Changes
2.Related 5.Partial 8.Other
3.Distress 6.Exempt 9.Fr Ffclse

Verified **1 Buyer**

1.Buyer 4.Agent 7.Family
2.Seller 5.Pub Rec 8.Other
3.Lender 6.MLS 9.

## Assessment Record

| Year | Land | Buildings | Exempt | Total |
|---|---|---|---|---|
| 2013 | 0 | 64,600 | 0 | 64,600 |
| 2020 | 0 | 76,300 | 0 | 76,300 |

## Land Data

| Front Foot | Type | Effective Frontage | Effective Depth | Influence Factor | Influence Code |
|---|---|---|---|---|---|
| 11.Regular Lot | | | | % | |
| 12.Delta Triangle | | | | % | |
| 13.Nabla Triangle | | | | % | |
| 14.Rear Land | | | | % | |
| 15.Miscellaneous | | | | % | |
| | | | | % | |
| | | | | % | |
| **Square Foot** | | **Square Feet** | | | |
| 16.Regular Lot | | | | % | |
| 17.Secondary Lot | | | | % | |
| 18.Excess Land | | | | % | |
| 19.Condominium | | | | % | |
| 20.Miscellaneous | | | | % | |
| | | | | % | |
| | | | | % | |
| **Fract. Acre** | | **Acreage/Sites** | | | |
| 21.Homesite (Frac | | | | % | |
| 22.Baselot (Fract | | | | % | |
| 23.Misc (Fract) | | | | % | |
| **Acres** | | | | % | |
| 24.Excess Acres 1 | | | | % | |
| 25.Excess Acres 5 | | | | % | |
| 26.Excess Acres 2 | | | | % | |
| 27.Excess Acres 5 | | | | % | |
| 28.Excess Acres 1 | | | | % | |
| 29.Excess acres | | | | % | |

**Total Acreage** 0.00

**Influence Codes**

1.Unimproved
2.Excess Frtg
3.Topography
4.Size/Shape
5.Access
6.Restriction
7.Corner Infl
8.Environment
9.Fract Share
**Acres**
30.Industrial Sit
31.Working Waterf
32.Cultivated Cro
33.Pasture
34.Softwood (Farm
35.Mixed Wood (Fa
36.Hardwood (Farm
37.Softwood
38.Mixed Wood
39.Hardwood
40.Wasteland
41.Gravel Pit
42.Mobile Home Si
43.Location Base
44.Lot Improvemen
45.Waterfront A
46.Lobster Pound

**Hancock 2020**

# Hancock 2020

Map Lot 111-003-001 | Account 2124 | Location 19 COTTAGE ROAD | Card 2 Of 2 | 10/01/2020

| | | |
|---|---|---|
| Building Style **15 Custom** | | |
| 0.Uncoded | 4.Cape | 8.Log |
| 1.Conv. | 5.Garrison | 9.Other |
| 2.Ranch | 6.Colonial | 10.Dutch C |
| 3.R Ranch | 7.Contemp | 11.Farmhou |
| Dwelling Units **1** | | |
| Other Units **0** | | |
| Stories **2 Two Story** | | |
| 1.1 | 4.1.5 | 7.3.5 |
| 2.2 | 5.1.75 | 8. |
| 3.3 | 6.2.5 | 9. |
| Exterior Walls **1 Wood Siding** | | |
| 0.Uncoded | 4.Asbestos | 8.Stone |
| 1.Wood | 5.Stucco | 9.Other |
| 2.Vin/Al | 6.Brick Ve | 10.Concret |
| 3.Compos. | 7.Solid Br | 12. |
| Roof Surface **1 Asphalt Shingles** | | |
| 1.Asphalt | 4.Composit | 7. |
| 2.Slate | 5.Wood | 8. |
| 3.Metal | 6.Other | 9. |
| SF Masonry Trim **0** | | |
| OPEN-3-CUSTOM **0** | | |
| OPEN-4-CUSTOM **0** | | |
| Year Built **2018** | | |
| Year Remodeled **0** | | |
| Foundation **5 Concrete Slab** | | |
| 1.Concrete | 4.Wood | 7. |
| 2.C Block | 5.Slab | 8. |
| 3.Br/Stone | 6.Piers | 9. |
| Basement **9 No Basement** | | |
| 1.1/4 Bmt | 4.Full Bmt | 7. |
| 2.1/2 Bmt | 5.None | 8. |
| 3.3/4 Bmt | 6. | 9.None |
| Bsmt Gar # Cars **1** | | |
| Wet Basement **9 No Basement** | | |
| 1.Dry | 4. | 7. |
| 2.Damp | 5. | 8. |
| 3.Wet | 6. | 9. |

| | | |
|---|---|---|
| SF Bsmt Living **0** | | |
| Fin Bsmt Grade **0 0** | | |
| OPEN-5-CUSTOMIZE **0** | | |
| Heat Type **100% 0 Uncoded** | | |
| 0.Uncoded | 4.Steam | 8.Fl/Wall |
| 1.HWBB | 5.FWA | 9.No Heat |
| 2.HWCI | 6.GravWA | 10.Radiabt |
| 3.H Pump | 7.Electric | 12. |
| Cool Type **0% 9 None** | | |
| 1.Refrig | 4.W&C Air | 7. |
| 2.Evapor | 5. | 8. |
| 3.H Pump | 6. | 9.None |
| Kitchen Style **2 Typical** | | |
| 1.Modern | 4.Obsolete | 7. |
| 2.Typical | 5. | 8. |
| 3.Old Type | 6. | 9.None |
| Bath(s) Style **2 Typical Bath(s)** | | |
| 1.Modern | 4.Obsolete | 7. |
| 2.Typical | 5. | 8. |
| 3.Old Type | 6. | 9.None |
| # Rooms **0** | | |
| # Bedrooms **1** | | |
| # Full Baths **1** | | |
| # Half Baths **0** | | |
| # Addn Fixtures **0** | | |
| # Fireplaces **0** | | |

TRIO Software
A Division of Harris Computer Systems

| | | |
|---|---|---|
| Layout **1 Typical** | | |
| 1.Typical | 4. | 7. |
| 2.Inadeq | 5. | 8. |
| 3.Horrid | 6. | 9. |
| Attic **0** | | |
| 1.1/4 Fin | 4.Full Fin | 7. |
| 2.1/2 Fin | 5.Fl/Stair | 8. |
| 3.3/4 Fin | 6. | 9.None |
| Insulation **1 Full** | | |
| 1.Full | 4.Minimal | 7. |
| 2.Heavy | 5.Partial | 8. |
| 3.Capped | 6. | 9.None |
| Unfinished % **0%** | | |
| Grade & Factor **3 Average 100%** | | |
| 1.E Grade | 4.B Grade | 7.AAA Grad |
| 2.D Grade | 5.A Grade | 8.SC Grade |
| 3.C Grade | 6.AA Grade | 9.Same |
| SQFT (Footprint) **416** | | |
| Condition **3 Below Average** | | |
| 1.Poor | 4.Avg | 7.V G |
| 2.Fair | 5.Avg+ | 8.Exc |
| 3.Avg- | 6.Good | 9.Same |
| Phys. % Good **0%** | | |
| Funct. % Good **90%** | | |
| Functional Code **9 None** | | |
| 1.Incomp | 4.Delap | 7.Seasonal |
| 2.O-Built | 5.Bsmt | 8. |
| 3.Fire | 6.2014 ADJ | 9.None |
| Econ. % Good **100%** | | |
| Economic Code **None** | | |
| 0.None | 3.No Power | 7. |
| 1.Location | 4.Generate | 8. |
| 2.Encroach | 9.None | 9. |
| Entrance Code **0** | | |
| 1.Interior | 4.Vacant | 7. |
| 2.Refusal | 5.Estimate | 8. |
| 3.Informed | 6. | 9. |
| Information Code **0** | | |
| 1.Owner | 4.Agent | 7. |
| 2.Relative | 5.Estimate | 8. |
| 3.Tenant | 6.Other | 9. |

Date Inspected

## Additions, Outbuildings & Improvements

| Type | Year | Units | Grade | Cond | Phys. | Funct. | Sound Value |
|---|---|---|---|---|---|---|---|
| 68 Wood Deck | 2018 | 208 | 3 100 | 3 | 100 % | 100 % | |
| | | | | | % | % | |
| | | | | | % | % | |
| | | | | | % | % | |
| | | | | | % | % | |
| | | | | | % | % | |
| | | | | | % | % | |
| | | | | | % | % | |
| | | | | | % | % | |
| | | | | | % | % | |

1.One Story Fram
2.Two Story Fram
3.Three Story Fr
4.1 & 1/2 Story
5.1 & 3/4 Story
6.2 & 1/2 Story
21.Open Frame Por
22.Encl Frame Por
23.Frame Garage
24.Frame Shed
25.Frame Bay Wind
26.1SFr Overhang
27.Unfin Basement
28.Unfinished Att
29.Finished Attic

Map Lot 111-003-002 Account 2222 Location 8 COTTAGE ROAD Card 1 Of 2 10/01/2020

BECQUE, SUZANNE H
16 COTTAGE ROAD
HANCOCK ME 04640

B4017P221 B5679P81 B6859P37 B6867P957

Previous Owner
KOBY, JAMES
168 NE CHANCELLOR COURT

HILLSBORO OR 97124
Sale Date: 11/09/2017

Inspection Witnessed By:

X Date

| No./Date | Description | Date Insp. |
|---|---|---|
| | | |
| | | |
| | | |

Notes:

## Property Data

Neighborhood **18 Neighborhood 18**

Tree Growth Year **0**

TREE GROWTH RECERTIFY **0**

STATE SALE CODE **0**

Zone/Land Use **11 Residential**

Secondary Zone

Topography **9** **9**

1.Level 4.Below St 7.
2.Rolling 5.Low 8.
3.Above St 6.Swampy 9.

Utilities

1.Public 4.Dr Well 7.Cesspool
2.Water 5.Dug Well 8.
3.Sewer 6.Septic 9.None

Street

1.Paved 4.Proposed 7.
2.Semi Imp 5. 8.
3.Gravel 6. 9.None

REVIEW STRUCTURE YEAR **0**

RENTAL? 0=NO 1=YES **0**

## Sale Data

Sale Date

Price

Sale Type

1.Land 4.Mobile 7.
2.L & B 5.Other 8.
3.Building 6. 9.

Financing

1.Convent 4.Seller 7.
2.FHA/VA 5.Private 8.
3.Assumed 6.Cash 9.Unknown

Validity

1.Valid 4.Split 7.Changes
2.Related 5.Partial 8.Other
3.Distress 6.Exempt 9.Fr Ffclse

Verified

1.Buyer 4.Agent 7.Family
2.Seller 5.Pub Rec 8.Other
3.Lender 6.MLS 9.

## Assessment Record

| Year | Land | Buildings | Exempt | Total |
|---|---|---|---|---|
| 2018 | 55,700 | 57,200 | 0 | 112,900 |
| 2019 | 55,700 | 57,200 | 0 | 112,900 |
| 2020 | 55,700 | 57,200 | 0 | 112,900 |

## Land Data

| Front Foot | Type | Effective Frontage | Effective Depth | Influence Factor | Influence Code |
|---|---|---|---|---|---|
| 11.Regular Lot | | | | % | |
| 12.Delta Triangle | | | | % | |
| 13.Nabla Triangle | | | | % | |
| 14.Rear Land | | | | % | |
| 15.Miscellaneous | | | | % | |
| | | | | % | |
| | | | | % | |
| **Square Foot** | | **Square Feet** | | | |
| 16.Regular Lot | | | | % | |
| 17.Secondary Lot | | | | % | |
| 18.Excess Land | | | | % | |
| 19.Condominium | | | | % | |
| 20.Miscellaneous | | | | % | |
| | | | | % | |
| | | | | % | |
| **Fract. Acre** | | **Acreage/Sites** | | | |
| 21.Homesite (Frac | 21 | 1.00 | 100 | % | 0 |
| 22.Baselot (Fract | 24 | 0.57 | 100 | % | 0 |
| 23.Misc (Fract) | 44 | 1.00 | 100 | % | 0 |
| **Acres** | | | | % | |
| 24.Excess Acres 1 | | | | % | |
| 25.Excess Acres 5 | | | | % | |
| 26.Excess Acres 2 | | | | % | |
| 27.Excess Acres 5 | | | | % | |
| 28.Excess Acres 1 | | | | % | |
| 29.Excess acres | | | | | |

**Total Acreage** 1.57

### Influence Codes

1.Unimproved
2.Excess Frtg
3.Topography
4.Size/Shape
5.Access
6.Restriction
7.Corner Infl
8.Environment
9.Fract Share
**Acres**
30.Industrial Sit
31.Working Waterf
32.Cultivated Cro
33.Pasture
34.Softwood (Farm
35.Mixed Wood (Fa
36.Hardwood (Farm
37.Softwood
38.Mixed Wood
39.Hardwood
40.Wasteland
41.Gravel Pit
42.Mobile Home Si
43.Location Base
44.Lot Improvemen
45.Waterfront A
46.Lobster Pound

**Hancock 2020**

# Hancock 2020

Map Lot 111-003-002 | Account 2222 | Location 8 COTTAGE ROAD | Card 1 Of 2 | 10/01/2020

| | | |
|---|---|---|
| Building Style **9 Other** | | |
| 0.Uncoded | 4.Cape | 8.Log |
| 1.Conv. | 5.Garrison | 9.Other |
| 2.Ranch | 6.Colonial | 10.Dutch C |
| 3.R Ranch | 7.Contemp | 11.Farmhou |
| Dwelling Units **1** | | |
| Other Units **0** | | |
| Stories **0** | | |
| 1.1 | 4.1.5 | 7.3.5 |
| 2.2 | 5.1.75 | 8. |
| 3.3 | 6.2.5 | 9. |
| Exterior Walls **0 Uncoded** | | |
| 0.Uncoded | 4.Asbestos | 8.Stone |
| 1.Wood | 5.Stucco | 9.Other |
| 2.Vin/Al | 6.Brick Ve | 10.Concret |
| 3.Compos. | 7.Solid Br | 12. |
| Roof Surface **4 Composition** | | |
| 1.Asphalt | 4.Composit | 7. |
| 2.Slate | 5.Wood | 8. |
| 3.Metal | 6.Other | 9. |
| SF Masonry Trim **0** | | |
| OPEN-3-CUSTOM **0** | | |
| OPEN-4-CUSTOM **0** | | |
| Year Built **2006** | | |
| Year Remodeled **0** | | |
| Foundation **6 Piers** | | |
| 1.Concrete | 4.Wood | 7. |
| 2.C Block | 5.Slab | 8. |
| 3.Br/Stone | 6.Piers | 9. |
| Basement **9 No Basement** | | |
| 1.1/4 Bmt | 4.Full Bmt | 7. |
| 2.1/2 Bmt | 5.None | 8. |
| 3.3/4 Bmt | 6. | 9.None |
| Bsmt Gar # Cars **0** | | |
| Wet Basement **9 No Basement** | | |
| 1.Dry | 4. | 7. |
| 2.Damp | 5. | 8. |
| 3.Wet | 6. | 9. |

| | | |
|---|---|---|
| SF Bsmt Living **0** | | |
| Fin Bsmt Grade **0 0** | | |
| OPEN-5-CUSTOMIZE **0** | | |
| Heat Type **100%** | **5 Forced Warm Air** | |
| 0.Uncoded | 4.Steam | 8.Fl/Wall |
| 1.HWBB | 5.FWA | 9.No Heat |
| 2.HWCI | 6.GravWA | 10.Radiabt |
| 3.H Pump | 7.Electric | 12. |
| Cool Type **0%** | **9 None** | |
| 1.Refrig | 4.W&C Air | 7. |
| 2.Evapor | 5. | 8. |
| 3.H Pump | 6. | 9.None |
| Kitchen Style | **1 Modern** | |
| 1.Modern | 4.Obsolete | 7. |
| 2.Typical | 5. | 8. |
| 3.Old Type | 6. | 9.None |
| Bath(s) Style | **1 Modern Bath(s)** | |
| 1.Modern | 4.Obsolete | 7. |
| 2.Typical | 5. | 8. |
| 3.Old Type | 6. | 9.None |
| # Rooms **5** | | |
| # Bedrooms **2** | | |
| # Full Baths **1** | | |
| # Half Baths **0** | | |
| # Addn Fixtures **0** | | |
| # Fireplaces **0** | | |

TRIO Software
A Division of Harris Computer Systems

| | | |
|---|---|---|
| Layout **1 Typical** | | |
| 1.Typical | 4. | 7. |
| 2.Inadeq | 5. | 8. |
| 3.Horrid | 6. | 9. |
| Attic **9 None** | | |
| 1.1/4 Fin | 4.Full Fin | 7. |
| 2.1/2 Fin | 5.Fl/Stair | 8. |
| 3.3/4 Fin | 6. | 9.None |
| Insulation **1 Full** | | |
| 1.Full | 4.Minimal | 7. |
| 2.Heavy | 5.Partial | 8. |
| 3.Capped | 6. | 9.None |
| Unfinished % **0%** | | |
| Grade & Factor **2 Fair 100%** | | |
| 1.E Grade | 4.B Grade | 7.AAA Grad |
| 2.D Grade | 5.A Grade | 8.SC Grade |
| 3.C Grade | 6.AA Grade | 9.Same |
| SQFT (Footprint) **560** | | |
| Condition **4 Average** | | |
| 1.Poor | 4.Avg | 7.V G |
| 2.Fair | 5.Avg+ | 8.Exc |
| 3.Avg- | 6.Good | 9.Same |
| Phys. % Good **0%** | | |
| Funct. % Good **100%** | | |
| Functional Code **9 None** | | |
| 1.Incomp | 4.Delap | 7.Seasonal |
| 2.O-Built | 5.Bsmt | 8. |
| 3.Fire | 6.2014 ADJ | 9.None |
| Econ. % Good **100%** | | |
| Economic Code **None** | | |
| 0.None | 3.No Power | 7. |
| 1.Location | 4.Generate | 8. |
| 2.Encroach | 9.None | 9. |
| Entrance Code **0** | | |
| 1.Interior | 4.Vacant | 7. |
| 2.Refusal | 5.Estimate | 8. |
| 3.Informed | 6. | 9. |
| Information Code **0** | | |
| 1.Owner | 4.Agent | 7. |
| 2.Relative | 5.Estimate | 8. |
| 3.Tenant | 6.Other | 9. |

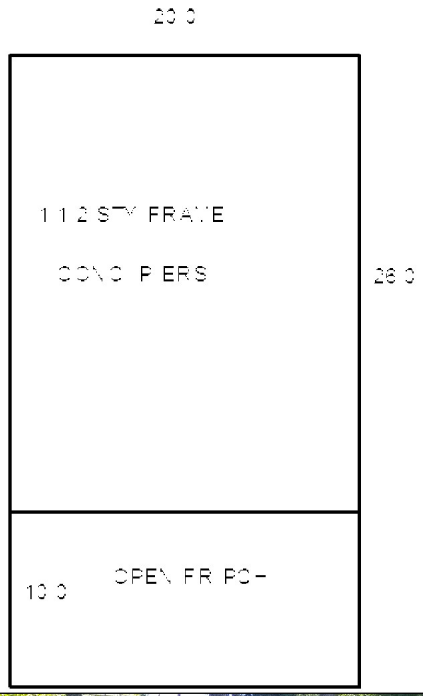

Date Inspected

## Additions, Outbuildings & Improvements

| Type | Year | Units | Grade | Cond | Phys. | Funct. | Sound Value |
|---|---|---|---|---|---|---|---|
| 21 Open Frame | 2006 | 240 | 0 0 | 0 | 0 % | 100 % | |
| 68 Wood Deck | 2017 | 36 | 0 0 | 4 | 0 % | 100 % | |
| 1 One Story Frame | 2017 | 40 | 0 0 | 4 | 0 % | 100 % | |
| 68 Wood Deck | 2017 | 6 | 0 0 | 4 | 0 % | 100 % | |
| 24 Frame Shed | 2017 | 160 | 3 100 | 4 | 0 % | 100 % | |
| | | | | | % | % | |
| | | | | | % | % | |
| | | | | | % | % | |
| | | | | | % | % | |
| | | | | | % | % | |

1.One Story Fram
2.Two Story Fram
3.Three Story Fr
4.1 & 1/2 Story
5.1 & 3/4 Story
6.2 & 1/2 Story
21.Open Frame Por
22.Encl Frame Por
23.Frame Garage
24.Frame Shed
25.Frame Bay Wind
26.1SFr Overhang
27.Unfin Basement
28.Unfinished Att
29.Finished Attic

Map Lot 111-003-002 Account 2222 Location 16 COTTAGE ROAD Card 2 Of 2 10/01/2020

BECQUE, SUZANNE H
16 COTTAGE ROAD
HANCOCK ME 04640

B4017P221 B5679P81 B6859P37 B6867P957

Previous Owner
KOBY, JAMES
168 NE CHANCELLOR COURT

HILLSBORO OR 97124
Sale Date: 11/09/2017

Inspection Witnessed By:

X Date

| No./Date | Description | Date Insp. |
|---|---|---|
| | | |
| | | |
| | | |

Notes:

## Property Data

Neighborhood **18 Neighborhood 18**

Tree Growth Year **0**

TREE GROWTH RECERTIFY **0**

STATE SALE CODE **0**

Zone/Land Use **11 Residential**

Secondary Zone

Topography **9** **9**

1.Level 4.Below St 7.
2.Rolling 5.Low 8.
3.Above St 6.Swampy 9.

Utilities

1.Public 4.Dr Well 7.Cesspool
2.Water 5.Dug Well 8.
3.Sewer 6.Septic 9.None

Street

1.Paved 4.Proposed 7.
2.Semi Imp 5. 8.
3.Gravel 6. 9.None

REVIEW STRUCTURE YEAR **0**

RENTAL? 0=NO 1=YES **0**

## Sale Data

Sale Date

Price

Sale Type

1.Land 4.Mobile 7.
2.L & B 5.Other 8.
3.Building 6. 9.

Financing

1.Convent 4.Seller 7.
2.FHA/VA 5.Private 8.
3.Assumed 6.Cash 9.Unknown

Validity

1.Valid 4.Split 7.Changes
2.Related 5.Partial 8.Other
3.Distress 6.Exempt 9.Fr Ffclse

Verified

1.Buyer 4.Agent 7.Family
2.Seller 5.Pub Rec 8.Other
3.Lender 6.MLS 9.

## Assessment Record

| Year | Land | Buildings | Exempt | Total |
|---|---|---|---|---|
| 2018 | 0 | 54,400 | 0 | 54,400 |
| 2019 | 0 | 54,400 | 0 | 54,400 |
| 2020 | 0 | 54,400 | 0 | 54,400 |

## Land Data

| Front Foot | Type | Effective Frontage | Effective Depth | Influence Factor | Influence Code |
|---|---|---|---|---|---|
| 11.Regular Lot | | | | % | |
| 12.Delta Triangle | | | | % | |
| 13.Nabla Triangle | | | | % | |
| 14.Rear Land | | | | % | |
| 15.Miscellaneous | | | | % | |
| | | | | % | |
| | | | | % | |
| **Square Foot** | | **Square Feet** | | | |
| 16.Regular Lot | | | | % | |
| 17.Secondary Lot | | | | % | |
| 18.Excess Land | | | | % | |
| 19.Condominium | | | | % | |
| 20.Miscellaneous | | | | % | |
| | | | | % | |
| | | | | % | |
| **Fract. Acre** | | **Acreage/Sites** | | | |
| 21.Homesite (Frac | | | | % | |
| 22.Baselot (Fract | | | | % | |
| 23.Misc (Fract) | | | | % | |
| **Acres** | | | | % | |
| 24.Excess Acres 1 | | | | % | |
| 25.Excess Acres 5 | | | | % | |
| 26.Excess Acres 2 | | | | % | |
| 27.Excess Acres 5 | | | | % | |
| 28.Excess Acres 1 | | | | % | |
| 29.Excess acres | | | | % | |

**Total Acreage** 0.00

**Influence Codes**

1.Unimproved
2.Excess Frtg
3.Topography
4.Size/Shape
5.Access
6.Restriction
7.Corner Infl
8.Environment
9.Fract Share
**Acres**
30.Industrial Sit
31.Working Waterf
32.Cultivated Cro
33.Pasture
34.Softwood (Farm
35.Mixed Wood (Fa
36.Hardwood (Farm
37.Softwood
38.Mixed Wood
39.Hardwood
40.Wasteland
41.Gravel Pit
42.Mobile Home Si
43.Location Base
44.Lot Improvemen
45.Waterfront A
46.Lobster Pound

**Hancock 2020**

# Hancock 2020

Map Lot 111-003-002 | Account 2222 | Location 16 COTTAGE ROAD | Card 2 Of 2 | 10/01/2020

| | | |
|---|---|---|
| Building Style **1 Conventional** | | |
| 0.Uncoded | 4.Cape | 8.Log |
| 1.Conv. | 5.Garrison | 9.Other |
| 2.Ranch | 6.Colonial | 10.Dutch C |
| 3.R Ranch | 7.Contemp | 11.Farmhou |
| Dwelling Units **1** | | |
| Other Units **0** | | |
| Stories **1 One Story** | | |
| 1.1 | 4.1.5 | 7.3.5 |
| 2.2 | 5.1.75 | 8. |
| 3.3 | 6.2.5 | 9. |
| Exterior Walls **1 Wood Siding** | | |
| 0.Uncoded | 4.Asbestos | 8.Stone |
| 1.Wood | 5.Stucco | 9.Other |
| 2.Vin/Al | 6.Brick Ve | 10.Concret |
| 3.Compos. | 7.Solid Br | 12. |
| Roof Surface **1 Asphalt Shingles** | | |
| 1.Asphalt | 4.Composit | 7. |
| 2.Slate | 5.Wood | 8. |
| 3.Metal | 6.Other | 9. |
| SF Masonry Trim **0** | | |
| OPEN-3-CUSTOM **0** | | |
| OPEN-4-CUSTOM **0** | | |
| Year Built **2012** | | |
| Year Remodeled **0** | | |
| Foundation **6 Piers** | | |
| 1.Concrete | 4.Wood | 7. |
| 2.C Block | 5.Slab | 8. |
| 3.Br/Stone | 6.Piers | 9. |
| Basement **9 No Basement** | | |
| 1.1/4 Bmt | 4.Full Bmt | 7. |
| 2.1/2 Bmt | 5.None | 8. |
| 3.3/4 Bmt | 6. | 9.None |
| Bsmt Gar # Cars **0** | | |
| Wet Basement **9 No Basement** | | |
| 1.Dry | 4. | 7. |
| 2.Damp | 5. | 8. |
| 3.Wet | 6. | 9. |

| | | |
|---|---|---|
| SF Bsmt Living **0** | | |
| Fin Bsmt Grade **0 0** | | |
| OPEN-5-CUSTOMIZE **0** | | |
| Heat Type **100%** **9 Not Heated** | | |
| 0.Uncoded | 4.Steam | 8.Fl/Wall |
| 1.HWBB | 5.FWA | 9.No Heat |
| 2.HWCI | 6.GravWA | 10.Radiabt |
| 3.H Pump | 7.Electric | 12. |
| Cool Type **0%** **9 None** | | |
| 1.Refrig | 4.W&C Air | 7. |
| 2.Evapor | 5. | 8. |
| 3.H Pump | 6. | 9.None |
| Kitchen Style **1 Modern** | | |
| 1.Modern | 4.Obsolete | 7. |
| 2.Typical | 5. | 8. |
| 3.Old Type | 6. | 9.None |
| Bath(s) Style **1 Modern Bath(s)** | | |
| 1.Modern | 4.Obsolete | 7. |
| 2.Typical | 5. | 8. |
| 3.Old Type | 6. | 9.None |
| # Rooms **4** | | |
| # Bedrooms **2** | | |
| # Full Baths **1** | | |
| # Half Baths **0** | | |
| # Addn Fixtures **0** | | |
| # Fireplaces **0** | | |

TRIO Software
A Division of Harris Computer Systems

| | | |
|---|---|---|
| Layout **1 Typical** | | |
| 1.Typical | 4. | 7. |
| 2.Inadeq | 5. | 8. |
| 3.Horrid | 6. | 9. |
| Attic **9 None** | | |
| 1.1/4 Fin | 4.Full Fin | 7. |
| 2.1/2 Fin | 5.Fl/Stair | 8. |
| 3.3/4 Fin | 6. | 9.None |
| Insulation **1 Full** | | |
| 1.Full | 4.Minimal | 7. |
| 2.Heavy | 5.Partial | 8. |
| 3.Capped | 6. | 9.None |
| Unfinished % **0%** | | |
| Grade & Factor **2 Fair 100%** | | |
| 1.E Grade | 4.B Grade | 7.AAA Grad |
| 2.D Grade | 5.A Grade | 8.SC Grade |
| 3.C Grade | 6.AA Grade | 9.Same |
| SQFT (Footprint) **528** | | |
| Condition **4 Average** | | |
| 1.Poor | 4.Avg | 7.V G |
| 2.Fair | 5.Avg+ | 8.Exc |
| 3.Avg- | 6.Good | 9.Same |
| Phys. % Good **0%** | | |
| Funct. % Good **100%** | | |
| Functional Code **9 None** | | |
| 1.Incomp | 4.Delap | 7.Seasonal |
| 2.O-Built | 5.Bsmt | 8. |
| 3.Fire | 6.2014 ADJ | 9.None |
| Econ. % Good **100%** | | |
| Economic Code **None** | | |
| 0.None | 3.No Power | 7. |
| 1.Location | 4.Generate | 8. |
| 2.Encroach | 9.None | 9. |
| Entrance Code **0** | | |
| 1.Interior | 4.Vacant | 7. |
| 2.Refusal | 5.Estimate | 8. |
| 3.Informed | 6. | 9. |
| Information Code **0** | | |
| 1.Owner | 4.Agent | 7. |
| 2.Relative | 5.Estimate | 8. |
| 3.Tenant | 6.Other | 9. |

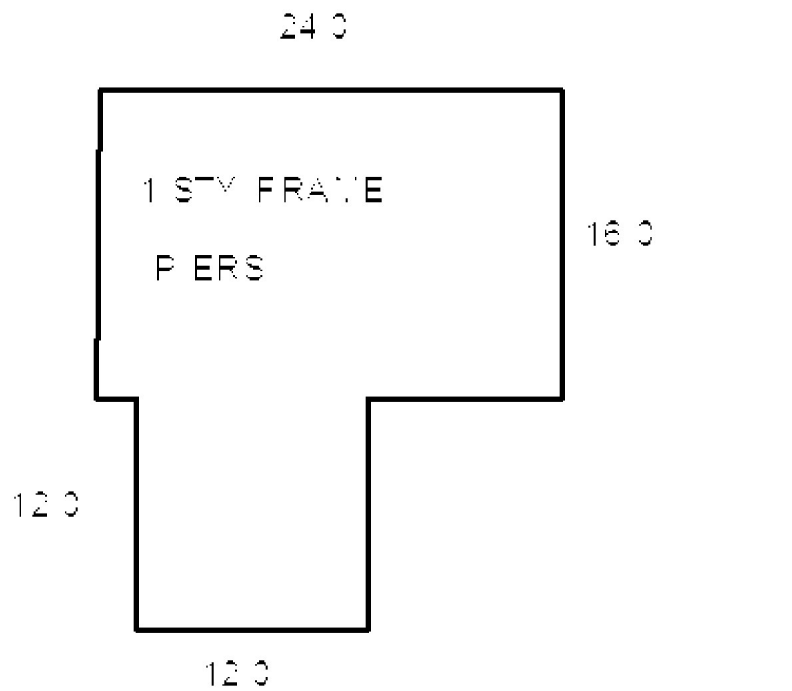

Date Inspected

## Additions, Outbuildings & Improvements

| Type | Year | Units | Grade | Cond | Phys. | Funct. | Sound Value |
|---|---|---|---|---|---|---|---|
| 1 One Story Frame | 2017 | 216 | 0 0 | 4 | 0 % | 100 % | |
| 68 Wood Deck | 2017 | 237 | 0 0 | 4 | 0 % | 100 % | |
| | | | | | % | % | |
| | | | | | % | % | |
| | | | | | % | % | |
| | | | | | % | % | |
| | | | | | % | % | |
| | | | | | % | % | |
| | | | | | % | % | |
| | | | | | % | % | |

1.One Story Fram
2.Two Story Fram
3.Three Story Fr
4.1 & 1/2 Story
5.1 & 3/4 Story
6.2 & 1/2 Story
21.Open Frame Por
22.Encl Frame Por
23.Frame Garage
24.Frame Shed
25.Frame Bay Wind
26.1SFr Overhang
27.Unfin Basement
28.Unfinished Att
29.Finished Attic

Map Lot 111-004 Account 317 Location 563 EASTSIDE ROAD Card 1 Of 1 10/01/2020

REISS, KIM
96 MOUNT HOPE AVENUE
BANGOR ME 04401

B4806P224 B5477P348 B6554P127

Previous Owner
REISS, KIM (J/T)
THOMPSON, ALMA (J/T)
96 MOUNT HOPE AVENUE
BANGOR ME 04401
Sale Date: 4/08/2016

Previous Owner
FELIX, RONALD
FELIX, SHELLY G.
563 EAST SIDE ROAD
HANCOCK ME 04640
Sale Date: 7/03/2007

Previous Owner
CULLY, PRISCILLA
563 EASTSIDE ROAD

HANCOCK ME 04640
Sale Date: 8/24/2004

Inspection Witnessed By:

X Date

| No./Date | Description | Date Insp. |
|---|---|---|
| | | |
| | | |
| | | |

Notes:

**Hancock 2020**

## Property Data

Neighborhood **26 Neighborhood 26**

Tree Growth Year **0**

TREE GROWTH RECERTIFY **0**

STATE SALE CODE **0**

Zone/Land Use **11 Residential**

Secondary Zone

Topography **9** **9**

1.Level 4.Below St 7.
2.Rolling 5.Low 8.
3.Above St 6.Swampy 9.

Utilities **9 None** **9 None**

1.Public 4.Dr Well 7.Cesspool
2.Water 5.Dug Well 8.
3.Sewer 6.Septic 9.None

Street **1 Paved**

1.Paved 4.Proposed 7.
2.Semi Imp 5. 8.
3.Gravel 6. 9.None

REVIEW STRUCTURE YEAR **0**

RENTAL? 0=NO 1=YES **0**

## Sale Data

Sale Date **4/08/2016**

Price

Sale Type **2 Land & Buildings**

1.Land 4.Mobile 7.
2.L & B 5.Other 8.
3.Building 6. 9.

Financing **9 Unknown**

1.Convent 4.Seller 7.
2.FHA/VA 5.Private 8.
3.Assumed 6.Cash 9.Unknown

Validity **2 Related Parties**

1.Valid 4.Split 7.Changes
2.Related 5.Partial 8.Other
3.Distress 6.Exempt 9.Fr Ffclse

Verified **5 Public Record**

1.Buyer 4.Agent 7.Family
2.Seller 5.Pub Rec 8.Other
3.Lender 6.MLS 9.

## Assessment Record

| Year | Land | Buildings | Exempt | Total |
|---|---|---|---|---|
| 2007 | 94,300 | 47,900 | 0 | 142,200 |
| 2008 | 32,900 | 47,900 | 0 | 80,800 |
| 2009 | 32,900 | 47,900 | 0 | 80,800 |
| 2010 | 32,900 | 47,900 | 0 | 80,800 |
| 2011 | 32,900 | 47,900 | 0 | 80,800 |
| 2012 | 32,900 | 47,900 | 0 | 80,800 |
| 2013 | 32,900 | 47,900 | 0 | 80,800 |
| 2014 | 32,900 | 43,400 | 0 | 76,300 |
| 2015 | 32,900 | 43,400 | 0 | 76,300 |
| 2016 | 32,900 | 43,400 | 0 | 76,300 |
| 2017 | 32,900 | 43,400 | 0 | 76,300 |
| 2018 | 32,900 | 43,400 | 0 | 76,300 |
| 2019 | 32,900 | 43,400 | 0 | 76,300 |
| 2020 | 32,900 | 43,400 | 0 | 76,300 |

## Land Data

| Front Foot | Type | Effective Frontage | Effective Depth | Influence Factor | Influence Code |
|---|---|---|---|---|---|
| 11.Regular Lot | | | | % | |
| 12.Delta Triangle | | | | % | |
| 13.Nabla Triangle | | | | % | |
| 14.Rear Land | | | | % | |
| 15.Miscellaneous | | | | % | |
| | | | | % | |
| | | | | % | |
| **Square Foot** | | **Square Feet** | | | |
| 16.Regular Lot | | | | % | |
| 17.Secondary Lot | | | | % | |
| 18.Excess Land | | | | % | |
| 19.Condominium | | | | % | |
| 20.Miscellaneous | | | | % | |
| | | | | % | |
| | | | | % | |
| **Fract. Acre** | | **Acreage/Sites** | | | |
| 21.Homesite (Frac | 21 | 1.00 | | 100 % | 0 |
| 22.Baselot (Fract | 24 | 1.20 | | 100 % | 0 |
| 23.Misc (Fract) | 44 | 1.00 | | 50 % | 0 |
| **Acres** | | | | % | |
| 24.Excess Acres 1 | | | | % | |
| 25.Excess Acres 5 | | | | % | |
| 26.Excess Acres 2 | | | | % | |
| 27.Excess Acres 5 | | | | % | |
| 28.Excess Acres 1 | | | | % | |
| 29.Excess acres | | | | | |

**Total Acreage** 2.20

### Influence Codes

1.Unimproved
2.Excess Frtg
3.Topography
4.Size/Shape
5.Access
6.Restriction
7.Corner Infl
8.Environment
9.Fract Share
**Acres**
30.Industrial Sit
31.Working Waterf
32.Cultivated Cro
33.Pasture
34.Softwood (Farm
35.Mixed Wood (Fa
36.Hardwood (Farm
37.Softwood
38.Mixed Wood
39.Hardwood
40.Wasteland
41.Gravel Pit
42.Mobile Home Si
43.Location Base
44.Lot Improvemen
45.Waterfront A
46.Lobster Pound

# Hancock 2020

Map Lot 111-004 | Account 317 | Location 563 EASTSIDE ROAD | Card 1 Of 1 | 10/01/2020

| | | |
|---|---|---|
| Building Style | **1 Conventional** | |
| 0.Uncoded | 4.Cape | 8.Log |
| 1.Conv. | 5.Garrison | 9.Other |
| 2.Ranch | 6.Colonial | 10.Dutch C |
| 3.R Ranch | 7.Contemp | 11.Farmhou |
| Dwelling Units | **1** | |
| Other Units | **0** | |
| Stories | **4 One & 1/2 Story** | |
| 1.1 | 4.1.5 | 7.3.5 |
| 2.2 | 5.1.75 | 8. |
| 3.3 | 6.2.5 | 9. |
| Exterior Walls | **1 Wood Siding** | |
| 0.Uncoded | 4.Asbestos | 8.Stone |
| 1.Wood | 5.Stucco | 9.Other |
| 2.Vin/Al | 6.Brick Ve | 10.Concret |
| 3.Compos. | 7.Solid Br | 12. |
| Roof Surface | **1 Asphalt Shingles** | |
| 1.Asphalt | 4.Composit | 7. |
| 2.Slate | 5.Wood | 8. |
| 3.Metal | 6.Other | 9. |
| SF Masonry Trim | **0** | |
| OPEN-3-CUSTOM | **0** | |
| OPEN-4-CUSTOM | **0** | |
| Year Built | **1860** | |
| Year Remodeled | **0** | |
| Foundation | **3 Brick &/or Stone** | |
| 1.Concrete | 4.Wood | 7. |
| 2.C Block | 5.Slab | 8. |
| 3.Br/Stone | 6.Piers | 9. |
| Basement | **2 1/2 Basement** | |
| 1.1/4 Bmt | 4.Full Bmt | 7. |
| 2.1/2 Bmt | 5.None | 8. |
| 3.3/4 Bmt | 6. | 9.None |
| Bsmt Gar # Cars | **0** | |
| Wet Basement | **2 Damp Basement** | |
| 1.Dry | 4. | 7. |
| 2.Damp | 5. | 8. |
| 3.Wet | 6. | 9. |

| | | |
|---|---|---|
| SF Bsmt Living | **0** | |
| Fin Bsmt Grade | **0 0** | |
| OPEN-5-CUSTOMIZE | **0** | |
| Heat Type | **67%** | **1 Hot Water BB** |
| 0.Uncoded | 4.Steam | 8.Fl/Wall |
| 1.HWBB | 5.FWA | 9.No Heat |
| 2.HWCI | 6.GravWA | 10.Radiabt |
| 3.H Pump | 7.Electric | 12. |
| Cool Type | **100%** | **9 None** |
| 1.Refrig | 4.W&C Air | 7. |
| 2.Evapor | 5. | 8. |
| 3.H Pump | 6. | 9.None |
| Kitchen Style | **2 Typical** | |
| 1.Modern | 4.Obsolete | 7. |
| 2.Typical | 5. | 8. |
| 3.Old Type | 6. | 9.None |
| Bath(s) Style | **4 Obsolete** | |
| 1.Modern | 4.Obsolete | 7. |
| 2.Typical | 5. | 8. |
| 3.Old Type | 6. | 9.None |
| # Rooms | **8** | |
| # Bedrooms | **3** | |
| # Full Baths | **0** | |
| # Half Baths | **0** | |
| # Addn Fixtures | **0** | |
| # Fireplaces | **0** | |

TRIO Software
A Division of Harris Computer Systems

| | | |
|---|---|---|
| Layout | **1 Typical** | |
| 1.Typical | 4. | 7. |
| 2.Inadeq | 5. | 8. |
| 3.Horrid | 6. | 9. |
| Attic | **9 None** | |
| 1.1/4 Fin | 4.Full Fin | 7. |
| 2.1/2 Fin | 5.Fl/Stair | 8. |
| 3.3/4 Fin | 6. | 9.None |
| Insulation | **9 None** | |
| 1.Full | 4.Minimal | 7. |
| 2.Heavy | 5.Partial | 8. |
| 3.Capped | 6. | 9.None |
| Unfinished % | **0%** | |
| Grade & Factor | **2 Fair 100%** | |
| 1.E Grade | 4.B Grade | 7.AAA Grad |
| 2.D Grade | 5.A Grade | 8.SC Grade |
| 3.C Grade | 6.AA Grade | 9.Same |
| SQFT (Footprint) | **832** | |
| Condition | **3 Below Average** | |
| 1.Poor | 4.Avg | 7.V G |
| 2.Fair | 5.Avg+ | 8.Exc |
| 3.Avg- | 6.Good | 9.Same |
| Phys. % Good | **0%** | |
| Funct. % Good | **90%** | |
| Functional Code | **6 2014 ADJUSTMENT** | |
| 1.Incomp | 4.Delap | 7.Seasonal |
| 2.O-Built | 5.Bsmt | 8. |
| 3.Fire | 6.2014 ADJ | 9.None |
| Econ. % Good | **100%** | |
| Economic Code | **None** | |
| 0.None | 3.No Power | 7. |
| 1.Location | 4.Generate | 8. |
| 2.Encroach | 9.None | 9. |
| Entrance Code | **0** | |
| 1.Interior | 4.Vacant | 7. |
| 2.Refusal | 5.Estimate | 8. |
| 3.Informed | 6. | 9. |
| Information Code | **0** | |
| 1.Owner | 4.Agent | 7. |
| 2.Relative | 5.Estimate | 8. |
| 3.Tenant | 6.Other | 9. |

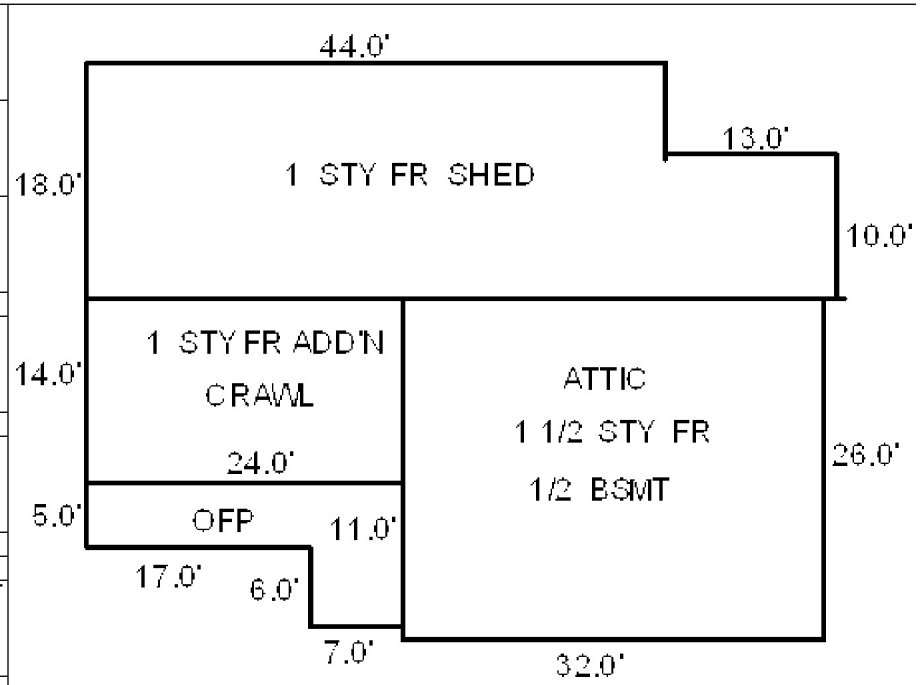


Date Inspected

## Additions, Outbuildings & Improvements

| Type | Year | Units | Grade | Cond | Phys. | Funct. | Sound Value |
|---|---|---|---|---|---|---|---|
| 1 One Story Frame | 0 | 336 | 0 0 | 0 | 0 % | 0 % | |
| 21 Open Frame | 0 | 162 | 0 0 | 0 | 0 % | 0 % | |
| 24 Frame Shed | 0 | 922 | 0 0 | 0 | 0 % | 0 % | |
| | | | | | % | % | |
| | | | | | % | % | |
| | | | | | % | % | |
| | | | | | % | % | |
| | | | | | % | % | |
| | | | | | % | % | |
| | | | | | % | % | |

1.One Story Fram
2.Two Story Fram
3.Three Story Fr
4.1 & 1/2 Story
5.1 & 3/4 Story
6.2 & 1/2 Story
21.Open Frame Por
22.Encl Frame Por
23.Frame Garage
24.Frame Shed
25.Frame Bay Wind
26.1SFr Overhang
27.Unfin Basement
28.Unfinished Att
29.Finished Attic

Map Lot 111-005 Account 2070 Location 213 CROSS ROAD Card 1 Of 1 10/01/2020

DIBELLA, SAMUEL (J/T)
EDNIE, CATHERINE A
213 CROSS ROAD
HANCOCK ME 04640

B4740P244 B5874P121 B6552P65

Previous Owner
HARTSON, JESSE & JEFFERS, TARA (J/T)
HUTTON, PRISCILLA & JEFFERS, VALERIE (J/T)
213 CROSS ROAD
HANCOCK ME 04640
Sale Date: 8/08/2012

Previous Owner

HANCOCK ME 04640
Sale Date: 4/13/2007

Inspection Witnessed By:

X Date

| No./Date | Description | Date Insp. |
|---|---|---|
| | | |
| | | |
| | | |

Notes:

## Property Data

Neighborhood **26 Neighborhood 26**

Tree Growth Year **0**

TREE GROWTH RECERTIFY **0**

STATE SALE CODE **0**

Zone/Land Use **11 Residential**

Secondary Zone

Topography

1.Level 4.Below St 7.
2.Rolling 5.Low 8.
3.Above St 6.Swampy 9.

Utilities

1.Public 4.Dr Well 7.Cesspool
2.Water 5.Dug Well 8.
3.Sewer 6.Septic 9.None

Street

1.Paved 4.Proposed 7.
2.Semi Imp 5. 8.
3.Gravel 6. 9.None

REVIEW STRUCTURE YEAR **0**

RENTAL? 0=NO 1=YES **0**

## Sale Data

Sale Date **8/08/2012**

Price

Sale Type **2 Land & Buildings**

1.Land 4.Mobile 7.
2.L & B 5.Other 8.
3.Building 6. 9.

Financing **9 Unknown**

1.Convent 4.Seller 7.
2.FHA/VA 5.Private 8.
3.Assumed 6.Cash 9.Unknown

Validity **2 Related Parties**

1.Valid 4.Split 7.Changes
2.Related 5.Partial 8.Other
3.Distress 6.Exempt 9.Fr Ffclse

Verified **5 Public Record**

1.Buyer 4.Agent 7.Family
2.Seller 5.Pub Rec 8.Other
3.Lender 6.MLS 9.

## Assessment Record

| Year | Land | Buildings | Exempt | Total |
|---|---|---|---|---|
| 2008 | 109,900 | 71,000 | 0 | 180,900 |
| 2009 | 109,900 | 71,000 | 13,000 | 167,900 |
| 2010 | 109,900 | 71,000 | 10,000 | 170,900 |
| 2011 | 109,900 | 84,200 | 10,000 | 184,100 |
| 2012 | 109,900 | 84,200 | 10,000 | 184,100 |
| 2013 | 94,300 | 84,200 | 10,000 | 168,500 |
| 2014 | 94,300 | 84,200 | 10,800 | 167,700 |
| 2015 | 94,300 | 84,200 | 11,000 | 167,500 |
| 2016 | 112,900 | 84,200 | 16,500 | 180,600 |
| 2017 | 108,300 | 84,200 | 22,000 | 170,500 |
| 2018 | 40,200 | 155,200 | 0 | 195,400 |
| 2019 | 40,200 | 155,200 | 0 | 195,400 |
| 2020 | 40,200 | 155,200 | 0 | 195,400 |

## Land Data

| Front Foot | Type | Effective Frontage | Effective Depth | Influence Factor | Influence Code |
|---|---|---|---|---|---|
| 11.Regular Lot | | | | % | |
| 12.Delta Triangle | | | | % | |
| 13.Nabla Triangle | | | | % | |
| 14.Rear Land | | | | % | |
| 15.Miscellaneous | | | | % | |
| | | | | % | |
| | | | | % | |
| **Square Foot** | | **Square Feet** | | | |
| 16.Regular Lot | | | | % | |
| 17.Secondary Lot | | | | % | |
| 18.Excess Land | | | | % | |
| 19.Condominium | | | | % | |
| 20.Miscellaneous | | | | % | |
| | | | | % | |
| | | | | % | |
| **Fract. Acre** | | **Acreage/Sites** | | | |
| 21.Homesite (Frac | 21 | 1.00 | 100 | % | 0 |
| 22.Baselot (Fract | 24 | 1.60 | 100 | % | 0 |
| 23.Misc (Fract) | 44 | 1.00 | 100 | % | 0 |
| **Acres** | | | | % | |
| 24.Excess Acres 1 | | | | % | |
| 25.Excess Acres 5 | | | | % | |
| 26.Excess Acres 2 | | | | % | |
| 27.Excess Acres 5 | | | | % | |
| 28.Excess Acres 1 | | | | % | |
| 29.Excess acres | | | | % | |

**Total Acreage** 2.60

### Influence Codes

1.Unimproved
2.Excess Frtg
3.Topography
4.Size/Shape
5.Access
6.Restriction
7.Corner Infl
8.Environment
9.Fract Share
**Acres**
30.Industrial Sit
31.Working Waterf
32.Cultivated Cro
33.Pasture
34.Softwood (Farm
35.Mixed Wood (Fa
36.Hardwood (Farm
37.Softwood
38.Mixed Wood
39.Hardwood
40.Wasteland
41.Gravel Pit
42.Mobile Home Si
43.Location Base
44.Lot Improvemen
45.Waterfront A
46.Lobster Pound

**Hancock 2020**

# Hancock 2020

Map Lot 111-005 | Account 2070 | Location 213 CROSS ROAD | Card 1 Of 1 | 10/01/2020

| | | |
|---|---|---|
| Building Style **4 Cape** | | |
| 0.Uncoded | 4.Cape | 8.Log |
| 1.Conv. | 5.Garrison | 9.Other |
| 2.Ranch | 6.Colonial | 10.Dutch C |
| 3.R Ranch | 7.Contemp | 11.Farmhou |
| Dwelling Units **1** | | |
| Other Units **0** | | |
| Stories **5 One & 3/4 Story** | | |
| 1.1 | 4.1.5 | 7.3.5 |
| 2.2 | 5.1.75 | 8. |
| 3.3 | 6.2.5 | 9. |
| Exterior Walls **1 Wood Siding** | | |
| 0.Uncoded | 4.Asbestos | 8.Stone |
| 1.Wood | 5.Stucco | 9.Other |
| 2.Vin/Al | 6.Brick Ve | 10.Concret |
| 3.Compos. | 7.Solid Br | 12. |
| Roof Surface **1 Asphalt Shingles** | | |
| 1.Asphalt | 4.Composit | 7. |
| 2.Slate | 5.Wood | 8. |
| 3.Metal | 6.Other | 9. |
| SF Masonry Trim **0** | | |
| OPEN-3-CUSTOM **0** | | |
| OPEN-4-CUSTOM **0** | | |
| Year Built **2008** | | |
| Year Remodeled **0** | | |
| Foundation **5 Concrete Slab** | | |
| 1.Concrete | 4.Wood | 7. |
| 2.C Block | 5.Slab | 8. |
| 3.Br/Stone | 6.Piers | 9. |
| Basement **9 No Basement** | | |
| 1.1/4 Bmt | 4.Full Bmt | 7. |
| 2.1/2 Bmt | 5.None | 8. |
| 3.3/4 Bmt | 6. | 9.None |
| Bsmt Gar # Cars **0** | | |
| Wet Basement **9 No Basement** | | |
| 1.Dry | 4. | 7. |
| 2.Damp | 5. | 8. |
| 3.Wet | 6. | 9. |

| | | |
|---|---|---|
| SF Bsmt Living **0** | | |
| Fin Bsmt Grade **0 0** | | |
| OPEN-5-CUSTOMIZE **0** | | |
| Heat Type **100% 1 Hot Water BB** | | |
| 0.Uncoded | 4.Steam | 8.Fl/Wall |
| 1.HWBB | 5.FWA | 9.No Heat |
| 2.HWCI | 6.GravWA | 10.Radiabt |
| 3.H Pump | 7.Electric | 12. |
| Cool Type **100% 9 None** | | |
| 1.Refrig | 4.W&C Air | 7. |
| 2.Evapor | 5. | 8. |
| 3.H Pump | 6. | 9.None |
| Kitchen Style **2 Typical** | | |
| 1.Modern | 4.Obsolete | 7. |
| 2.Typical | 5. | 8. |
| 3.Old Type | 6. | 9.None |
| Bath(s) Style **2 Typical Bath(s)** | | |
| 1.Modern | 4.Obsolete | 7. |
| 2.Typical | 5. | 8. |
| 3.Old Type | 6. | 9.None |
| # Rooms **5** | | |
| # Bedrooms **3** | | |
| # Full Baths **1** | | |
| # Half Baths **1** | | |
| # Addn Fixtures **0** | | |
| # Fireplaces **0** | | |

TRIO Software
A Division of Harris Computer Systems

| | | |
|---|---|---|
| Layout **1 Typical** | | |
| 1.Typical | 4. | 7. |
| 2.Inadeq | 5. | 8. |
| 3.Horrid | 6. | 9. |
| Attic **9 None** | | |
| 1.1/4 Fin | 4.Full Fin | 7. |
| 2.1/2 Fin | 5.Fl/Stair | 8. |
| 3.3/4 Fin | 6. | 9.None |
| Insulation **1 Full** | | |
| 1.Full | 4.Minimal | 7. |
| 2.Heavy | 5.Partial | 8. |
| 3.Capped | 6. | 9.None |
| Unfinished % **0%** | | |
| Grade & Factor **3 Average 100%** | | |
| 1.E Grade | 4.B Grade | 7.AAA Grad |
| 2.D Grade | 5.A Grade | 8.SC Grade |
| 3.C Grade | 6.AA Grade | 9.Same |
| SQFT (Footprint) **896** | | |
| Condition **4 Average** | | |
| 1.Poor | 4.Avg | 7.V G |
| 2.Fair | 5.Avg+ | 8.Exc |
| 3.Avg- | 6.Good | 9.Same |
| Phys. % Good **0%** | | |
| Funct. % Good **100%** | | |
| Functional Code **9 None** | | |
| 1.Incomp | 4.Delap | 7.Seasonal |
| 2.O-Built | 5.Bsmt | 8. |
| 3.Fire | 6.2014 ADJ | 9.None |
| Econ. % Good **100%** | | |
| Economic Code **None** | | |
| 0.None | 3.No Power | 7. |
| 1.Location | 4.Generate | 8. |
| 2.Encroach | 9.None | 9. |
| Entrance Code **0** | | |
| 1.Interior | 4.Vacant | 7. |
| 2.Refusal | 5.Estimate | 8. |
| 3.Informed | 6. | 9. |
| Information Code **0** | | |
| 1.Owner | 4.Agent | 7. |
| 2.Relative | 5.Estimate | 8. |
| 3.Tenant | 6.Other | 9. |

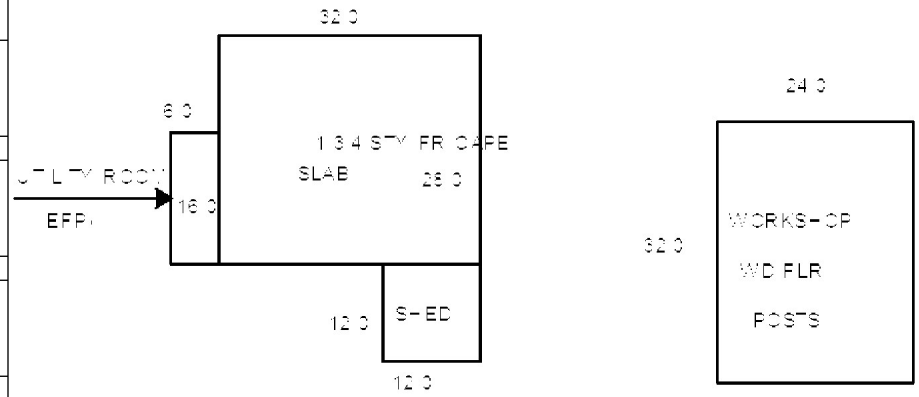


Date Inspected

## Additions, Outbuildings & Improvements

| Type | Year | Units | Grade | Cond | Phys. | Funct. | Sound Value |
|---|---|---|---|---|---|---|---|
| 24 Frame Shed | 2011 | 768 | 5 100 | 4 | 0 % | 100 % | |
| | | | | | % | % | |
| | | | | | % | % | |
| | | | | | % | % | |
| | | | | | % | % | |
| | | | | | % | % | |
| | | | | | % | % | |
| | | | | | % | % | |
| | | | | | % | % | |
| | | | | | % | % | |

1.One Story Fram
2.Two Story Fram
3.Three Story Fr
4.1 & 1/2 Story
5.1 & 3/4 Story
6.2 & 1/2 Story
21.Open Frame Por
22.Encl Frame Por
23.Frame Garage
24.Frame Shed
25.Frame Bay Wind
26.1SFr Overhang
27.Unfin Basement
28.Unfinished Att
29.Finished Attic

Map Lot 111-005-001 Account 2183 Location 553 EASTSIDE ROAD Card 1 Of 1 10/01/2020

HUTTON, PRISCILLA
5B PONDFIELD LANE
MOUNT DESERT ME 04660

B5874P118

Inspection Witnessed By:

X Date

| No./Date | Description | Date Insp. |
|---|---|---|
| | | |
| | | |
| | | |

Notes:

**Hancock 2020**

## Property Data

Neighborhood **26 Neighborhood 26**

Tree Growth Year **0**

TREE GROWTH RECERTIFY **0**

STATE SALE CODE **0**

Zone/Land Use **11 Residential**

Secondary Zone

Topography **1 Level**

1.Level 4.Below St 7.
2.Rolling 5.Low 8.
3.Above St 6.Swampy 9.

Utilities

1.Public 4.Dr Well 7.Cesspool
2.Water 5.Dug Well 8.
3.Sewer 6.Septic 9.None

Street **1 Paved**

1.Paved 4.Proposed 7.
2.Semi Imp 5. 8.
3.Gravel 6. 9.None

REVIEW STRUCTURE YEAR **0**

RENTAL? 0=NO 1=YES **0**

## Sale Data

Sale Date

Price

Sale Type

1.Land 4.Mobile 7.
2.L & B 5.Other 8.
3.Building 6. 9.

Financing

1.Convent 4.Seller 7.
2.FHA/VA 5.Private 8.
3.Assumed 6.Cash 9.Unknown

Validity

1.Valid 4.Split 7.Changes
2.Related 5.Partial 8.Other
3.Distress 6.Exempt 9.Fr Ffclse

Verified

1.Buyer 4.Agent 7.Family
2.Seller 5.Pub Rec 8.Other
3.Lender 6.MLS 9.

## Assessment Record

| Year | Land | Buildings | Exempt | Total |
|---|---|---|---|---|
| 2013 | 28,800 | 0 | 0 | 28,800 |
| 2014 | 28,800 | 0 | 0 | 28,800 |
| 2015 | 28,800 | 0 | 0 | 28,800 |
| 2016 | 28,800 | 54,200 | 0 | 83,000 |
| 2017 | 28,800 | 48,100 | 0 | 76,900 |
| 2018 | 28,800 | 48,100 | 0 | 76,900 |
| 2019 | 28,800 | 48,100 | 0 | 76,900 |
| 2020 | 28,800 | 48,100 | 0 | 76,900 |

## Land Data

| Front Foot | Type | Effective Frontage | Effective Depth | Influence Factor | Influence Code |
|---|---|---|---|---|---|
| 11.Regular Lot | | | | % | |
| 12.Delta Triangle | | | | % | |
| 13.Nabla Triangle | | | | % | |
| 14.Rear Land | | | | % | |
| 15.Miscellaneous | | | | % | |
| | | | | % | |
| | | | | % | |

| Square Foot | | Square Feet | | |
|---|---|---|---|---|
| 16.Regular Lot | | | % | |
| 17.Secondary Lot | | | % | |
| 18.Excess Land | | | % | |
| 19.Condominium | | | % | |
| 20.Miscellaneous | | | % | |
| | | | % | |
| | | | % | |

| Fract. Acre | | Acreage/Sites | | |
|---|---|---|---|---|
| 21.Homesite (Frac | 21 | 1.00 | 100 % | 0 |
| 22.Baselot (Fract | 24 | 4.00 | 100 % | 0 |
| 23.Misc (Fract) | 25 | 0.33 | 100 % | 0 |
| **Acres** | | | % | |
| 24.Excess Acres 1 | | | % | |
| 25.Excess Acres 5 | | | % | |
| 26.Excess Acres 2 | | | % | |
| 27.Excess Acres 5 | | | % | |
| 28.Excess Acres 1 | | | | |
| 29.Excess acres | | | | |

**Total Acreage** 5.33

### Influence Codes

1.Unimproved
2.Excess Frtg
3.Topography
4.Size/Shape
5.Access
6.Restriction
7.Corner Infl
8.Environment
9.Fract Share
**Acres**
30.Industrial Sit
31.Working Waterf
32.Cultivated Cro
33.Pasture
34.Softwood (Farm
35.Mixed Wood (Fa
36.Hardwood (Farm
37.Softwood
38.Mixed Wood
39.Hardwood
40.Wasteland
41.Gravel Pit
42.Mobile Home Si
43.Location Base
44.Lot Improvemen
45.Waterfront A
46.Lobster Pound

# Hancock 2020

Map Lot 111-005-001 | Account 2183 | Location 553 EASTSIDE ROAD | Card 1 Of 1 | 10/01/2020

| Building Style | | |
|---|---|---|
| 0.Uncoded | 4.Cape | 8.Log |
| 1.Conv. | 5.Garrison | 9.Other |
| 2.Ranch | 6.Colonial | 10.Dutch C |
| 3.R Ranch | 7.Contemp | 11.Farmhou |

| Dwelling Units |
|---|
| Other Units |

| Stories | | |
|---|---|---|
| 1.1 | 4.1.5 | 7.3.5 |
| 2.2 | 5.1.75 | 8. |
| 3.3 | 6.2.5 | 9. |

| Exterior Walls | | |
|---|---|---|
| 0.Uncoded | 4.Asbestos | 8.Stone |
| 1.Wood | 5.Stucco | 9.Other |
| 2.Vin/Al | 6.Brick Ve | 10.Concret |
| 3.Compos. | 7.Solid Br | 12. |

| Roof Surface | | |
|---|---|---|
| 1.Asphalt | 4.Composit | 7. |
| 2.Slate | 5.Wood | 8. |
| 3.Metal | 6.Other | 9. |

| SF Masonry Trim |
|---|
| OPEN-3-CUSTOM |
| OPEN-4-CUSTOM |
| Year Built |
| Year Remodeled |

| Foundation | | |
|---|---|---|
| 1.Concrete | 4.Wood | 7. |
| 2.C Block | 5.Slab | 8. |
| 3.Br/Stone | 6.Piers | 9. |

| Basement | | |
|---|---|---|
| 1.1/4 Bmt | 4.Full Bmt | 7. |
| 2.1/2 Bmt | 5.None | 8. |
| 3.3/4 Bmt | 6. | 9.None |

| Bsmt Gar # Cars |
|---|

| Wet Basement | | |
|---|---|---|
| 1.Dry | 4. | 7. |
| 2.Damp | 5. | 8. |
| 3.Wet | 6. | 9. |

| SF Bsmt Living |
|---|
| Fin Bsmt Grade |
| OPEN-5-CUSTOMIZE |

| Heat Type **100%** | | |
|---|---|---|
| 0.Uncoded | 4.Steam | 8.Fl/Wall |
| 1.HWBB | 5.FWA | 9.No Heat |
| 2.HWCI | 6.GravWA | 10.Radiabt |
| 3.H Pump | 7.Electric | 12. |

| Cool Type **100%** | | |
|---|---|---|
| 1.Refrig | 4.W&C Air | 7. |
| 2.Evapor | 5. | 8. |
| 3.H Pump | 6. | 9.None |

| Kitchen Style | | |
|---|---|---|
| 1.Modern | 4.Obsolete | 7. |
| 2.Typical | 5. | 8. |
| 3.Old Type | 6. | 9.None |

| Bath(s) Style | | |
|---|---|---|
| 1.Modern | 4.Obsolete | 7. |
| 2.Typical | 5. | 8. |
| 3.Old Type | 6. | 9.None |

| # Rooms |
|---|
| # Bedrooms |
| # Full Baths |
| # Half Baths |
| # Addn Fixtures |
| # Fireplaces |

TRIO Software
A Division of Harris Computer Systems

| Layout | | |
|---|---|---|
| 1.Typical | 4. | 7. |
| 2.Inadeq | 5. | 8. |
| 3.Horrid | 6. | 9. |

| Attic | | |
|---|---|---|
| 1.1/4 Fin | 4.Full Fin | 7. |
| 2.1/2 Fin | 5.Fl/Stair | 8. |
| 3.3/4 Fin | 6. | 9.None |

| Insulation | | |
|---|---|---|
| 1.Full | 4.Minimal | 7. |
| 2.Heavy | 5.Partial | 8. |
| 3.Capped | 6. | 9.None |

| Unfinished % |
|---|

| Grade & Factor | | |
|---|---|---|
| 1.E Grade | 4.B Grade | 7.AAA Grad |
| 2.D Grade | 5.A Grade | 8.SC Grade |
| 3.C Grade | 6.AA Grade | 9.Same |

| SQFT (Footprint) |
|---|

| Condition | | |
|---|---|---|
| 1.Poor | 4.Avg | 7.V G |
| 2.Fair | 5.Avg+ | 8.Exc |
| 3.Avg- | 6.Good | 9.Same |

| Phys. % Good |
|---|
| Funct. % Good |

| Functional Code | | |
|---|---|---|
| 1.Incomp | 4.Delap | 7.Seasonal |
| 2.O-Built | 5.Bsmt | 8. |
| 3.Fire | 6.2014 ADJ | 9.None |

| Econ. % Good |
|---|

| Economic Code | | |
|---|---|---|
| 0.None | 3.No Power | 7. |
| 1.Location | 4.Generate | 8. |
| 2.Encroach | 9.None | 9. |

| Entrance Code **0** | | |
|---|---|---|
| 1.Interior | 4.Vacant | 7. |
| 2.Refusal | 5.Estimate | 8. |
| 3.Informed | 6. | 9. |

| Information Code **0** | | |
|---|---|---|
| 1.Owner | 4.Agent | 7. |
| 2.Relative | 5.Estimate | 8. |
| 3.Tenant | 6.Other | 9. |

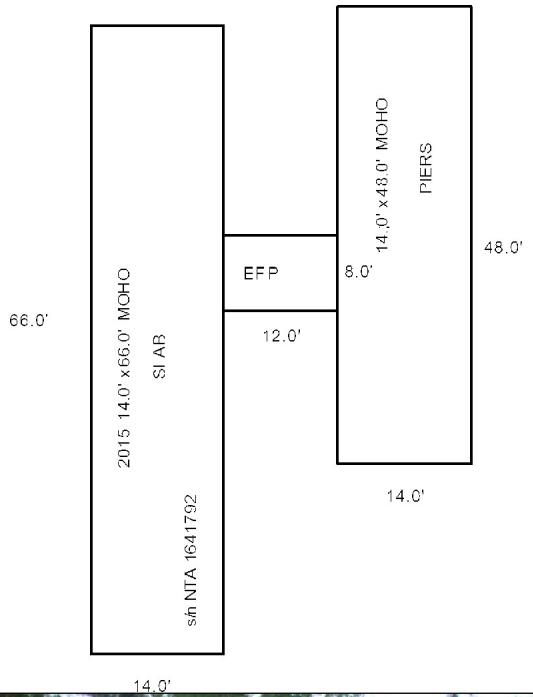

Date Inspected

## Additions, Outbuildings & Improvements

| Type | Year | Units | Grade | Cond | Phys. | Funct. | Sound Value |
|---|---|---|---|---|---|---|---|
| 998 14 Mobile Home | 2015 | 13x66 | 3 100 | 4 | 0 % | 100 % | |
| 60 Concrete Slab | 2015 | 926 | 3 100 | 4 | 0 % | 100 % | |
| 998 14 Mobile Home | 2010 | 6x72 | 3 100 | 4 | 0 % | 70 % | |
| | | | | | % | % | |
| | | | | | % | % | |
| | | | | | % | % | |
| | | | | | % | % | |
| | | | | | % | % | |
| | | | | | % | % | |
| | | | | | % | % | |

1.One Story Fram
2.Two Story Fram
3.Three Story Fr
4.1 & 1/2 Story
5.1 & 3/4 Story
6.2 & 1/2 Story
21.Open Frame Por
22.Encl Frame Por
23.Frame Garage
24.Frame Shed
25.Frame Bay Wind
26.1SFr Overhang
27.Unfin Basement
28.Unfinished Att
29.Finished Attic

Map Lot 111-005-002 Account 1788 Location 571 EASTSIDE ROAD Card 1 Of 1 10/01/2020

DORNAN, VALERIE
571 EASTSIDE ROAD
HANCOCK ME 04640

B5874P118 B6552P72

Previous Owner
TOWN OF HANCOCK

Sale Date: 9/18/2013

Inspection Witnessed By:

X Date

| No./Date | Description | Date Insp. |
|---|---|---|
| | | |
| | | |
| | | |

Notes:

**Hancock 2020**

## Property Data

Neighborhood **26 Neighborhood 26**

Tree Growth Year **0**

TREE GROWTH RECERTIFY **0**

STATE SALE CODE **0**

Zone/Land Use **11 Residential**

Secondary Zone

Topography

| | | |
|---|---|---|
| 1.Level | 4.Below St | 7. |
| 2.Rolling | 5.Low | 8. |
| 3.Above St | 6.Swampy | 9. |

Utilities

| | | |
|---|---|---|
| 1.Public | 4.Dr Well | 7.Cesspool |
| 2.Water | 5.Dug Well | 8. |
| 3.Sewer | 6.Septic | 9.None |

Street

| | | |
|---|---|---|
| 1.Paved | 4.Proposed | 7. |
| 2.Semi Imp | 5. | 8. |
| 3.Gravel | 6. | 9.None |

REVIEW STRUCTURE YEAR **0**

RENTAL? 0=NO 1=YES **0**

## Sale Data

Sale Date

Price

Sale Type **9**

| | | |
|---|---|---|
| 1.Land | 4.Mobile | 7. |
| 2.L & B | 5.Other | 8. |
| 3.Building | 6. | 9. |

Financing **8 .....**

| | | |
|---|---|---|
| 1.Convent | 4.Seller | 7. |
| 2.FHA/VA | 5.Private | 8. |
| 3.Assumed | 6.Cash | 9.Unknown |

Validity **8 Other Non Valid**

| | | |
|---|---|---|
| 1.Valid | 4.Split | 7.Changes |
| 2.Related | 5.Partial | 8.Other |
| 3.Distress | 6.Exempt | 9.Fr Ffclse |

Verified **9 .....**

| | | |
|---|---|---|
| 1.Buyer | 4.Agent | 7.Family |
| 2.Seller | 5.Pub Rec | 8.Other |
| 3.Lender | 6.MLS | 9. |

## Assessment Record

| Year | Land | Buildings | Exempt | Total |
|---|---|---|---|---|
| 2007 | 0 | 0 | 0 | 0 |
| 2008 | 0 | 0 | 0 | 0 |
| 2009 | 0 | 0 | 0 | 0 |
| 2010 | 0 | 0 | 0 | 0 |
| 2011 | 0 | 0 | 0 | 0 |
| 2012 | 0 | 0 | 0 | 0 |
| 2013 | 0 | 0 | 0 | 0 |
| 2014 | 0 | 0 | 0 | 0 |
| 2015 | 14,000 | 33,200 | 0 | 47,200 |
| 2016 | 14,000 | 40,300 | 0 | 54,300 |
| 2017 | 64,500 | 43,900 | 0 | 108,400 |
| 2018 | 64,500 | 43,900 | 0 | 108,400 |
| 2019 | 64,500 | 43,900 | 0 | 108,400 |
| 2020 | 64,500 | 43,900 | 25,000 | 83,400 |

## Land Data

| Front Foot | Type | Effective Frontage | Effective Depth | Influence Factor | Influence Code |
|---|---|---|---|---|---|
| 11.Regular Lot | | | | % | |
| 12.Delta Triangle | | | | % | |
| 13.Nabla Triangle | | | | % | |
| 14.Rear Land | | | | % | |
| 15.Miscellaneous | | | | % | |
| | | | | % | |
| | | | | % | |
| **Square Foot** | | **Square Feet** | | | |
| 16.Regular Lot | | | | % | |
| 17.Secondary Lot | | | | % | |
| 18.Excess Land | | | | % | |
| 19.Condominium | | | | % | |
| 20.Miscellaneous | | | | % | |
| | | | | % | |
| | | | | % | |
| **Fract. Acre** | | **Acreage/Sites** | | | |
| 21.Homesite (Frac | 44 | 1.00 | 100 | % | 0 |
| 22.Baselot (Fract | 21 | 1.00 | 100 | % | 0 |
| 23.Misc (Fract) | 24 | 4.00 | 100 | % | 0 |
| **Acres** | 25 | 9.00 | 100 | % | 0 |
| 24.Excess Acres 1 | | | | % | |
| 25.Excess Acres 5 | | | | % | |
| 26.Excess Acres 2 | | | | % | |
| 27.Excess Acres 5 | | | | % | |
| 28.Excess Acres 1 | | | | | |
| 29.Excess acres | | | | | |

**Total Acreage** 14.00

### Influence Codes

1.Unimproved
2.Excess Frtg
3.Topography
4.Size/Shape
5.Access
6.Restriction
7.Corner Infl
8.Environment
9.Fract Share
**Acres**
30.Industrial Sit
31.Working Waterf
32.Cultivated Cro
33.Pasture
34.Softwood (Farm
35.Mixed Wood (Fa
36.Hardwood (Farm
37.Softwood
38.Mixed Wood
39.Hardwood
40.Wasteland
41.Gravel Pit
42.Mobile Home Si
43.Location Base
44.Lot Improvemen
45.Waterfront A
46.Lobster Pound

# Hancock 2020

Map Lot 111-005-002 | Account 1788 | Location 571 EASTSIDE ROAD | Card 1 Of 1 | 10/01/2020

| | | |
|---|---|---|
| Building Style **4 Cape** | | |
| 0.Uncoded | 4.Cape | 8.Log |
| 1.Conv. | 5.Garrison | 9.Other |
| 2.Ranch | 6.Colonial | 10.Dutch C |
| 3.R Ranch | 7.Contemp | 11.Farmhou |
| Dwelling Units **1** | | |
| Other Units **0** | | |
| Stories **5 One & 3/4 Story** | | |
| 1.1 | 4.1.5 | 7.3.5 |
| 2.2 | 5.1.75 | 8. |
| 3.3 | 6.2.5 | 9. |
| Exterior Walls **1 Wood Siding** | | |
| 0.Uncoded | 4.Asbestos | 8.Stone |
| 1.Wood | 5.Stucco | 9.Other |
| 2.Vin/Al | 6.Brick Ve | 10.Concret |
| 3.Compos. | 7.Solid Br | 12. |
| Roof Surface **1 Asphalt Shingles** | | |
| 1.Asphalt | 4.Composit | 7. |
| 2.Slate | 5.Wood | 8. |
| 3.Metal | 6.Other | 9. |
| SF Masonry Trim **0** | | |
| OPEN-3-CUSTOM **0** | | |
| OPEN-4-CUSTOM **0** | | |
| Year Built **2015** | | |
| Year Remodeled **0** | | |
| Foundation **1 Concrete** | | |
| 1.Concrete | 4.Wood | 7. |
| 2.C Block | 5.Slab | 8. |
| 3.Br/Stone | 6.Piers | 9. |
| Basement **4 Full Basement** | | |
| 1.1/4 Bmt | 4.Full Bmt | 7. |
| 2.1/2 Bmt | 5.None | 8. |
| 3.3/4 Bmt | 6. | 9.None |
| Bsmt Gar # Cars **0** | | |
| Wet Basement **1 Dry Basement** | | |
| 1.Dry | 4. | 7. |
| 2.Damp | 5. | 8. |
| 3.Wet | 6. | 9. |

| | | |
|---|---|---|
| SF Bsmt Living **576** | | |
| Fin Bsmt Grade **3 45** | | |
| OPEN-5-CUSTOMIZE **0** | | |
| Heat Type **100% 5 Forced Warm Air** | | |
| 0.Uncoded | 4.Steam | 8.Fl/Wall |
| 1.HWBB | 5.FWA | 9.No Heat |
| 2.HWCI | 6.GravWA | 10.Radiabt |
| 3.H Pump | 7.Electric | 12. |
| Cool Type **100% 9 None** | | |
| 1.Refrig | 4.W&C Air | 7. |
| 2.Evapor | 5. | 8. |
| 3.H Pump | 6. | 9.None |
| Kitchen Style **2 Typical** | | |
| 1.Modern | 4.Obsolete | 7. |
| 2.Typical | 5. | 8. |
| 3.Old Type | 6. | 9.None |
| Bath(s) Style **2 Typical Bath(s)** | | |
| 1.Modern | 4.Obsolete | 7. |
| 2.Typical | 5. | 8. |
| 3.Old Type | 6. | 9.None |
| # Rooms **5** | | |
| # Bedrooms **2** | | |
| # Full Baths **1** | | |
| # Half Baths **0** | | |
| # Addn Fixtures **0** | | |
| # Fireplaces **0** | | |

TRIO Software
A Division of Harris Computer Systems

| | | |
|---|---|---|
| Layout **1 Typical** | | |
| 1.Typical | 4. | 7. |
| 2.Inadeq | 5. | 8. |
| 3.Horrid | 6. | 9. |
| Attic **9 None** | | |
| 1.1/4 Fin | 4.Full Fin | 7. |
| 2.1/2 Fin | 5.Fl/Stair | 8. |
| 3.3/4 Fin | 6. | 9.None |
| Insulation **1 Full** | | |
| 1.Full | 4.Minimal | 7. |
| 2.Heavy | 5.Partial | 8. |
| 3.Capped | 6. | 9.None |
| Unfinished % **43%** | | |
| Grade & Factor **3 Average 100%** | | |
| 1.E Grade | 4.B Grade | 7.AAA Grad |
| 2.D Grade | 5.A Grade | 8.SC Grade |
| 3.C Grade | 6.AA Grade | 9.Same |
| SQFT (Footprint) **1024** | | |
| Condition **4 Average** | | |
| 1.Poor | 4.Avg | 7.V G |
| 2.Fair | 5.Avg+ | 8.Exc |
| 3.Avg- | 6.Good | 9.Same |
| Phys. % Good **0%** | | |
| Funct. % Good **25%** | | |
| Functional Code **1 Incomplete** | | |
| 1.Incomp | 4.Delap | 7.Seasonal |
| 2.O-Built | 5.Bsmt | 8. |
| 3.Fire | 6.2014 ADJ | 9.None |
| Econ. % Good **100%** | | |
| Economic Code **None** | | |
| 0.None | 3.No Power | 7. |
| 1.Location | 4.Generate | 8. |
| 2.Encroach | 9.None | 9. |
| Entrance Code **0** | | |
| 1.Interior | 4.Vacant | 7. |
| 2.Refusal | 5.Estimate | 8. |
| 3.Informed | 6. | 9. |
| Information Code **0** | | |
| 1.Owner | 4.Agent | 7. |
| 2.Relative | 5.Estimate | 8. |
| 3.Tenant | 6.Other | 9. |

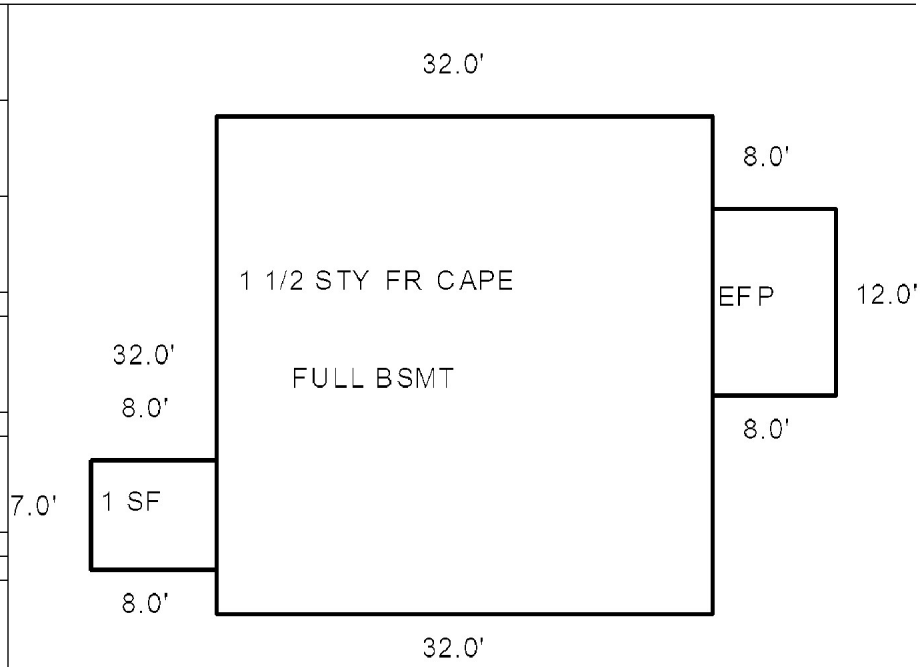

Date Inspected

## Additions, Outbuildings & Improvements

| Type | Year | Units | Grade | Cond | Phys. | Funct. | Sound Value |
|---|---|---|---|---|---|---|---|
| 1 One Story Frame | 2016 | 56 | 0 0 | 0 | 0 % | 50 % | |
| 22 Encl Frame Porch | 2016 | 96 | 5 100 | 4 | 0 % | 100 % | |
| | | | | | % | % | |
| | | | | | % | % | |
| | | | | | % | % | |
| | | | | | % | % | |
| | | | | | % | % | |
| | | | | | % | % | |
| | | | | | % | % | |
| | | | | | % | % | |

1.One Story Fram
2.Two Story Fram
3.Three Story Fr
4.1 & 1/2 Story
5.1 & 3/4 Story
6.2 & 1/2 Story
21.Open Frame Por
22.Encl Frame Por
23.Frame Garage
24.Frame Shed
25.Frame Bay Wind
26.1SFr Overhang
27.Unfin Basement
28.Unfinished Att
29.Finished Attic

Map Lot 111-005-003 Account 2205 Location CROSS ROAD Card 1 Of 1 10/01/2020

CRABTREE NECK LAND TRUST
PO BOX 273
HANCOCK ME 04640

B6626P95 B6908P35

Previous Owner
HARTSON, JESSE & TARA
9 ALLEGIANCE LANE

MOUNT DESERT ME 04660
Sale Date: 8/27/2018

Inspection Witnessed By:

X Date

| No./Date | Description | Date Insp. |
|---|---|---|
| | | |
| | | |
| | | |

Notes:

**Hancock 2020**

## Property Data

Neighborhood **26 Neighborhood 26**

Tree Growth Year **0**

TREE GROWTH RECERTIFY **0**

STATE SALE CODE **0**

Zone/Land Use **11 Residential**

Secondary Zone

Topography **1 Level**

| | | |
|---|---|---|
| 1.Level | 4.Below St | 7. |
| 2.Rolling | 5.Low | 8. |
| 3.Above St | 6.Swampy | 9. |

Utilities

| | | |
|---|---|---|
| 1.Public | 4.Dr Well | 7.Cesspool |
| 2.Water | 5.Dug Well | 8. |
| 3.Sewer | 6.Septic | 9.None |

Street **1 Paved**

| | | |
|---|---|---|
| 1.Paved | 4.Proposed | 7. |
| 2.Semi Imp | 5. | 8. |
| 3.Gravel | 6. | 9.None |

REVIEW STRUCTURE YEAR **0**

RENTAL? 0=NO 1=YES **0**

## Sale Data

Sale Date **8/27/2018**

Price **100,000**

Sale Type **1 Land Only**

| | | |
|---|---|---|
| 1.Land | 4.Mobile | 7. |
| 2.L & B | 5.Other | 8. |
| 3.Building | 6. | 9. |

Financing **1 Conventional**

| | | |
|---|---|---|
| 1.Convent | 4.Seller | 7. |
| 2.FHA/VA | 5.Private | 8. |
| 3.Assumed | 6.Cash | 9.Unknown |

Validity **1 Arms Length Sale**

| | | |
|---|---|---|
| 1.Valid | 4.Split | 7.Changes |
| 2.Related | 5.Partial | 8.Other |
| 3.Distress | 6.Exempt | 9.Fr Ffclse |

Verified **1 Buyer**

| | | |
|---|---|---|
| 1.Buyer | 4.Agent | 7.Family |
| 2.Seller | 5.Pub Rec | 8.Other |
| 3.Lender | 6.MLS | 9. |

## Assessment Record

| Year | Land | Buildings | Exempt | Total |
|---|---|---|---|---|
| 2017 | 26,100 | 0 | 0 | 26,100 |
| 2018 | 76,800 | 0 | 0 | 76,800 |
| 2019 | 76,800 | 0 | 0 | 76,800 |
| 2020 | 3,700 | 0 | 0 | 3,700 |

## Land Data

| Front Foot | Type | Effective Frontage | Effective Depth | Influence Factor | Influence Code |
|---|---|---|---|---|---|
| 11.Regular Lot | | | | % | |
| 12.Delta Triangle | | | | % | |
| 13.Nabla Triangle | | | | % | |
| 14.Rear Land | | | | % | |
| 15.Miscellaneous | | | | % | |
| | | | | % | |
| | | | | % | |

| Square Foot | | Square Feet | | |
|---|---|---|---|---|
| 16.Regular Lot | | | % | |
| 17.Secondary Lot | | | % | |
| 18.Excess Land | | | % | |
| 19.Condominium | | | % | |
| 20.Miscellaneous | | | % | |
| | | | % | |
| | | | % | |

| Fract. Acre | | Acreage/Sites | | |
|---|---|---|---|---|
| 21.Homesite (Frac | 21 | 1.00 | 5 % | 6 |
| 22.Baselot (Fract | 24 | 4.00 | 5 % | 6 |
| 23.Misc (Fract) | 25 | 18.10 | 5 % | 6 |
| **Acres** | | | % | |
| 24.Excess Acres 1 | | | % | |
| 25.Excess Acres 5 | | | % | |
| 26.Excess Acres 2 | | | % | |
| 27.Excess Acres 5 | | | % | |
| 28.Excess Acres 1 | | | | |
| 29.Excess acres | | | | |

**Total Acreage** 23.10

### Influence Codes

1.Unimproved
2.Excess Frtg
3.Topography
4.Size/Shape
5.Access
6.Restriction
7.Corner Infl
8.Environment
9.Fract Share
**Acres**
30.Industrial Sit
31.Working Waterf
32.Cultivated Cro
33.Pasture
34.Softwood (Farm
35.Mixed Wood (Fa
36.Hardwood (Farm
37.Softwood
38.Mixed Wood
39.Hardwood
40.Wasteland
41.Gravel Pit
42.Mobile Home Si
43.Location Base
44.Lot Improvemen
45.Waterfront A
46.Lobster Pound

# Hancock 2020

Map Lot 111-005-003 | Account 2205 | Location CROSS ROAD | Card 1 Of 1 | 10/01/2020

| Building Style | | |
|---|---|---|
| 0.Uncoded | 4.Cape | 8.Log |
| 1.Conv. | 5.Garrison | 9.Other |
| 2.Ranch | 6.Colonial | 10.Dutch C |
| 3.R Ranch | 7.Contemp | 11.Farmhou |

| Dwelling Units |
|---|
| Other Units |

| Stories | | |
|---|---|---|
| 1.1 | 4.1.5 | 7.3.5 |
| 2.2 | 5.1.75 | 8. |
| 3.3 | 6.2.5 | 9. |

| Exterior Walls | | |
|---|---|---|
| 0.Uncoded | 4.Asbestos | 8.Stone |
| 1.Wood | 5.Stucco | 9.Other |
| 2.Vin/Al | 6.Brick Ve | 10.Concret |
| 3.Compos. | 7.Solid Br | 12. |

| Roof Surface | | |
|---|---|---|
| 1.Asphalt | 4.Composit | 7. |
| 2.Slate | 5.Wood | 8. |
| 3.Metal | 6.Other | 9. |

| SF Masonry Trim |
|---|
| OPEN-3-CUSTOM |
| OPEN-4-CUSTOM |
| Year Built |
| Year Remodeled |

| Foundation | | |
|---|---|---|
| 1.Concrete | 4.Wood | 7. |
| 2.C Block | 5.Slab | 8. |
| 3.Br/Stone | 6.Piers | 9. |

| Basement | | |
|---|---|---|
| 1.1/4 Bmt | 4.Full Bmt | 7. |
| 2.1/2 Bmt | 5.None | 8. |
| 3.3/4 Bmt | 6. | 9.None |

| Bsmt Gar # Cars |
|---|

| Wet Basement | | |
|---|---|---|
| 1.Dry | 4. | 7. |
| 2.Damp | 5. | 8. |
| 3.Wet | 6. | 9. |

| SF Bsmt Living |
|---|
| Fin Bsmt Grade |
| OPEN-5-CUSTOMIZE |

| Heat Type **100%** | | |
|---|---|---|
| 0.Uncoded | 4.Steam | 8.Fl/Wall |
| 1.HWBB | 5.FWA | 9.No Heat |
| 2.HWCI | 6.GravWA | 10.Radiabt |
| 3.H Pump | 7.Electric | 12. |

| Cool Type **100%** | | |
|---|---|---|
| 1.Refrig | 4.W&C Air | 7. |
| 2.Evapor | 5. | 8. |
| 3.H Pump | 6. | 9.None |

| Kitchen Style | | |
|---|---|---|
| 1.Modern | 4.Obsolete | 7. |
| 2.Typical | 5. | 8. |
| 3.Old Type | 6. | 9.None |

| Bath(s) Style | | |
|---|---|---|
| 1.Modern | 4.Obsolete | 7. |
| 2.Typical | 5. | 8. |
| 3.Old Type | 6. | 9.None |

| # Rooms |
|---|
| # Bedrooms |
| # Full Baths |
| # Half Baths |
| # Addn Fixtures |
| # Fireplaces |

TRIO Software
A Division of Harris Computer Systems

| Layout | | |
|---|---|---|
| 1.Typical | 4. | 7. |
| 2.Inadeq | 5. | 8. |
| 3.Horrid | 6. | 9. |

| Attic | | |
|---|---|---|
| 1.1/4 Fin | 4.Full Fin | 7. |
| 2.1/2 Fin | 5.Fl/Stair | 8. |
| 3.3/4 Fin | 6. | 9.None |

| Insulation | | |
|---|---|---|
| 1.Full | 4.Minimal | 7. |
| 2.Heavy | 5.Partial | 8. |
| 3.Capped | 6. | 9.None |

| Unfinished % |
|---|

| Grade & Factor | | |
|---|---|---|
| 1.E Grade | 4.B Grade | 7.AAA Grad |
| 2.D Grade | 5.A Grade | 8.SC Grade |
| 3.C Grade | 6.AA Grade | 9.Same |

| SQFT (Footprint) |
|---|

| Condition | | |
|---|---|---|
| 1.Poor | 4.Avg | 7.V G |
| 2.Fair | 5.Avg+ | 8.Exc |
| 3.Avg- | 6.Good | 9.Same |

| Phys. % Good |
|---|
| Funct. % Good |

| Functional Code | | |
|---|---|---|
| 1.Incomp | 4.Delap | 7.Seasonal |
| 2.O-Built | 5.Bsmt | 8. |
| 3.Fire | 6.2014 ADJ | 9.None |

| Econ. % Good |
|---|

| Economic Code | | |
|---|---|---|
| 0.None | 3.No Power | 7. |
| 1.Location | 4.Generate | 8. |
| 2.Encroach | 9.None | 9. |

| Entrance Code **0** | | |
|---|---|---|
| 1.Interior | 4.Vacant | 7. |
| 2.Refusal | 5.Estimate | 8. |
| 3.Informed | 6. | 9. |

| Information Code **0** | | |
|---|---|---|
| 1.Owner | 4.Agent | 7. |
| 2.Relative | 5.Estimate | 8. |
| 3.Tenant | 6.Other | 9. |

Date Inspected

## Additions, Outbuildings & Improvements

| Type | Year | Units | Grade | Cond | Phys. | Funct. | Sound Value |
|---|---|---|---|---|---|---|---|
| | | | | | % | % | |
| | | | | | % | % | |
| | | | | | % | % | |
| | | | | | % | % | |
| | | | | | % | % | |
| | | | | | % | % | |
| | | | | | % | % | |
| | | | | | % | % | |
| | | | | | % | % | |
| | | | | | % | % | |

1.One Story Fram
2.Two Story Fram
3.Three Story Fr
4.1 & 1/2 Story
5.1 & 3/4 Story
6.2 & 1/2 Story
21.Open Frame Por
22.Encl Frame Por
23.Frame Garage
24.Frame Shed
25.Frame Bay Wind
26.1SFr Overhang
27.Unfin Basement
28.Unfinished Att
29.Finished Attic

Map Lot 111-006 Account 654 Location 252 CROSS ROAD Card 1 Of 1 10/01/2020

PAGE, MICHAEL W
PAGE, KATHLEEN M
252 CROSS RD.
HANCOCK ME 04640

B2615P118

Inspection Witnessed By:

X Date

| No./Date | Description | Date Insp. |
|---|---|---|
| | | |
| | | |
| | | |

Notes:

**Hancock 2020**

## Property Data

Neighborhood **26 Neighborhood 26**

Tree Growth Year **0**

TREE GROWTH RECERTIFY **0**

STATE SALE CODE **0**

Zone/Land Use **11 Residential**

Secondary Zone

Topography **9** **9**

1.Level 4.Below St 7.
2.Rolling 5.Low 8.
3.Above St 6.Swampy 9.

Utilities **9 None** **9 None**

1.Public 4.Dr Well 7.Cesspool
2.Water 5.Dug Well 8.
3.Sewer 6.Septic 9.None

Street **9 None**

1.Paved 4.Proposed 7.
2.Semi Imp 5. 8.
3.Gravel 6. 9.None

REVIEW STRUCTURE YEAR **0**

RENTAL? 0=NO 1=YES **0**

## Sale Data

Sale Date

Price

Sale Type

1.Land 4.Mobile 7.
2.L & B 5.Other 8.
3.Building 6. 9.

Financing

1.Convent 4.Seller 7.
2.FHA/VA 5.Private 8.
3.Assumed 6.Cash 9.Unknown

Validity

1.Valid 4.Split 7.Changes
2.Related 5.Partial 8.Other
3.Distress 6.Exempt 9.Fr Ffclse

Verified

1.Buyer 4.Agent 7.Family
2.Seller 5.Pub Rec 8.Other
3.Lender 6.MLS 9.

## Assessment Record

| Year | Land | Buildings | Exempt | Total |
|---|---|---|---|---|
| 2007 | 39,100 | 84,700 | 13,000 | 110,800 |
| 2008 | 39,100 | 84,700 | 13,000 | 110,800 |
| 2009 | 39,100 | 84,700 | 13,000 | 110,800 |
| 2010 | 39,100 | 84,700 | 10,000 | 113,800 |
| 2011 | 39,100 | 84,700 | 10,000 | 113,800 |
| 2012 | 39,100 | 84,700 | 10,000 | 113,800 |
| 2013 | 39,100 | 84,700 | 10,000 | 113,800 |
| 2014 | 39,100 | 76,300 | 10,800 | 104,600 |
| 2015 | 39,100 | 76,300 | 11,000 | 104,400 |
| 2016 | 39,100 | 76,300 | 16,500 | 98,900 |
| 2017 | 39,100 | 76,300 | 22,000 | 93,400 |
| 2018 | 39,100 | 76,300 | 22,000 | 93,400 |
| 2019 | 39,100 | 76,300 | 22,000 | 93,400 |
| 2020 | 39,200 | 76,300 | 25,000 | 90,500 |

## Land Data

| Front Foot | Type | Effective Frontage | Effective Depth | Influence Factor | Influence Code |
|---|---|---|---|---|---|
| 11.Regular Lot | | | | % | |
| 12.Delta Triangle | | | | % | |
| 13.Nabla Triangle | | | | % | |
| 14.Rear Land | | | | % | |
| 15.Miscellaneous | | | | % | |
| | | | | % | |
| | | | | % | |
| **Square Foot** | | **Square Feet** | | | |
| 16.Regular Lot | | | | % | |
| 17.Secondary Lot | | | | % | |
| 18.Excess Land | | | | % | |
| 19.Condominium | | | | % | |
| 20.Miscellaneous | | | | % | |
| | | | | % | |
| | | | | % | |
| **Fract. Acre** | | **Acreage/Sites** | | | |
| 21.Homesite (Frac | 21 | 1.00 | | 100 % | 0 |
| 22.Baselot (Fract | 40 | 3.00 | | 100 % | 0 |
| 23.Misc (Fract) | 44 | 1.00 | | 100 % | 0 |
| **Acres** | | | | % | |
| 24.Excess Acres 1 | | | | % | |
| 25.Excess Acres 5 | | | | % | |
| 26.Excess Acres 2 | | | | % | |
| 27.Excess Acres 5 | | | | % | |
| 28.Excess Acres 1 | | | | % | |
| 29.Excess acres | | | | % | |

**Total Acreage** 4.00

### Influence Codes

1.Unimproved
2.Excess Frtg
3.Topography
4.Size/Shape
5.Access
6.Restriction
7.Corner Infl
8.Environment
9.Fract Share
**Acres**
30.Industrial Sit
31.Working Waterf
32.Cultivated Cro
33.Pasture
34.Softwood (Farm
35.Mixed Wood (Fa
36.Hardwood (Farm
37.Softwood
38.Mixed Wood
39.Hardwood
40.Wasteland
41.Gravel Pit
42.Mobile Home Si
43.Location Base
44.Lot Improvemen
45.Waterfront A
46.Lobster Pound

# Hancock 2020

Map Lot 111-006 | Account 654 | Location 252 CROSS ROAD | Card 1 Of 1 | 10/01/2020

| | | |
|---|---|---|
| Building Style | **1 Conventional** | |
| 0.Uncoded | 4.Cape | 8.Log |
| 1.Conv. | 5.Garrison | 9.Other |
| 2.Ranch | 6.Colonial | 10.Dutch C |
| 3.R Ranch | 7.Contemp | 11.Farmhou |
| Dwelling Units | **1** | |
| Other Units | **0** | |
| Stories | **5 One & 3/4 Story** | |
| 1.1 | 4.1.5 | 7.3.5 |
| 2.2 | 5.1.75 | 8. |
| 3.3 | 6.2.5 | 9. |
| Exterior Walls | **1 Wood Siding** | |
| 0.Uncoded | 4.Asbestos | 8.Stone |
| 1.Wood | 5.Stucco | 9.Other |
| 2.Vin/Al | 6.Brick Ve | 10.Concret |
| 3.Compos. | 7.Solid Br | 12. |
| Roof Surface | **1 Asphalt Shingles** | |
| 1.Asphalt | 4.Composit | 7. |
| 2.Slate | 5.Wood | 8. |
| 3.Metal | 6.Other | 9. |
| SF Masonry Trim | **0** | |
| OPEN-3-CUSTOM | **0** | |
| OPEN-4-CUSTOM | **0** | |
| Year Built | **1914** | |
| Year Remodeled | **0** | |
| Foundation | **1 Concrete** | |
| 1.Concrete | 4.Wood | 7. |
| 2.C Block | 5.Slab | 8. |
| 3.Br/Stone | 6.Piers | 9. |
| Basement | **4 Full Basement** | |
| 1.1/4 Bmt | 4.Full Bmt | 7. |
| 2.1/2 Bmt | 5.None | 8. |
| 3.3/4 Bmt | 6. | 9.None |
| Bsmt Gar # Cars | **0** | |
| Wet Basement | **1 Dry Basement** | |
| 1.Dry | 4. | 7. |
| 2.Damp | 5. | 8. |
| 3.Wet | 6. | 9. |

| | | |
|---|---|---|
| SF Bsmt Living | **0** | |
| Fin Bsmt Grade | **0 0** | |
| OPEN-5-CUSTOMIZE | **0** | |
| Heat Type | **100%** | **1 Hot Water BB** |
| 0.Uncoded | 4.Steam | 8.Fl/Wall |
| 1.HWBB | 5.FWA | 9.No Heat |
| 2.HWCI | 6.GravWA | 10.Radiabt |
| 3.H Pump | 7.Electric | 12. |
| Cool Type | **100%** | **9 None** |
| 1.Refrig | 4.W&C Air | 7. |
| 2.Evapor | 5. | 8. |
| 3.H Pump | 6. | 9.None |
| Kitchen Style | **2 Typical** | |
| 1.Modern | 4.Obsolete | 7. |
| 2.Typical | 5. | 8. |
| 3.Old Type | 6. | 9.None |
| Bath(s) Style | **2 Typical Bath(s)** | |
| 1.Modern | 4.Obsolete | 7. |
| 2.Typical | 5. | 8. |
| 3.Old Type | 6. | 9.None |
| # Rooms | **4** | |
| # Bedrooms | **2** | |
| # Full Baths | **1** | |
| # Half Baths | **0** | |
| # Addn Fixtures | **0** | |
| # Fireplaces | **0** | |

TRIO Software
A Division of Harris Computer Systems

| | | |
|---|---|---|
| Layout | **1 Typical** | |
| 1.Typical | 4. | 7. |
| 2.Inadeq | 5. | 8. |
| 3.Horrid | 6. | 9. |
| Attic | **9 None** | |
| 1.1/4 Fin | 4.Full Fin | 7. |
| 2.1/2 Fin | 5.Fl/Stair | 8. |
| 3.3/4 Fin | 6. | 9.None |
| Insulation | **1 Full** | |
| 1.Full | 4.Minimal | 7. |
| 2.Heavy | 5.Partial | 8. |
| 3.Capped | 6. | 9.None |
| Unfinished % | **0%** | |
| Grade & Factor | **3 Average 100%** | |
| 1.E Grade | 4.B Grade | 7.AAA Grad |
| 2.D Grade | 5.A Grade | 8.SC Grade |
| 3.C Grade | 6.AA Grade | 9.Same |
| SQFT (Footprint) | **624** | |
| Condition | **5 Above Average** | |
| 1.Poor | 4.Avg | 7.V G |
| 2.Fair | 5.Avg+ | 8.Exc |
| 3.Avg- | 6.Good | 9.Same |
| Phys. % Good | **0%** | |
| Funct. % Good | **90%** | |
| Functional Code | **6 2014 ADJUSTMENT** | |
| 1.Incomp | 4.Delap | 7.Seasonal |
| 2.O-Built | 5.Bsmt | 8. |
| 3.Fire | 6.2014 ADJ | 9.None |
| Econ. % Good | **100%** | |
| Economic Code | **None** | |
| 0.None | 3.No Power | 7. |
| 1.Location | 4.Generate | 8. |
| 2.Encroach | 9.None | 9. |
| Entrance Code | **0** | |
| 1.Interior | 4.Vacant | 7. |
| 2.Refusal | 5.Estimate | 8. |
| 3.Informed | 6. | 9. |
| Information Code | **0** | |
| 1.Owner | 4.Agent | 7. |
| 2.Relative | 5.Estimate | 8. |
| 3.Tenant | 6.Other | 9. |

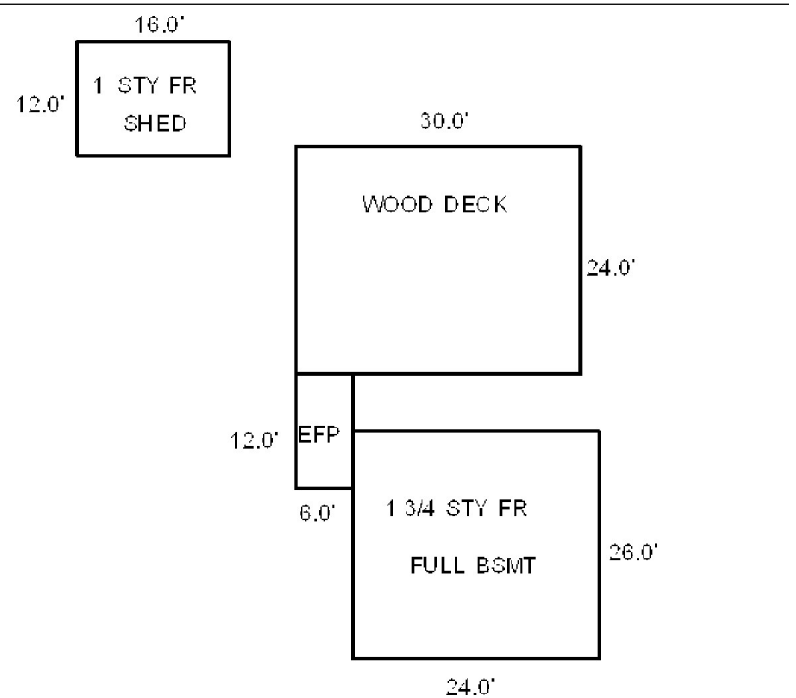


Date Inspected

## Additions, Outbuildings & Improvements

| Type | Year | Units | Grade | Cond | Phys. | Funct. | Sound Value |
|---|---|---|---|---|---|---|---|
| 24 Frame Shed | 0 | 192 | 0 0 | 0 | 0 % | 0 % | |
| 68 Wood Deck | 0 | 720 | 0 0 | 0 | 0 % | 0 % | |
| 22 Encl Frame Porch | 0 | 72 | 2 100 | 4 | 0 % | 100 % | |
| | | | | | % | % | |
| | | | | | % | % | |
| | | | | | % | % | |
| | | | | | % | % | |
| | | | | | % | % | |
| | | | | | % | % | |
| | | | | | % | % | |

1.One Story Fram
2.Two Story Fram
3.Three Story Fr
4.1 & 1/2 Story
5.1 & 3/4 Story
6.2 & 1/2 Story
21.Open Frame Por
22.Encl Frame Por
23.Frame Garage
24.Frame Shed
25.Frame Bay Wind
26.1SFr Overhang
27.Unfin Basement
28.Unfinished Att
29.Finished Attic

Map Lot 111-007 Account 1196 Location 260 CROSS ROAD Card 1 Of 1 10/01/2020

O'MEARA, MICHAEL
O'MEARA, CARLA
19467 SILVER OAK DRIVE
FORT MYERS FL 33967

B3282P271 B5382P73 B5629P252 B6280P85

Previous Owner
MORIN, DYLAN & MANDY
260 CROSS ROAD

HANCOCK ME 04640
Sale Date: 9/12/2014

Previous Owner
CURTISS, JAMES & ELLEN
P O BOX 82

FARMINGTON ME 04938
Sale Date: 6/03/2011

Previous Owner
JOHNSTON, TODD B. & LISA M.S.
P O BOX 438

HANCOCK ME 04640
Sale Date: 3/11/2010

Inspection Witnessed By:

X Date

| No./Date | Description | Date Insp. |
|---|---|---|
| | | |
| | | |
| | | |

Notes:
2020 - NOTICED HOMESTEAD EX ON ACCOUNT - OWNER NON-RESIDENT - REMOVED NOT SUPPLEMENTING

**Hancock 2020**

## Property Data

Neighborhood **24 Neighborhood 24**

Tree Growth Year **0**

TREE GROWTH RECERTIFY **0**

STATE SALE CODE **0**

Zone/Land Use **11 Residential**

Secondary Zone

Topography

1.Level 4.Below St 7.
2.Rolling 5.Low 8.
3.Above St 6.Swampy 9.

Utilities

1.Public 4.Dr Well 7.Cesspool
2.Water 5.Dug Well 8.
3.Sewer 6.Septic 9.None

Street

1.Paved 4.Proposed 7.
2.Semi Imp 5. 8.
3.Gravel 6. 9.None

REVIEW STRUCTURE YEAR **0**

RENTAL? 0=NO 1=YES **0**

## Sale Data

Sale Date **9/12/2014**

Price **190,000**

Sale Type **2 Land & Buildings**

1.Land 4.Mobile 7.
2.L & B 5.Other 8.
3.Building 6. 9.

Financing **9 Unknown**

1.Convent 4.Seller 7.
2.FHA/VA 5.Private 8.
3.Assumed 6.Cash 9.Unknown

Validity **1 Arms Length Sale**

1.Valid 4.Split 7.Changes
2.Related 5.Partial 8.Other
3.Distress 6.Exempt 9.Fr Ffclse

Verified **5 Public Record**

1.Buyer 4.Agent 7.Family
2.Seller 5.Pub Rec 8.Other
3.Lender 6.MLS 9.

## Assessment Record

| Year | Land | Buildings | Exempt | Total |
|---|---|---|---|---|
| 2007 | 39,000 | 217,900 | 13,000 | 243,900 |
| 2008 | 39,000 | 247,000 | 13,000 | 273,000 |
| 2009 | 39,000 | 247,000 | 13,000 | 273,000 |
| 2010 | 39,000 | 247,000 | 0 | 286,000 |
| 2011 | 39,000 | 247,000 | 0 | 286,000 |
| 2012 | 39,000 | 247,000 | 0 | 286,000 |
| 2013 | 39,000 | 247,000 | 10,000 | 276,000 |
| 2014 | 39,000 | 247,000 | 10,800 | 275,200 |
| 2015 | 39,000 | 247,000 | 11,000 | 275,000 |
| 2016 | 39,000 | 247,000 | 16,500 | 269,500 |
| 2017 | 39,000 | 246,600 | 22,000 | 263,600 |
| 2018 | 39,000 | 246,600 | 22,000 | 263,600 |
| 2019 | 39,000 | 246,600 | 22,000 | 263,600 |
| 2020 | 39,000 | 246,600 | 0 | 285,600 |

## Land Data

| Front Foot | Type | Effective Frontage | Effective Depth | Influence Factor | Influence Code |
|---|---|---|---|---|---|
| 11.Regular Lot | | | | % | |
| 12.Delta Triangle | | | | % | |
| 13.Nabla Triangle | | | | % | |
| 14.Rear Land | | | | % | |
| 15.Miscellaneous | | | | % | |
| | | | | % | |
| | | | | % | |
| **Square Foot** | | **Square Feet** | | | |
| 16.Regular Lot | | | | % | |
| 17.Secondary Lot | | | | % | |
| 18.Excess Land | | | | % | |
| 19.Condominium | | | | % | |
| 20.Miscellaneous | | | | % | |
| | | | | % | |
| | | | | % | |
| **Fract. Acre** | | **Acreage/Sites** | | | |
| 21.Homesite (Frac | 21 | 1.00 | 100 | % | 0 |
| 22.Baselot (Fract | 40 | 0.30 | 100 | % | 0 |
| 23.Misc (Fract) | 44 | 1.00 | 100 | % | 0 |
| **Acres** | | | | % | |
| 24.Excess Acres 1 | | | | % | |
| 25.Excess Acres 5 | | | | % | |
| 26.Excess Acres 2 | | | | % | |
| 27.Excess Acres 5 | | | | % | |
| 28.Excess Acres 1 | | | | % | |
| 29.Excess acres | | | | % | |

**Total Acreage** 1.30

### Influence Codes

1.Unimproved
2.Excess Frtg
3.Topography
4.Size/Shape
5.Access
6.Restriction
7.Corner Infl
8.Environment
9.Fract Share
**Acres**
30.Industrial Sit
31.Working Waterf
32.Cultivated Cro
33.Pasture
34.Softwood (Farm
35.Mixed Wood (Fa
36.Hardwood (Farm
37.Softwood
38.Mixed Wood
39.Hardwood
40.Wasteland
41.Gravel Pit
42.Mobile Home Si
43.Location Base
44.Lot Improvemen
45.Waterfront A
46.Lobster Pound

# Hancock 2020

Map Lot 111-007 | Account 1196 | Location 260 CROSS ROAD | Card 1 Of 1 | 10/01/2020

| | | |
|---|---|---|
| Building Style | **4 Cape** | |
| 0.Uncoded | 4.Cape | 8.Log |
| 1.Conv. | 5.Garrison | 9.Other |
| 2.Ranch | 6.Colonial | 10.Dutch C |
| 3.R Ranch | 7.Contemp | 11.Farmhou |
| Dwelling Units | **1** | |
| Other Units | **0** | |
| Stories | **4 One & 1/2 Story** | |
| 1.1 | 4.1.5 | 7.3.5 |
| 2.2 | 5.1.75 | 8. |
| 3.3 | 6.2.5 | 9. |
| Exterior Walls | **2 Vinyl/Aluminum** | |
| 0.Uncoded | 4.Asbestos | 8.Stone |
| 1.Wood | 5.Stucco | 9.Other |
| 2.Vin/Al | 6.Brick Ve | 10.Concret |
| 3.Compos. | 7.Solid Br | 12. |
| Roof Surface | **1 Asphalt Shingles** | |
| 1.Asphalt | 4.Composit | 7. |
| 2.Slate | 5.Wood | 8. |
| 3.Metal | 6.Other | 9. |
| SF Masonry Trim | **0** | |
| OPEN-3-CUSTOM | **0** | |
| OPEN-4-CUSTOM | **0** | |
| Year Built | **2001** | |
| Year Remodeled | **0** | |
| Foundation | **1 Concrete** | |
| 1.Concrete | 4.Wood | 7. |
| 2.C Block | 5.Slab | 8. |
| 3.Br/Stone | 6.Piers | 9. |
| Basement | **4 Full Basement** | |
| 1.1/4 Bmt | 4.Full Bmt | 7. |
| 2.1/2 Bmt | 5.None | 8. |
| 3.3/4 Bmt | 6. | 9.None |
| Bsmt Gar # Cars | **0** | |
| Wet Basement | **1 Dry Basement** | |
| 1.Dry | 4. | 7. |
| 2.Damp | 5. | 8. |
| 3.Wet | 6. | 9. |

| | | |
|---|---|---|
| SF Bsmt Living | **0** | |
| Fin Bsmt Grade | **0 0** | |
| OPEN-5-CUSTOMIZE | **0** | |
| Heat Type | **100%** | **1 Hot Water BB** |
| 0.Uncoded | 4.Steam | 8.Fl/Wall |
| 1.HWBB | 5.FWA | 9.No Heat |
| 2.HWCI | 6.GravWA | 10.Radiabt |
| 3.H Pump | 7.Electric | 12. |
| Cool Type | **100%** | **9 None** |
| 1.Refrig | 4.W&C Air | 7. |
| 2.Evapor | 5. | 8. |
| 3.H Pump | 6. | 9.None |
| Kitchen Style | **2 Typical** | |
| 1.Modern | 4.Obsolete | 7. |
| 2.Typical | 5. | 8. |
| 3.Old Type | 6. | 9.None |
| Bath(s) Style | **2 Typical Bath(s)** | |
| 1.Modern | 4.Obsolete | 7. |
| 2.Typical | 5. | 8. |
| 3.Old Type | 6. | 9.None |
| # Rooms | **5** | |
| # Bedrooms | **2** | |
| # Full Baths | **2** | |
| # Half Baths | **0** | |
| # Addn Fixtures | **0** | |
| # Fireplaces | **0** | |

TRIO Software
A Division of Harris Computer Systems

| | | |
|---|---|---|
| Layout | **1 Typical** | |
| 1.Typical | 4. | 7. |
| 2.Inadeq | 5. | 8. |
| 3.Horrid | 6. | 9. |
| Attic | **9 None** | |
| 1.1/4 Fin | 4.Full Fin | 7. |
| 2.1/2 Fin | 5.Fl/Stair | 8. |
| 3.3/4 Fin | 6. | 9.None |
| Insulation | **1 Full** | |
| 1.Full | 4.Minimal | 7. |
| 2.Heavy | 5.Partial | 8. |
| 3.Capped | 6. | 9.None |
| Unfinished % | **0%** | |
| Grade & Factor | **3 Average 110%** | |
| 1.E Grade | 4.B Grade | 7.AAA Grad |
| 2.D Grade | 5.A Grade | 8.SC Grade |
| 3.C Grade | 6.AA Grade | 9.Same |
| SQFT (Footprint) | **1120** | |
| Condition | **4 Average** | |
| 1.Poor | 4.Avg | 7.V G |
| 2.Fair | 5.Avg+ | 8.Exc |
| 3.Avg- | 6.Good | 9.Same |
| Phys. % Good | **0%** | |
| Funct. % Good | **100%** | |
| Functional Code | **4 Delapidation** | |
| 1.Incomp | 4.Delap | 7.Seasonal |
| 2.O-Built | 5.Bsmt | 8. |
| 3.Fire | 6.2014 ADJ | 9.None |
| Econ. % Good | **100%** | |
| Economic Code | **None** | |
| 0.None | 3.No Power | 7. |
| 1.Location | 4.Generate | 8. |
| 2.Encroach | 9.None | 9. |
| Entrance Code | **0** | |
| 1.Interior | 4.Vacant | 7. |
| 2.Refusal | 5.Estimate | 8. |
| 3.Informed | 6. | 9. |
| Information Code | **0** | |
| 1.Owner | 4.Agent | 7. |
| 2.Relative | 5.Estimate | 8. |
| 3.Tenant | 6.Other | 9. |

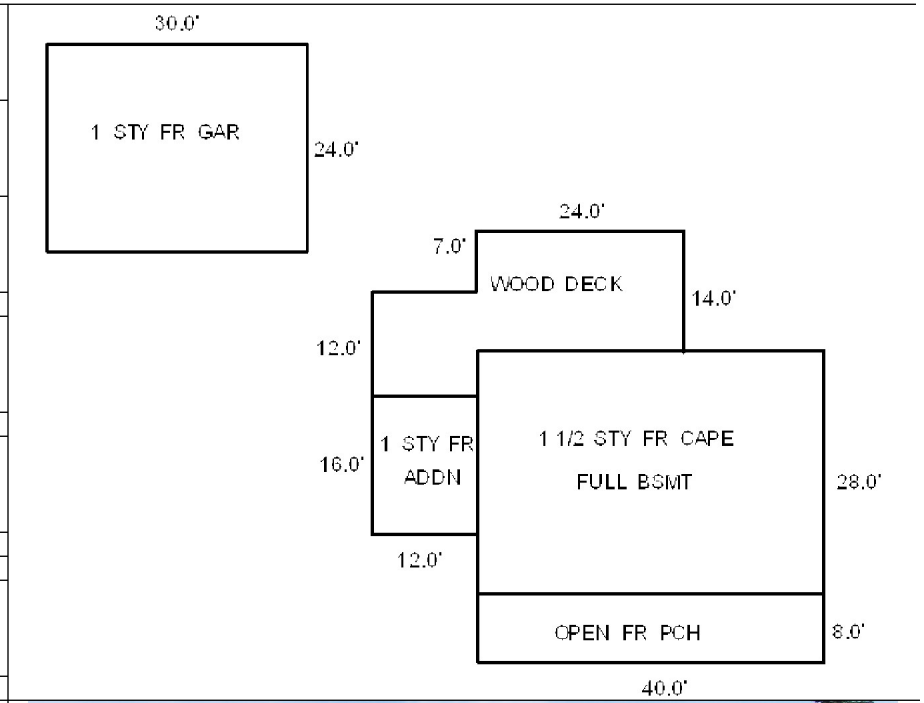


Date Inspected

## Additions, Outbuildings & Improvements

| Type | Year | Units | Grade | Cond | Phys. | Funct. | Sound Value |
|---|---|---|---|---|---|---|---|
| 87 1 3/4 STY FR | 2007 | 720 | 3 100 | 4 | 0 % | 100 % | |
| 68 Wood Deck | 0 | 480 | 0 0 | 0 | 0 % | 0 % | |
| 1 One Story Frame | 0 | 192 | 0 0 | 0 | 0 % | 0 % | |
| 21 Open Frame | 0 | 320 | 0 0 | 0 | 0 % | 0 % | |
| | | | | | % | % | |
| | | | | | % | % | |
| | | | | | % | % | |
| | | | | | % | % | |
| | | | | | % | % | |
| | | | | | % | % | |

1.One Story Fram
2.Two Story Fram
3.Three Story Fr
4.1 & 1/2 Story
5.1 & 3/4 Story
6.2 & 1/2 Story
21.Open Frame Por
22.Encl Frame Por
23.Frame Garage
24.Frame Shed
25.Frame Bay Wind
26.1SFr Overhang
27.Unfin Basement
28.Unfinished Att
29.Finished Attic

Map Lot 111-008 Account 1679 Location 264 CROSS ROAD Card 1 Of 1 10/01/2020

NODDIN, KENNETH W, TRUSTEE
592 POINT ROAD
HANCOCK ME 04640

B2881P292 B6630P264

Previous Owner
NODDIN, SUSAN
592 POINT ROAD

HANCOCK ME 04640
Sale Date: 9/07/2016

Previous Owner
HILL, GLADYS M.
264 CROSS ROAD

HANCOCK ME 04640
Sale Date: 12/23/2004

Inspection Witnessed By:

X Date

| No./Date | Description | Date Insp. |
|---|---|---|
| | | |
| | | |
| | | |

Notes:

MS. HILL CALL 12/27/04. SHE SOLD HER HOME TO MR. AND MRS. NODDIN ON DECEMBER 23, 2004 THROUGH T&B TITLE.

**Hancock 2020**

## Property Data

Neighborhood **24 Neighborhood 24**

Tree Growth Year **0**

TREE GROWTH RECERTIFY **0**

STATE SALE CODE **0**

Zone/Land Use **11 Residential**

Secondary Zone

Topography

1.Level 4.Below St 7.
2.Rolling 5.Low 8.
3.Above St 6.Swampy 9.

Utilities

1.Public 4.Dr Well 7.Cesspool
2.Water 5.Dug Well 8.
3.Sewer 6.Septic 9.None

Street

1.Paved 4.Proposed 7.
2.Semi Imp 5. 8.
3.Gravel 6. 9.None

REVIEW STRUCTURE YEAR **0**

RENTAL? 0=NO 1=YES **1**

## Sale Data

Sale Date **9/07/2016**

Price

Sale Type **2 Land & Buildings**

1.Land 4.Mobile 7.
2.L & B 5.Other 8.
3.Building 6. 9.

Financing **9 Unknown**

1.Convent 4.Seller 7.
2.FHA/VA 5.Private 8.
3.Assumed 6.Cash 9.Unknown

Validity **2 Related Parties**

1.Valid 4.Split 7.Changes
2.Related 5.Partial 8.Other
3.Distress 6.Exempt 9.Fr Ffclse

Verified **5 Public Record**

1.Buyer 4.Agent 7.Family
2.Seller 5.Pub Rec 8.Other
3.Lender 6.MLS 9.

## Assessment Record

| Year | Land | Buildings | Exempt | Total |
|---|---|---|---|---|
| 2007 | 36,400 | 107,800 | 0 | 144,200 |
| 2008 | 36,400 | 107,800 | 0 | 144,200 |
| 2009 | 36,400 | 107,800 | 0 | 144,200 |
| 2010 | 36,400 | 107,800 | 0 | 144,200 |
| 2011 | 36,400 | 107,800 | 0 | 144,200 |
| 2012 | 36,400 | 107,800 | 0 | 144,200 |
| 2013 | 36,400 | 107,800 | 0 | 144,200 |
| 2014 | 36,400 | 97,000 | 0 | 133,400 |
| 2015 | 36,400 | 97,000 | 0 | 133,400 |
| 2016 | 36,400 | 97,000 | 0 | 133,400 |
| 2017 | 36,400 | 97,000 | 0 | 133,400 |
| 2018 | 36,400 | 97,000 | 0 | 133,400 |
| 2019 | 36,400 | 97,000 | 0 | 133,400 |
| 2020 | 36,400 | 97,000 | 0 | 133,400 |

## Land Data

| Front Foot | Type | Effective Frontage | Effective Depth | Influence Factor | Influence Code |
|---|---|---|---|---|---|
| 11.Regular Lot | | | | % | |
| 12.Delta Triangle | | | | % | |
| 13.Nabla Triangle | | | | % | |
| 14.Rear Land | | | | % | |
| 15.Miscellaneous | | | | % | |
| | | | | % | |
| | | | | % | |
| **Square Foot** | | **Square Feet** | | | |
| 16.Regular Lot | | | | % | |
| 17.Secondary Lot | | | | % | |
| 18.Excess Land | | | | % | |
| 19.Condominium | | | | % | |
| 20.Miscellaneous | | | | % | |
| | | | | % | |
| | | | | % | |
| **Fract. Acre** | | **Acreage/Sites** | | | |
| 21.Homesite (Frac | 21 | | 0.80 | 100 % | 0 |
| 22.Baselot (Fract | 44 | | 1.00 | 100 % | 0 |
| 23.Misc (Fract) | | | | % | |
| **Acres** | | | | % | |
| 24.Excess Acres 1 | | | | % | |
| 25.Excess Acres 5 | | | | % | |
| 26.Excess Acres 2 | | | | % | |
| 27.Excess Acres 5 | | | | % | |
| 28.Excess Acres 1 | | | | % | |
| 29.Excess acres | | | | % | |

**Total Acreage** 0.80

**Influence Codes**

1.Unimproved
2.Excess Frtg
3.Topography
4.Size/Shape
5.Access
6.Restriction
7.Corner Infl
8.Environment
9.Fract Share
**Acres**
30.Industrial Sit
31.Working Waterf
32.Cultivated Cro
33.Pasture
34.Softwood (Farm
35.Mixed Wood (Fa
36.Hardwood (Farm
37.Softwood
38.Mixed Wood
39.Hardwood
40.Wasteland
41.Gravel Pit
42.Mobile Home Si
43.Location Base
44.Lot Improvemen
45.Waterfront A
46.Lobster Pound

# Hancock 2020

Map Lot 111-008 | Account 1679 | Location 264 CROSS ROAD | Card 1 Of 1 | 10/01/2020

| | | |
|---|---|---|
| Building Style **2 Ranch** | | |
| 0.Uncoded | 4.Cape | 8.Log |
| 1.Conv. | 5.Garrison | 9.Other |
| 2.Ranch | 6.Colonial | 10.Dutch C |
| 3.R Ranch | 7.Contemp | 11.Farmhou |
| Dwelling Units **1** | | |
| Other Units **0** | | |
| Stories **1 One Story** | | |
| 1.1 | 4.1.5 | 7.3.5 |
| 2.2 | 5.1.75 | 8. |
| 3.3 | 6.2.5 | 9. |
| Exterior Walls **1 Wood Siding** | | |
| 0.Uncoded | 4.Asbestos | 8.Stone |
| 1.Wood | 5.Stucco | 9.Other |
| 2.Vin/Al | 6.Brick Ve | 10.Concret |
| 3.Compos. | 7.Solid Br | 12. |
| Roof Surface **1 Asphalt Shingles** | | |
| 1.Asphalt | 4.Composit | 7. |
| 2.Slate | 5.Wood | 8. |
| 3.Metal | 6.Other | 9. |
| SF Masonry Trim **0** | | |
| OPEN-3-CUSTOM **0** | | |
| OPEN-4-CUSTOM **0** | | |
| Year Built **1974** | | |
| Year Remodeled **1992** | | |
| Foundation **1 Concrete** | | |
| 1.Concrete | 4.Wood | 7. |
| 2.C Block | 5.Slab | 8. |
| 3.Br/Stone | 6.Piers | 9. |
| Basement **4 Full Basement** | | |
| 1.1/4 Bmt | 4.Full Bmt | 7. |
| 2.1/2 Bmt | 5.None | 8. |
| 3.3/4 Bmt | 6. | 9.None |
| Bsmt Gar # Cars **0** | | |
| Wet Basement **1 Dry Basement** | | |
| 1.Dry | 4. | 7. |
| 2.Damp | 5. | 8. |
| 3.Wet | 6. | 9. |

| | | |
|---|---|---|
| SF Bsmt Living **0** | | |
| Fin Bsmt Grade **0 0** | | |
| OPEN-5-CUSTOMIZE **0** | | |
| Heat Type **100% 1 Hot Water BB** | | |
| 0.Uncoded | 4.Steam | 8.Fl/Wall |
| 1.HWBB | 5.FWA | 9.No Heat |
| 2.HWCI | 6.GravWA | 10.Radiabt |
| 3.H Pump | 7.Electric | 12. |
| Cool Type **100% 9 None** | | |
| 1.Refrig | 4.W&C Air | 7. |
| 2.Evapor | 5. | 8. |
| 3.H Pump | 6. | 9.None |
| Kitchen Style **2 Typical** | | |
| 1.Modern | 4.Obsolete | 7. |
| 2.Typical | 5. | 8. |
| 3.Old Type | 6. | 9.None |
| Bath(s) Style **2 Typical Bath(s)** | | |
| 1.Modern | 4.Obsolete | 7. |
| 2.Typical | 5. | 8. |
| 3.Old Type | 6. | 9.None |
| # Rooms **6** | | |
| # Bedrooms **2** | | |
| # Full Baths **1** | | |
| # Half Baths **0** | | |
| # Addn Fixtures **0** | | |
| # Fireplaces **0** | | |

TRIO Software
A Division of Harris Computer Systems

| | | |
|---|---|---|
| Layout **1 Typical** | | |
| 1.Typical | 4. | 7. |
| 2.Inadeq | 5. | 8. |
| 3.Horrid | 6. | 9. |
| Attic **9 None** | | |
| 1.1/4 Fin | 4.Full Fin | 7. |
| 2.1/2 Fin | 5.Fl/Stair | 8. |
| 3.3/4 Fin | 6. | 9.None |
| Insulation **1 Full** | | |
| 1.Full | 4.Minimal | 7. |
| 2.Heavy | 5.Partial | 8. |
| 3.Capped | 6. | 9.None |
| Unfinished % **0%** | | |
| Grade & Factor **3 Average 100%** | | |
| 1.E Grade | 4.B Grade | 7.AAA Grad |
| 2.D Grade | 5.A Grade | 8.SC Grade |
| 3.C Grade | 6.AA Grade | 9.Same |
| SQFT (Footprint) **1200** | | |
| Condition **4 Average** | | |
| 1.Poor | 4.Avg | 7.V G |
| 2.Fair | 5.Avg+ | 8.Exc |
| 3.Avg- | 6.Good | 9.Same |
| Phys. % Good **0%** | | |
| Funct. % Good **90%** | | |
| Functional Code **6 2014 ADJUSTMENT** | | |
| 1.Incomp | 4.Delap | 7.Seasonal |
| 2.O-Built | 5.Bsmt | 8. |
| 3.Fire | 6.2014 ADJ | 9.None |
| Econ. % Good **100%** | | |
| Economic Code **None** | | |
| 0.None | 3.No Power | 7. |
| 1.Location | 4.Generate | 8. |
| 2.Encroach | 9.None | 9. |
| Entrance Code **0** | | |
| 1.Interior | 4.Vacant | 7. |
| 2.Refusal | 5.Estimate | 8. |
| 3.Informed | 6. | 9. |
| Information Code **0** | | |
| 1.Owner | 4.Agent | 7. |
| 2.Relative | 5.Estimate | 8. |
| 3.Tenant | 6.Other | 9. |

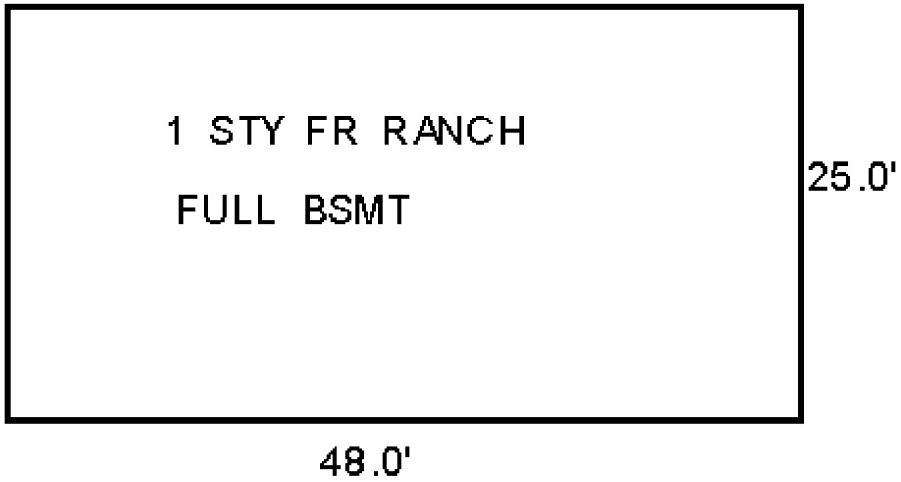

Date Inspected

## Additions, Outbuildings & Improvements

| Type | Year | Units | Grade | Cond | Phys. | Funct. | Sound Value |
|---|---|---|---|---|---|---|---|
| | | | | | % | % | |
| | | | | | % | % | |
| | | | | | % | % | |
| | | | | | % | % | |
| | | | | | % | % | |
| | | | | | % | % | |
| | | | | | % | % | |
| | | | | | % | % | |
| | | | | | % | % | |
| | | | | | % | % | |

1.One Story Fram
2.Two Story Fram
3.Three Story Fr
4.1 & 1/2 Story
5.1 & 3/4 Story
6.2 & 1/2 Story
21.Open Frame Por
22.Encl Frame Por
23.Frame Garage
24.Frame Shed
25.Frame Bay Wind
26.1SFr Overhang
27.Unfin Basement
28.Unfinished Att
29.Finished Attic

Map Lot 111-009 Account 177 Location TAX ACQUIRED IN 1993 Card 1 Of 1 10/01/2020

TOWN OF HANCOCK
PO BOX 68
HANCOCK ME 04640

B1655P660

## Property Data

Neighborhood **24 Neighborhood 24**

Tree Growth Year **0**

TREE GROWTH RECERTIFY **0**

STATE SALE CODE **0**

Zone/Land Use **11 Residential**

Secondary Zone

Topography **9** **9**

1.Level 4.Below St 7.
2.Rolling 5.Low 8.
3.Above St 6.Swampy 9.

Utilities **9 None** **9 None**

1.Public 4.Dr Well 7.Cesspool
2.Water 5.Dug Well 8.
3.Sewer 6.Septic 9.None

Street **9 None**

1.Paved 4.Proposed 7.
2.Semi Imp 5. 8.
3.Gravel 6. 9.None

REVIEW STRUCTURE YEAR **0**

RENTAL? 0=NO 1=YES **0**

## Sale Data

Sale Date

Price

Sale Type

1.Land 4.Mobile 7.
2.L & B 5.Other 8.
3.Building 6. 9.

Financing

1.Convent 4.Seller 7.
2.FHA/VA 5.Private 8.
3.Assumed 6.Cash 9.Unknown

Validity

1.Valid 4.Split 7.Changes
2.Related 5.Partial 8.Other
3.Distress 6.Exempt 9.Fr Ffclse

Verified

1.Buyer 4.Agent 7.Family
2.Seller 5.Pub Rec 8.Other
3.Lender 6.MLS 9.

## Assessment Record

| Year | Land | Buildings | Exempt | Total |
|---|---|---|---|---|
| 2007 | 11,200 | 0 | 0 | 11,200 |
| 2008 | 11,200 | 0 | 11,200 | 0 |
| 2009 | 11,200 | 0 | 11,200 | 0 |
| 2010 | 11,200 | 0 | 11,200 | 0 |
| 2011 | 11,200 | 0 | 11,200 | 0 |
| 2012 | 11,200 | 0 | 11,200 | 0 |
| 2013 | 11,200 | 0 | 11,200 | 0 |
| 2014 | 11,200 | 0 | 11,200 | 0 |
| 2015 | 11,200 | 0 | 11,200 | 0 |
| 2016 | 11,200 | 0 | 11,200 | 0 |
| 2017 | 11,200 | 0 | 11,200 | 0 |
| 2018 | 11,200 | 0 | 11,200 | 0 |
| 2019 | 11,200 | 0 | 11,200 | 0 |
| 2020 | 11,200 | 0 | 11,200 | 0 |

## Land Data

| Front Foot | Type | Effective Frontage | Effective Depth | Influence Factor | Influence Code |
|---|---|---|---|---|---|
| 11.Regular Lot | | | | % | |
| 12.Delta Triangle | | | | % | |
| 13.Nabla Triangle | | | | % | |
| 14.Rear Land | | | | % | |
| 15.Miscellaneous | | | | % | |
| | | | | % | |
| | | | | % | |
| **Square Foot** | | **Square Feet** | | | |
| 16.Regular Lot | | | | % | |
| 17.Secondary Lot | | | | % | |
| 18.Excess Land | | | | % | |
| 19.Condominium | | | | % | |
| 20.Miscellaneous | | | | % | |
| | | | | % | |
| | | | | % | |
| **Fract. Acre** | | **Acreage/Sites** | | | |
| 21.Homesite (Frac | 21 | 0.20 | | 100 % | 0 |
| 22.Baselot (Fract | | | | % | |
| 23.Misc (Fract) | | | | % | |
| **Acres** | | | | % | |
| 24.Excess Acres 1 | | | | % | |
| 25.Excess Acres 5 | | | | % | |
| 26.Excess Acres 2 | | | | % | |
| 27.Excess Acres 5 | | | | % | |
| 28.Excess Acres 1 | | | | % | |
| 29.Excess acres | | | | % | |

**Total Acreage** 0.20

### Influence Codes

1.Unimproved
2.Excess Frtg
3.Topography
4.Size/Shape
5.Access
6.Restriction
7.Corner Infl
8.Environment
9.Fract Share
**Acres**
30.Industrial Sit
31.Working Waterf
32.Cultivated Cro
33.Pasture
34.Softwood (Farm
35.Mixed Wood (Fa
36.Hardwood (Farm
37.Softwood
38.Mixed Wood
39.Hardwood
40.Wasteland
41.Gravel Pit
42.Mobile Home Si
43.Location Base
44.Lot Improvemen
45.Waterfront A
46.Lobster Pound

Inspection Witnessed By:

X Date

| No./Date | Description | Date Insp. |
|---|---|---|
| | | |
| | | |
| | | |

Notes:

**Hancock 2020**

# Hancock 2020

Map Lot 111-009 | Account 177 | Location TAX ACQUIRED IN 1993 | Card 1 Of 1 | 10/01/2020

| | | |
|---|---|---|
| Building Style **0 Uncoded** | | |
| 0.Uncoded | 4.Cape | 8.Log |
| 1.Conv. | 5.Garrison | 9.Other |
| 2.Ranch | 6.Colonial | 10.Dutch C |
| 3.R Ranch | 7.Contemp | 11.Farmhou |
| Dwelling Units **0** | | |
| Other Units **0** | | |
| Stories **0** | | |
| 1.1 | 4.1.5 | 7.3.5 |
| 2.2 | 5.1.75 | 8. |
| 3.3 | 6.2.5 | 9. |
| Exterior Walls **0 Uncoded** | | |
| 0.Uncoded | 4.Asbestos | 8.Stone |
| 1.Wood | 5.Stucco | 9.Other |
| 2.Vin/Al | 6.Brick Ve | 10.Concret |
| 3.Compos. | 7.Solid Br | 12. |
| Roof Surface **0** | | |
| 1.Asphalt | 4.Composit | 7. |
| 2.Slate | 5.Wood | 8. |
| 3.Metal | 6.Other | 9. |
| SF Masonry Trim **0** | | |
| OPEN-3-CUSTOM **0** | | |
| OPEN-4-CUSTOM **0** | | |
| Year Built **0** | | |
| Year Remodeled **0** | | |
| Foundation **0** | | |
| 1.Concrete | 4.Wood | 7. |
| 2.C Block | 5.Slab | 8. |
| 3.Br/Stone | 6.Piers | 9. |
| Basement **0** | | |
| 1.1/4 Bmt | 4.Full Bmt | 7. |
| 2.1/2 Bmt | 5.None | 8. |
| 3.3/4 Bmt | 6. | 9.None |
| Bsmt Gar # Cars **0** | | |
| Wet Basement **0** | | |
| 1.Dry | 4. | 7. |
| 2.Damp | 5. | 8. |
| 3.Wet | 6. | 9. |

| | | |
|---|---|---|
| SF Bsmt Living **0** | | |
| Fin Bsmt Grade **0 0** | | |
| OPEN-5-CUSTOMIZE **0** | | |
| Heat Type **100%** **0 Uncoded** | | |
| 0.Uncoded | 4.Steam | 8.Fl/Wall |
| 1.HWBB | 5.FWA | 9.No Heat |
| 2.HWCI | 6.GravWA | 10.Radiabt |
| 3.H Pump | 7.Electric | 12. |
| Cool Type **0%** **9 None** | | |
| 1.Refrig | 4.W&C Air | 7. |
| 2.Evapor | 5. | 8. |
| 3.H Pump | 6. | 9.None |
| Kitchen Style **0** | | |
| 1.Modern | 4.Obsolete | 7. |
| 2.Typical | 5. | 8. |
| 3.Old Type | 6. | 9.None |
| Bath(s) Style **0** | | |
| 1.Modern | 4.Obsolete | 7. |
| 2.Typical | 5. | 8. |
| 3.Old Type | 6. | 9.None |
| # Rooms **0** | | |
| # Bedrooms **0** | | |
| # Full Baths **0** | | |
| # Half Baths **0** | | |
| # Addn Fixtures **0** | | |
| # Fireplaces **0** | | |

TRIO Software
A Division of Harris Computer Systems

| | | |
|---|---|---|
| Layout **0** | | |
| 1.Typical | 4. | 7. |
| 2.Inadeq | 5. | 8. |
| 3.Horrid | 6. | 9. |
| Attic **0** | | |
| 1.1/4 Fin | 4.Full Fin | 7. |
| 2.1/2 Fin | 5.Fl/Stair | 8. |
| 3.3/4 Fin | 6. | 9.None |
| Insulation **0** | | |
| 1.Full | 4.Minimal | 7. |
| 2.Heavy | 5.Partial | 8. |
| 3.Capped | 6. | 9.None |
| Unfinished % **0%** | | |
| Grade & Factor **0 0%** | | |
| 1.E Grade | 4.B Grade | 7.AAA Grad |
| 2.D Grade | 5.A Grade | 8.SC Grade |
| 3.C Grade | 6.AA Grade | 9.Same |
| SQFT (Footprint) **0** | | |
| Condition **0** | | |
| 1.Poor | 4.Avg | 7.V G |
| 2.Fair | 5.Avg+ | 8.Exc |
| 3.Avg- | 6.Good | 9.Same |
| Phys. % Good **0%** | | |
| Funct. % Good **100%** | | |
| Functional Code **9 None** | | |
| 1.Incomp | 4.Delap | 7.Seasonal |
| 2.O-Built | 5.Bsmt | 8. |
| 3.Fire | 6.2014 ADJ | 9.None |
| Econ. % Good **100%** | | |
| Economic Code **None** | | |
| 0.None | 3.No Power | 7. |
| 1.Location | 4.Generate | 8. |
| 2.Encroach | 9.None | 9. |
| Entrance Code **0** | | |
| 1.Interior | 4.Vacant | 7. |
| 2.Refusal | 5.Estimate | 8. |
| 3.Informed | 6. | 9. |
| Information Code **0** | | |
| 1.Owner | 4.Agent | 7. |
| 2.Relative | 5.Estimate | 8. |
| 3.Tenant | 6.Other | 9. |

Date Inspected

**Additions, Outbuildings & Improvements**

| Type | Year | Units | Grade | Cond | Phys. | Funct. | Sound Value |
|---|---|---|---|---|---|---|---|
| | | | | | % | % | |
| | | | | | % | % | |
| | | | | | % | % | |
| | | | | | % | % | |
| | | | | | % | % | |
| | | | | | % | % | |
| | | | | | % | % | |
| | | | | | % | % | |
| | | | | | % | % | |
| | | | | | % | % | |

1.One Story Fram
2.Two Story Fram
3.Three Story Fr
4.1 & 1/2 Story
5.1 & 3/4 Story
6.2 & 1/2 Story
21.Open Frame Por
22.Encl Frame Por
23.Frame Garage
24.Frame Shed
25.Frame Bay Wind
26.1SFr Overhang
27.Unfin Basement
28.Unfinished Att
29.Finished Attic

Map Lot 111-010 Account 1642 Location 34 FERRY ROAD Card 1 Of 1 10/01/2020

WARNER, CHRISTINA
WARNER, DAVID A
PO BOX 300
ASTORIA OR 97103

B3263P160

## Property Data

Neighborhood **24 Neighborhood 24**

Tree Growth Year **0**

TREE GROWTH RECERTIFY **0**

STATE SALE CODE **0**

Zone/Land Use **11 Residential**

Secondary Zone

Topography

| | | |
|---|---|---|
| 1.Level | 4.Below St | 7. |
| 2.Rolling | 5.Low | 8. |
| 3.Above St | 6.Swampy | 9. |

Utilities

| | | |
|---|---|---|
| 1.Public | 4.Dr Well | 7.Cesspool |
| 2.Water | 5.Dug Well | 8. |
| 3.Sewer | 6.Septic | 9.None |

Street **1 Paved**

| | | |
|---|---|---|
| 1.Paved | 4.Proposed | 7. |
| 2.Semi Imp | 5. | 8. |
| 3.Gravel | 6. | 9.None |

REVIEW STRUCTURE YEAR **0**

RENTAL? 0=NO 1=YES **1**

## Sale Data

Sale Date

Price

Sale Type

| | | |
|---|---|---|
| 1.Land | 4.Mobile | 7. |
| 2.L & B | 5.Other | 8. |
| 3.Building | 6. | 9. |

Financing

| | | |
|---|---|---|
| 1.Convent | 4.Seller | 7. |
| 2.FHA/VA | 5.Private | 8. |
| 3.Assumed | 6.Cash | 9.Unknown |

Validity

| | | |
|---|---|---|
| 1.Valid | 4.Split | 7.Changes |
| 2.Related | 5.Partial | 8.Other |
| 3.Distress | 6.Exempt | 9.Fr Ffclse |

Verified

| | | |
|---|---|---|
| 1.Buyer | 4.Agent | 7.Family |
| 2.Seller | 5.Pub Rec | 8.Other |
| 3.Lender | 6.MLS | 9. |

## Assessment Record

| Year | Land | Buildings | Exempt | Total |
|---|---|---|---|---|
| 2007 | 39,900 | 74,100 | 0 | 114,000 |
| 2008 | 39,900 | 73,900 | 0 | 113,800 |
| 2009 | 39,900 | 73,900 | 0 | 113,800 |
| 2010 | 39,900 | 73,900 | 0 | 113,800 |
| 2011 | 39,900 | 73,900 | 0 | 113,800 |
| 2012 | 39,900 | 73,900 | 0 | 113,800 |
| 2013 | 39,900 | 73,900 | 0 | 113,800 |
| 2014 | 39,900 | 57,700 | 0 | 97,600 |
| 2015 | 39,900 | 57,700 | 0 | 97,600 |
| 2016 | 39,900 | 57,700 | 0 | 97,600 |
| 2017 | 39,900 | 57,700 | 0 | 97,600 |
| 2018 | 39,900 | 57,700 | 0 | 97,600 |
| 2019 | 39,900 | 57,700 | 0 | 97,600 |
| 2020 | 39,900 | 57,700 | 0 | 97,600 |

## Land Data

| Front Foot | Type | Effective Frontage | Effective Depth | Influence Factor | Influence Code |
|---|---|---|---|---|---|
| 11.Regular Lot | | | | % | |
| 12.Delta Triangle | | | | % | |
| 13.Nabla Triangle | | | | % | |
| 14.Rear Land | | | | % | |
| 15.Miscellaneous | | | | % | |
| | | | | % | |
| | | | | % | |
| **Square Foot** | | **Square Feet** | | | |
| 16.Regular Lot | | | | % | |
| 17.Secondary Lot | | | | % | |
| 18.Excess Land | | | | % | |
| 19.Condominium | | | | % | |
| 20.Miscellaneous | | | | % | |
| | | | | % | |
| | | | | % | |
| **Fract. Acre** | | **Acreage/Sites** | | | |
| 21.Homesite (Frac | 21 | 1.00 | 100 | % | 0 |
| 22.Baselot (Fract | 24 | 1.00 | 100 | % | 0 |
| 23.Misc (Fract) | 40 | 2.40 | 100 | % | 0 |
| **Acres** | 44 | 1.00 | 100 | % | 0 |
| 24.Excess Acres 1 | | | | % | |
| 25.Excess Acres 5 | | | | % | |
| 26.Excess Acres 2 | | | | % | |
| 27.Excess Acres 5 | | | | | |
| 28.Excess Acres 1 | | | | | |
| 29.Excess acres | | | | | |

**Total Acreage** 4.40

### Influence Codes

1.Unimproved
2.Excess Frtg
3.Topography
4.Size/Shape
5.Access
6.Restriction
7.Corner Infl
8.Environment
9.Fract Share
**Acres**
30.Industrial Sit
31.Working Waterf
32.Cultivated Cro
33.Pasture
34.Softwood (Farm
35.Mixed Wood (Fa
36.Hardwood (Farm
37.Softwood
38.Mixed Wood
39.Hardwood
40.Wasteland
41.Gravel Pit
42.Mobile Home Si
43.Location Base
44.Lot Improvemen
45.Waterfront A
46.Lobster Pound

Inspection Witnessed By:

X Date

| No./Date | Description | Date Insp. |
|---|---|---|
| | | |
| | | |
| | | |

Notes:

**Hancock 2020**

# Hancock 2020

Map Lot 111-010 | Account 1642 | Location 34 FERRY ROAD | Card 1 Of 1 | 10/01/2020

| | | | |
|---|---|---|---|
| Building Style | **1 Conventional** | | |
| 0.Uncoded | 4.Cape | 8.Log | |
| 1.Conv. | 5.Garrison | 9.Other | |
| 2.Ranch | 6.Colonial | 10.Dutch C | |
| 3.R Ranch | 7.Contemp | 11.Farmhou | |
| Dwelling Units | **1** | | |
| Other Units | **0** | | |
| Stories | **1 One Story** | | |
| 1.1 | 4.1.5 | 7.3.5 | |
| 2.2 | 5.1.75 | 8. | |
| 3.3 | 6.2.5 | 9. | |
| Exterior Walls | **1 Wood Siding** | | |
| 0.Uncoded | 4.Asbestos | 8.Stone | |
| 1.Wood | 5.Stucco | 9.Other | |
| 2.Vin/Al | 6.Brick Ve | 10.Concret | |
| 3.Compos. | 7.Solid Br | 12. | |
| Roof Surface | **1 Asphalt Shingles** | | |
| 1.Asphalt | 4.Composit | 7. | |
| 2.Slate | 5.Wood | 8. | |
| 3.Metal | 6.Other | 9. | |
| SF Masonry Trim | **0** | | |
| OPEN-3-CUSTOM | **0** | | |
| OPEN-4-CUSTOM | **0** | | |
| Year Built | **1921** | | |
| Year Remodeled | **0** | | |
| Foundation | **1 Concrete** | | |
| 1.Concrete | 4.Wood | 7. | |
| 2.C Block | 5.Slab | 8. | |
| 3.Br/Stone | 6.Piers | 9. | |
| Basement | **1 1/4 Basement** | | |
| 1.1/4 Bmt | 4.Full Bmt | 7. | |
| 2.1/2 Bmt | 5.None | 8. | |
| 3.3/4 Bmt | 6. | 9.None | |
| Bsmt Gar # Cars | **0** | | |
| Wet Basement | **1 Dry Basement** | | |
| 1.Dry | 4. | 7. | |
| 2.Damp | 5. | 8. | |
| 3.Wet | 6. | 9. | |

| | | | |
|---|---|---|---|
| SF Bsmt Living | **0** | | |
| Fin Bsmt Grade | **0 0** | | |
| OPEN-5-CUSTOMIZE | **0** | | |
| Heat Type | **100%** | **1 Hot Water BB** | |
| 0.Uncoded | 4.Steam | 8.Fl/Wall | |
| 1.HWBB | 5.FWA | 9.No Heat | |
| 2.HWCI | 6.GravWA | 10.Radiabt | |
| 3.H Pump | 7.Electric | 12. | |
| Cool Type | **100%** | **9 None** | |
| 1.Refrig | 4.W&C Air | 7. | |
| 2.Evapor | 5. | 8. | |
| 3.H Pump | 6. | 9.None | |
| Kitchen Style | **2 Typical** | | |
| 1.Modern | 4.Obsolete | 7. | |
| 2.Typical | 5. | 8. | |
| 3.Old Type | 6. | 9.None | |
| Bath(s) Style | **2 Typical Bath(s)** | | |
| 1.Modern | 4.Obsolete | 7. | |
| 2.Typical | 5. | 8. | |
| 3.Old Type | 6. | 9.None | |
| # Rooms | **5** | | |
| # Bedrooms | **2** | | |
| # Full Baths | **1** | | |
| # Half Baths | **0** | | |
| # Addn Fixtures | **0** | | |
| # Fireplaces | **1** | | |

TRIO Software
A Division of Harris Computer Systems

| | | | |
|---|---|---|---|
| Layout | **1 Typical** | | |
| 1.Typical | 4. | 7. | |
| 2.Inadeq | 5. | 8. | |
| 3.Horrid | 6. | 9. | |
| Attic | **9 None** | | |
| 1.1/4 Fin | 4.Full Fin | 7. | |
| 2.1/2 Fin | 5.Fl/Stair | 8. | |
| 3.3/4 Fin | 6. | 9.None | |
| Insulation | **5 Partial** | | |
| 1.Full | 4.Minimal | 7. | |
| 2.Heavy | 5.Partial | 8. | |
| 3.Capped | 6. | 9.None | |
| Unfinished % | **0%** | | |
| Grade & Factor | **3 Average 90%** | | |
| 1.E Grade | 4.B Grade | 7.AAA Grad | |
| 2.D Grade | 5.A Grade | 8.SC Grade | |
| 3.C Grade | 6.AA Grade | 9.Same | |
| SQFT (Footprint) | **728** | | |
| Condition | **5 Above Average** | | |
| 1.Poor | 4.Avg | 7.V G | |
| 2.Fair | 5.Avg+ | 8.Exc | |
| 3.Avg- | 6.Good | 9.Same | |
| Phys. % Good | **0%** | | |
| Funct. % Good | **90%** | | |
| Functional Code | **6 2014 ADJUSTMENT** | | |
| 1.Incomp | 4.Delap | 7.Seasonal | |
| 2.O-Built | 5.Bsmt | 8. | |
| 3.Fire | 6.2014 ADJ | 9.None | |
| Econ. % Good | **100%** | | |
| Economic Code | **None** | | |
| 0.None | 3.No Power | 7. | |
| 1.Location | 4.Generate | 8. | |
| 2.Encroach | 9.None | 9. | |
| Entrance Code | **0** | | |
| 1.Interior | 4.Vacant | 7. | |
| 2.Refusal | 5.Estimate | 8. | |
| 3.Informed | 6. | 9. | |
| Information Code | **0** | | |
| 1.Owner | 4.Agent | 7. | |
| 2.Relative | 5.Estimate | 8. | |
| 3.Tenant | 6.Other | 9. | |

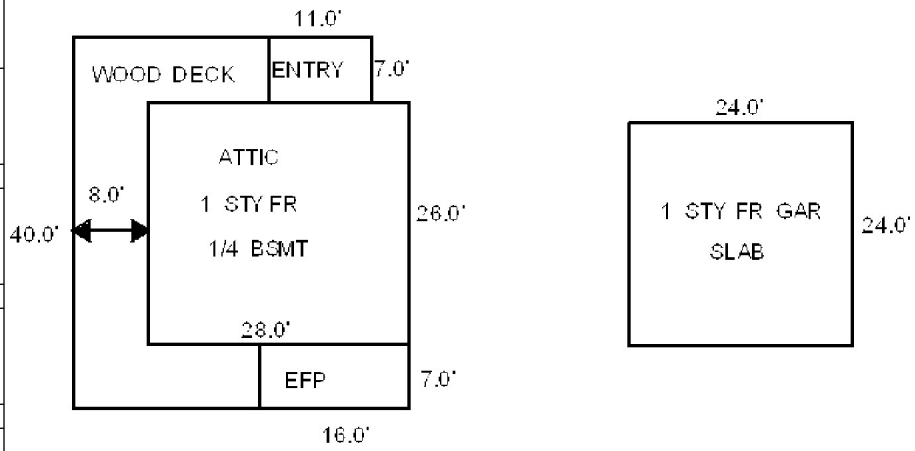


Date Inspected

## Additions, Outbuildings & Improvements

| Type | Year | Units | Grade | Cond | Phys. | Funct. | Sound Value |
|---|---|---|---|---|---|---|---|
| 81 1 SF GARAGE | 1996 | 576 | 0 0 | 0 | 0 % | 0 % | |
| 22 Encl Frame Porch | 0 | 112 | 0 0 | 0 | 0 % | 0 % | |
| 68 Wood Deck | 0 | 528 | 0 0 | 0 | 0 % | 0 % | |
| 22 Encl Frame Porch | 0 | 77 | 0 0 | 0 | 0 % | 0 % | |
| | | | | | % | % | |
| | | | | | % | % | |
| | | | | | % | % | |
| | | | | | % | % | |
| | | | | | % | % | |
| | | | | | % | % | |

1.One Story Fram
2.Two Story Fram
3.Three Story Fr
4.1 & 1/2 Story
5.1 & 3/4 Story
6.2 & 1/2 Story
21.Open Frame Por
22.Encl Frame Por
23.Frame Garage
24.Frame Shed
25.Frame Bay Wind
26.1SFr Overhang
27.Unfin Basement
28.Unfinished Att
29.Finished Attic

Map Lot 111-011 Account 1987 Location 31 FERRY ROAD Card 1 Of 1 10/01/2020

THOMAS, G WILSON II
THOMAS, MARTHA J
PO BOX 517
HANCOCK ME 04640

B4061P132

## Property Data

Neighborhood **21 Neighborhood 21**

Tree Growth Year **0**

TREE GROWTH RECERTIFY **0**

STATE SALE CODE **0**

Zone/Land Use **11 Residential**

Secondary Zone

Topography

| | | |
|---|---|---|
| 1.Level | 4.Below St | 7. |
| 2.Rolling | 5.Low | 8. |
| 3.Above St | 6.Swampy | 9. |

Utilities

| | | |
|---|---|---|
| 1.Public | 4.Dr Well | 7.Cesspool |
| 2.Water | 5.Dug Well | 8. |
| 3.Sewer | 6.Septic | 9.None |

Street

| | | |
|---|---|---|
| 1.Paved | 4.Proposed | 7. |
| 2.Semi Imp | 5. | 8. |
| 3.Gravel | 6. | 9.None |

REVIEW STRUCTURE YEAR **0**

RENTAL? 0=NO 1=YES **0**

## Sale Data

Sale Date

Price

Sale Type

| | | |
|---|---|---|
| 1.Land | 4.Mobile | 7. |
| 2.L & B | 5.Other | 8. |
| 3.Building | 6. | 9. |

Financing

| | | |
|---|---|---|
| 1.Convent | 4.Seller | 7. |
| 2.FHA/VA | 5.Private | 8. |
| 3.Assumed | 6.Cash | 9.Unknown |

Validity

| | | |
|---|---|---|
| 1.Valid | 4.Split | 7.Changes |
| 2.Related | 5.Partial | 8.Other |
| 3.Distress | 6.Exempt | 9.Fr Ffclse |

Verified

| | | |
|---|---|---|
| 1.Buyer | 4.Agent | 7.Family |
| 2.Seller | 5.Pub Rec | 8.Other |
| 3.Lender | 6.MLS | 9. |

## Assessment Record

| Year | Land | Buildings | Exempt | Total |
|---|---|---|---|---|
| 2007 | 40,800 | 0 | 0 | 40,800 |
| 2008 | 40,800 | 0 | 0 | 40,800 |
| 2009 | 40,800 | 0 | 0 | 40,800 |
| 2010 | 55,800 | 69,800 | 0 | 125,600 |
| 2011 | 55,800 | 218,400 | 0 | 274,200 |
| 2012 | 55,800 | 218,400 | 0 | 274,200 |
| 2013 | 55,800 | 218,400 | 0 | 274,200 |
| 2014 | 55,800 | 218,400 | 0 | 274,200 |
| 2015 | 55,800 | 218,400 | 0 | 274,200 |
| 2016 | 55,800 | 218,400 | 0 | 274,200 |
| 2017 | 55,800 | 218,400 | 22,000 | 252,200 |
| 2018 | 55,800 | 218,400 | 22,000 | 252,200 |
| 2019 | 55,800 | 218,400 | 22,000 | 252,200 |
| 2020 | 55,800 | 218,400 | 25,000 | 249,200 |

## Land Data

**Front Foot**

11.Regular Lot
12.Delta Triangle
13.Nabla Triangle
14.Rear Land
15.Miscellaneous

**Square Foot**

16.Regular Lot
17.Secondary Lot
18.Excess Land
19.Condominium
20.Miscellaneous

**Fract. Acre**

21.Homesite (Frac
22.Baselot (Fract
23.Misc (Fract)
**Acres**
24.Excess Acres 1
25.Excess Acres 5
26.Excess Acres 2
27.Excess Acres 5
28.Excess Acres 1
29.Excess acres

| Type | Effective Frontage | Effective Depth | Influence Factor | Influence Code |
|---|---|---|---|---|
| | | | % | |
| | | | % | |
| | | | % | |
| | | | % | |
| | | | % | |
| | | | % | |
| | | | % | |
| | **Square Feet** | | | |
| | | | % | |
| | | | % | |
| | | | % | |
| | | | % | |
| | | | % | |
| | | | % | |
| | | | % | |
| | **Acreage/Sites** | | | |
| 21 | 1.00 | | 100 % | 0 |
| 24 | 0.70 | | 100 % | 0 |
| 44 | 1.00 | | 100 % | 0 |
| | | | % | |
| | | | % | |
| | | | % | |
| | | | % | |

**Total Acreage** 1.70

**Influence Codes**

1.Unimproved
2.Excess Frtg
3.Topography
4.Size/Shape
5.Access
6.Restriction
7.Corner Infl
8.Environment
9.Fract Share
**Acres**
30.Industrial Sit
31.Working Waterf
32.Cultivated Cro
33.Pasture
34.Softwood (Farm
35.Mixed Wood (Fa
36.Hardwood (Farm
37.Softwood
38.Mixed Wood
39.Hardwood
40.Wasteland
41.Gravel Pit
42.Mobile Home Si
43.Location Base
44.Lot Improvemen
45.Waterfront A
46.Lobster Pound

Inspection Witnessed By:

X Date

| No./Date | Description | Date Insp. |
|---|---|---|
| | | |
| | | |
| | | |

Notes:

**Hancock 2020**

# Hancock 2020

Map Lot 111-011 | Account 1987 | Location 31 FERRY ROAD | Card 1 Of 1 | 10/01/2020

| | | | |
|---|---|---|---|
| Building Style | **1 Conventional** | | |
| 0.Uncoded | 4.Cape | 8.Log | |
| 1.Conv. | 5.Garrison | 9.Other | |
| 2.Ranch | 6.Colonial | 10.Dutch C | |
| 3.R Ranch | 7.Contemp | 11.Farmhou | |
| Dwelling Units | **1** | | |
| Other Units | **0** | | |
| Stories | **2 Two Story** | | |
| 1.1 | 4.1.5 | 7.3.5 | |
| 2.2 | 5.1.75 | 8. | |
| 3.3 | 6.2.5 | 9. | |
| Exterior Walls | **1 Wood Siding** | | |
| 0.Uncoded | 4.Asbestos | 8.Stone | |
| 1.Wood | 5.Stucco | 9.Other | |
| 2.Vin/Al | 6.Brick Ve | 10.Concret | |
| 3.Compos. | 7.Solid Br | 12. | |
| Roof Surface | **1 Asphalt Shingles** | | |
| 1.Asphalt | 4.Composit | 7. | |
| 2.Slate | 5.Wood | 8. | |
| 3.Metal | 6.Other | 9. | |
| SF Masonry Trim | **0** | | |
| OPEN-3-CUSTOM | **0** | | |
| OPEN-4-CUSTOM | **0** | | |
| Year Built | **2010** | | |
| Year Remodeled | **0** | | |
| Foundation | **1 Concrete** | | |
| 1.Concrete | 4.Wood | 7. | |
| 2.C Block | 5.Slab | 8. | |
| 3.Br/Stone | 6.Piers | 9. | |
| Basement | **4 Full Basement** | | |
| 1.1/4 Bmt | 4.Full Bmt | 7. | |
| 2.1/2 Bmt | 5.None | 8. | |
| 3.3/4 Bmt | 6. | 9.None | |
| Bsmt Gar # Cars | **0** | | |
| Wet Basement | **1 Dry Basement** | | |
| 1.Dry | 4. | 7. | |
| 2.Damp | 5. | 8. | |
| 3.Wet | 6. | 9. | |

| | | | |
|---|---|---|---|
| SF Bsmt Living | **0** | | |
| Fin Bsmt Grade | **0 0** | | |
| OPEN-5-CUSTOMIZE | **0** | | |
| Heat Type | **100%** | **1 Hot Water BB** | |
| 0.Uncoded | 4.Steam | 8.Fl/Wall | |
| 1.HWBB | 5.FWA | 9.No Heat | |
| 2.HWCI | 6.GravWA | 10.Radiabt | |
| 3.H Pump | 7.Electric | 12. | |
| Cool Type | **100%** | **9 None** | |
| 1.Refrig | 4.W&C Air | 7. | |
| 2.Evapor | 5. | 8. | |
| 3.H Pump | 6. | 9.None | |
| Kitchen Style | **2 Typical** | | |
| 1.Modern | 4.Obsolete | 7. | |
| 2.Typical | 5. | 8. | |
| 3.Old Type | 6. | 9.None | |
| Bath(s) Style | **2 Typical Bath(s)** | | |
| 1.Modern | 4.Obsolete | 7. | |
| 2.Typical | 5. | 8. | |
| 3.Old Type | 6. | 9.None | |
| # Rooms | **7** | | |
| # Bedrooms | **3** | | |
| # Full Baths | **1** | | |
| # Half Baths | **1** | | |
| # Addn Fixtures | **0** | | |
| # Fireplaces | **0** | | |

TRIO Software
A Division of Harris Computer Systems

| | | | |
|---|---|---|---|
| Layout | **1 Typical** | | |
| 1.Typical | 4. | 7. | |
| 2.Inadeq | 5. | 8. | |
| 3.Horrid | 6. | 9. | |
| Attic | **9 None** | | |
| 1.1/4 Fin | 4.Full Fin | 7. | |
| 2.1/2 Fin | 5.Fl/Stair | 8. | |
| 3.3/4 Fin | 6. | 9.None | |
| Insulation | **1 Full** | | |
| 1.Full | 4.Minimal | 7. | |
| 2.Heavy | 5.Partial | 8. | |
| 3.Capped | 6. | 9.None | |
| Unfinished % | **0%** | | |
| Grade & Factor | **3 Average 110%** | | |
| 1.E Grade | 4.B Grade | 7.AAA Grad | |
| 2.D Grade | 5.A Grade | 8.SC Grade | |
| 3.C Grade | 6.AA Grade | 9.Same | |
| SQFT (Footprint) | **884** | | |
| Condition | **4 Average** | | |
| 1.Poor | 4.Avg | 7.V G | |
| 2.Fair | 5.Avg+ | 8.Exc | |
| 3.Avg- | 6.Good | 9.Same | |
| Phys. % Good | **0%** | | |
| Funct. % Good | **100%** | | |
| Functional Code | **1 Incomplete** | | |
| 1.Incomp | 4.Delap | 7.Seasonal | |
| 2.O-Built | 5.Bsmt | 8. | |
| 3.Fire | 6.2014 ADJ | 9.None | |
| Econ. % Good | **100%** | | |
| Economic Code | **None** | | |
| 0.None | 3.No Power | 7. | |
| 1.Location | 4.Generate | 8. | |
| 2.Encroach | 9.None | 9. | |
| Entrance Code | **0** | | |
| 1.Interior | 4.Vacant | 7. | |
| 2.Refusal | 5.Estimate | 8. | |
| 3.Informed | 6. | 9. | |
| Information Code | **0** | | |
| 1.Owner | 4.Agent | 7. | |
| 2.Relative | 5.Estimate | 8. | |
| 3.Tenant | 6.Other | 9. | |

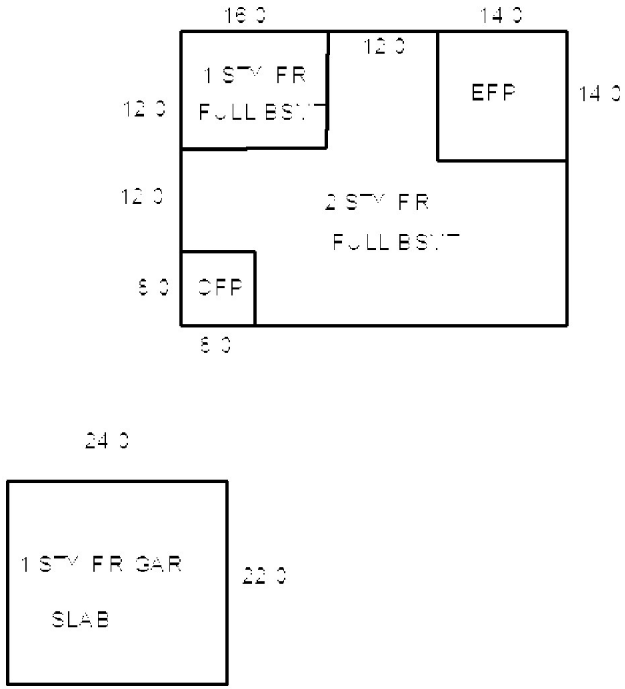


Date Inspected

## Additions, Outbuildings & Improvements

| Type | Year | Units | Grade | Cond | Phys. | Funct. | Sound Value |
|---|---|---|---|---|---|---|---|
| 1 One Story Frame | 0 | 192 | 0 0 | 0 | 0 % | 0 % | |
| 22 Encl Frame Porch | 0 | 224 | 0 0 | 0 | 0 % | 0 % | |
| 21 Open Frame | 0 | 64 | 0 0 | 0 | 0 % | 0 % | |
| 81 1 SF GARAGE | 2011 | 528 | 0 0 | 0 | 0 % | 0 % | |
| | | | | | % | % | |
| | | | | | % | % | |
| | | | | | % | % | |
| | | | | | % | % | |
| | | | | | % | % | |
| | | | | | % | % | |

1.One Story Fram
2.Two Story Fram
3.Three Story Fr
4.1 & 1/2 Story
5.1 & 3/4 Story
6.2 & 1/2 Story
21.Open Frame Por
22.Encl Frame Por
23.Frame Garage
24.Frame Shed
25.Frame Bay Wind
26.1SFr Overhang
27.Unfin Basement
28.Unfinished Att
29.Finished Attic

Map Lot 111-012 Account 936 Location FERRY ROAD Card 1 Of 1 10/01/2020

CLARKE, BRUCE & TRUDY, TRUSTEES
CLARKE, BRUCE & TRUDY LIV TRUST
15 FERRY ROAD
HANCOCK ME 04640

B2510P66 B6153P234

## Property Data

Neighborhood **21 Neighborhood 21**

Tree Growth Year **0**

TREE GROWTH RECERTIFY **0**

STATE SALE CODE **0**

Zone/Land Use **11 Residential**

Secondary Zone

Topography

| | | |
|---|---|---|
| 1.Level | 4.Below St | 7. |
| 2.Rolling | 5.Low | 8. |
| 3.Above St | 6.Swampy | 9. |

Utilities

| | | |
|---|---|---|
| 1.Public | 4.Dr Well | 7.Cesspool |
| 2.Water | 5.Dug Well | 8. |
| 3.Sewer | 6.Septic | 9.None |

Street

| | | |
|---|---|---|
| 1.Paved | 4.Proposed | 7. |
| 2.Semi Imp | 5. | 8. |
| 3.Gravel | 6. | 9.None |

REVIEW STRUCTURE YEAR **0**

RENTAL? 0=NO 1=YES **0**

## Sale Data

Sale Date

Price

Sale Type

| | | |
|---|---|---|
| 1.Land | 4.Mobile | 7. |
| 2.L & B | 5.Other | 8. |
| 3.Building | 6. | 9. |

Financing

| | | |
|---|---|---|
| 1.Convent | 4.Seller | 7. |
| 2.FHA/VA | 5.Private | 8. |
| 3.Assumed | 6.Cash | 9.Unknown |

Validity

| | | |
|---|---|---|
| 1.Valid | 4.Split | 7.Changes |
| 2.Related | 5.Partial | 8.Other |
| 3.Distress | 6.Exempt | 9.Fr Ffclse |

Verified

| | | |
|---|---|---|
| 1.Buyer | 4.Agent | 7.Family |
| 2.Seller | 5.Pub Rec | 8.Other |
| 3.Lender | 6.MLS | 9. |

## Assessment Record

| Year | Land | Buildings | Exempt | Total |
|---|---|---|---|---|
| 2007 | 40,000 | 0 | 0 | 40,000 |
| 2008 | 40,000 | 0 | 0 | 40,000 |
| 2009 | 40,000 | 0 | 0 | 40,000 |
| 2010 | 40,000 | 0 | 0 | 40,000 |
| 2011 | 40,000 | 0 | 0 | 40,000 |
| 2012 | 40,000 | 0 | 0 | 40,000 |
| 2013 | 40,000 | 0 | 0 | 40,000 |
| 2014 | 40,000 | 0 | 0 | 40,000 |
| 2015 | 40,000 | 0 | 0 | 40,000 |
| 2016 | 40,000 | 0 | 0 | 40,000 |
| 2017 | 40,000 | 0 | 0 | 40,000 |
| 2018 | 40,000 | 0 | 0 | 40,000 |
| 2019 | 40,000 | 0 | 0 | 40,000 |
| 2020 | 40,000 | 0 | 0 | 40,000 |

## Land Data

| Front Foot | Type | Effective Frontage | Effective Depth | Influence Factor | Influence Code |
|---|---|---|---|---|---|
| 11.Regular Lot | | | | % | |
| 12.Delta Triangle | | | | % | |
| 13.Nabla Triangle | | | | % | |
| 14.Rear Land | | | | % | |
| 15.Miscellaneous | | | | % | |
| | | | | % | |
| | | | | % | |
| **Square Foot** | | **Square Feet** | | | |
| 16.Regular Lot | | | | % | |
| 17.Secondary Lot | | | | % | |
| 18.Excess Land | | | | % | |
| 19.Condominium | | | | % | |
| 20.Miscellaneous | | | | % | |
| | | | | % | |
| | | | | % | |
| **Fract. Acre** | | **Acreage/Sites** | | | |
| 21.Homesite (Frac | 21 | 1.00 | 100 | % | 0 |
| 22.Baselot (Fract | 40 | 0.30 | 100 | % | 0 |
| 23.Misc (Fract) | | | | % | |
| **Acres** | | | | % | |
| 24.Excess Acres 1 | | | | % | |
| 25.Excess Acres 5 | | | | % | |
| 26.Excess Acres 2 | | | | % | |
| 27.Excess Acres 5 | | | | % | |
| 28.Excess Acres 1 | | | | % | |
| 29.Excess acres | | | | % | |

**Total Acreage** 1.30

### Influence Codes

1.Unimproved
2.Excess Frtg
3.Topography
4.Size/Shape
5.Access
6.Restriction
7.Corner Infl
8.Environment
9.Fract Share
**Acres**
30.Industrial Sit
31.Working Waterf
32.Cultivated Cro
33.Pasture
34.Softwood (Farm
35.Mixed Wood (Fa
36.Hardwood (Farm
37.Softwood
38.Mixed Wood
39.Hardwood
40.Wasteland
41.Gravel Pit
42.Mobile Home Si
43.Location Base
44.Lot Improvemen
45.Waterfront A
46.Lobster Pound

Inspection Witnessed By:

X Date

| No./Date | Description | Date Insp. |
|---|---|---|
| | | |
| | | |
| | | |

Notes:

**Hancock 2020**

# Hancock 2020

Map Lot 111-012 | Account 936 | Location FERRY ROAD | Card 1 Of 1 | 10/01/2020

| Building Style | | |
|---|---|---|
| 0.Uncoded | 4.Cape | 8.Log |
| 1.Conv. | 5.Garrison | 9.Other |
| 2.Ranch | 6.Colonial | 10.Dutch C |
| 3.R Ranch | 7.Contemp | 11.Farmhou |

| Dwelling Units |
|---|
| Other Units |

| Stories | | |
|---|---|---|
| 1.1 | 4.1.5 | 7.3.5 |
| 2.2 | 5.1.75 | 8. |
| 3.3 | 6.2.5 | 9. |

| Exterior Walls | | |
|---|---|---|
| 0.Uncoded | 4.Asbestos | 8.Stone |
| 1.Wood | 5.Stucco | 9.Other |
| 2.Vin/Al | 6.Brick Ve | 10.Concret |
| 3.Compos. | 7.Solid Br | 12. |

| Roof Surface | | |
|---|---|---|
| 1.Asphalt | 4.Composit | 7. |
| 2.Slate | 5.Wood | 8. |
| 3.Metal | 6.Other | 9. |

| SF Masonry Trim |
|---|
| OPEN-3-CUSTOM |
| OPEN-4-CUSTOM |
| Year Built |
| Year Remodeled |

| Foundation | | |
|---|---|---|
| 1.Concrete | 4.Wood | 7. |
| 2.C Block | 5.Slab | 8. |
| 3.Br/Stone | 6.Piers | 9. |

| Basement | | |
|---|---|---|
| 1.1/4 Bmt | 4.Full Bmt | 7. |
| 2.1/2 Bmt | 5.None | 8. |
| 3.3/4 Bmt | 6. | 9.None |

| Bsmt Gar # Cars |
|---|

| Wet Basement | | |
|---|---|---|
| 1.Dry | 4. | 7. |
| 2.Damp | 5. | 8. |
| 3.Wet | 6. | 9. |

| SF Bsmt Living |
|---|
| Fin Bsmt Grade |
| OPEN-5-CUSTOMIZE |

| Heat Type **100%** | | |
|---|---|---|
| 0.Uncoded | 4.Steam | 8.Fl/Wall |
| 1.HWBB | 5.FWA | 9.No Heat |
| 2.HWCI | 6.GravWA | 10.Radiabt |
| 3.H Pump | 7.Electric | 12. |

| Cool Type **100%** | | |
|---|---|---|
| 1.Refrig | 4.W&C Air | 7. |
| 2.Evapor | 5. | 8. |
| 3.H Pump | 6. | 9.None |

| Kitchen Style | | |
|---|---|---|
| 1.Modern | 4.Obsolete | 7. |
| 2.Typical | 5. | 8. |
| 3.Old Type | 6. | 9.None |

| Bath(s) Style | | |
|---|---|---|
| 1.Modern | 4.Obsolete | 7. |
| 2.Typical | 5. | 8. |
| 3.Old Type | 6. | 9.None |

| # Rooms |
|---|
| # Bedrooms |
| # Full Baths |
| # Half Baths |
| # Addn Fixtures |
| # Fireplaces |

TRIO Software
A Division of Harris Computer Systems

| Layout | | |
|---|---|---|
| 1.Typical | 4. | 7. |
| 2.Inadeq | 5. | 8. |
| 3.Horrid | 6. | 9. |

| Attic | | |
|---|---|---|
| 1.1/4 Fin | 4.Full Fin | 7. |
| 2.1/2 Fin | 5.Fl/Stair | 8. |
| 3.3/4 Fin | 6. | 9.None |

| Insulation | | |
|---|---|---|
| 1.Full | 4.Minimal | 7. |
| 2.Heavy | 5.Partial | 8. |
| 3.Capped | 6. | 9.None |

| Unfinished % |
|---|

| Grade & Factor | | |
|---|---|---|
| 1.E Grade | 4.B Grade | 7.AAA Grad |
| 2.D Grade | 5.A Grade | 8.SC Grade |
| 3.C Grade | 6.AA Grade | 9.Same |

| SQFT (Footprint) |
|---|

| Condition | | |
|---|---|---|
| 1.Poor | 4.Avg | 7.V G |
| 2.Fair | 5.Avg+ | 8.Exc |
| 3.Avg- | 6.Good | 9.Same |

| Phys. % Good |
|---|
| Funct. % Good |

| Functional Code | | |
|---|---|---|
| 1.Incomp | 4.Delap | 7.Seasonal |
| 2.O-Built | 5.Bsmt | 8. |
| 3.Fire | 6.2014 ADJ | 9.None |

| Econ. % Good |
|---|

| Economic Code | | |
|---|---|---|
| 0.None | 3.No Power | 7. |
| 1.Location | 4.Generate | 8. |
| 2.Encroach | 9.None | 9. |

| Entrance Code **0** | | |
|---|---|---|
| 1.Interior | 4.Vacant | 7. |
| 2.Refusal | 5.Estimate | 8. |
| 3.Informed | 6. | 9. |

| Information Code **0** | | |
|---|---|---|
| 1.Owner | 4.Agent | 7. |
| 2.Relative | 5.Estimate | 8. |
| 3.Tenant | 6.Other | 9. |

Date Inspected

## Additions, Outbuildings & Improvements

| Type | Year | Units | Grade | Cond | Phys. | Funct. | Sound Value |
|---|---|---|---|---|---|---|---|
| | | | | | % | % | |
| | | | | | % | % | |
| | | | | | % | % | |
| | | | | | % | % | |
| | | | | | % | % | |
| | | | | | % | % | |
| | | | | | % | % | |
| | | | | | % | % | |
| | | | | | % | % | |
| | | | | | % | % | |

1.One Story Fram
2.Two Story Fram
3.Three Story Fr
4.1 & 1/2 Story
5.1 & 3/4 Story
6.2 & 1/2 Story
21.Open Frame Por
22.Encl Frame Por
23.Frame Garage
24.Frame Shed
25.Frame Bay Wind
26.1SFr Overhang
27.Unfin Basement
28.Unfinished Att
29.Finished Attic

Map Lot 111-013 Account 233 Location 15 FERRY ROAD Card 1 Of 1 10/01/2020

CLARKE, BRUCE AND TRUDY, TRUSTEES
CLARKE, BRUCE & TRTUDY LIT TRUST
15 FERRY ROAD
HANCOCK ME 04640

B2508P274 B6144P346

Inspection Witnessed By:

X Date

| No./Date | Description | Date Insp. |
|---|---|---|
| | | |
| | | |
| | | |

Notes:

**Hancock 2020**

## Property Data

Neighborhood **21 Neighborhood 21**

Tree Growth Year **0**

TREE GROWTH RECERTIFY **0**

STATE SALE CODE **0**

Zone/Land Use **11 Residential**

Secondary Zone

Topography **9** **9**

1.Level 4.Below St 7.
2.Rolling 5.Low 8.
3.Above St 6.Swampy 9.

Utilities **9 None** **9 None**

1.Public 4.Dr Well 7.Cesspool
2.Water 5.Dug Well 8.
3.Sewer 6.Septic 9.None

Street **1 Paved**

1.Paved 4.Proposed 7.
2.Semi Imp 5. 8.
3.Gravel 6. 9.None

REVIEW STRUCTURE YEAR **0**

RENTAL? 0=NO 1=YES **0**

## Sale Data

Sale Date

Price

Sale Type

1.Land 4.Mobile 7.
2.L & B 5.Other 8.
3.Building 6. 9.

Financing

1.Convent 4.Seller 7.
2.FHA/VA 5.Private 8.
3.Assumed 6.Cash 9.Unknown

Validity

1.Valid 4.Split 7.Changes
2.Related 5.Partial 8.Other
3.Distress 6.Exempt 9.Fr Ffclse

Verified

1.Buyer 4.Agent 7.Family
2.Seller 5.Pub Rec 8.Other
3.Lender 6.MLS 9.

## Assessment Record

| Year | Land | Buildings | Exempt | Total |
|---|---|---|---|---|
| 2007 | 56,600 | 121,600 | 13,000 | 165,200 |
| 2008 | 56,600 | 121,600 | 13,000 | 165,200 |
| 2009 | 56,600 | 121,600 | 13,000 | 165,200 |
| 2010 | 56,600 | 121,600 | 10,000 | 168,200 |
| 2011 | 56,600 | 121,600 | 10,000 | 168,200 |
| 2012 | 56,600 | 121,600 | 10,000 | 168,200 |
| 2013 | 56,600 | 121,600 | 10,000 | 168,200 |
| 2014 | 56,600 | 115,500 | 10,800 | 161,300 |
| 2015 | 56,600 | 115,500 | 11,000 | 161,100 |
| 2016 | 56,600 | 115,500 | 16,500 | 155,600 |
| 2017 | 56,600 | 115,500 | 22,000 | 150,100 |
| 2018 | 56,600 | 115,500 | 22,000 | 150,100 |
| 2019 | 56,600 | 115,500 | 22,000 | 150,100 |
| 2020 | 56,600 | 115,500 | 25,000 | 147,100 |

## Land Data

| Front Foot | Type | Effective Frontage | Effective Depth | Influence Factor | Influence Code |
|---|---|---|---|---|---|
| 11.Regular Lot | | | | % | |
| 12.Delta Triangle | | | | % | |
| 13.Nabla Triangle | | | | % | |
| 14.Rear Land | | | | % | |
| 15.Miscellaneous | | | | % | |
| | | | | % | |
| | | | | % | |
| **Square Foot** | | **Square Feet** | | | |
| 16.Regular Lot | | | | % | |
| 17.Secondary Lot | | | | % | |
| 18.Excess Land | | | | % | |
| 19.Condominium | | | | % | |
| 20.Miscellaneous | | | | % | |
| | | | | % | |
| | | | | % | |
| **Fract. Acre** | | **Acreage/Sites** | | | |
| 21.Homesite (Frac | 21 | 1.00 | 100 | % | 0 |
| 22.Baselot (Fract | 24 | 1.30 | 100 | % | 0 |
| 23.Misc (Fract) | 44 | 1.00 | 100 | % | 0 |
| **Acres** | | | | % | |
| 24.Excess Acres 1 | | | | % | |
| 25.Excess Acres 5 | | | | % | |
| 26.Excess Acres 2 | | | | % | |
| 27.Excess Acres 5 | | | | % | |
| 28.Excess Acres 1 | | | | % | |
| 29.Excess acres | | | | % | |

**Total Acreage** 2.30

### Influence Codes

1.Unimproved
2.Excess Frtg
3.Topography
4.Size/Shape
5.Access
6.Restriction
7.Corner Infl
8.Environment
9.Fract Share
**Acres**
30.Industrial Sit
31.Working Waterf
32.Cultivated Cro
33.Pasture
34.Softwood (Farm
35.Mixed Wood (Fa
36.Hardwood (Farm
37.Softwood
38.Mixed Wood
39.Hardwood
40.Wasteland
41.Gravel Pit
42.Mobile Home Si
43.Location Base
44.Lot Improvemen
45.Waterfront A
46.Lobster Pound

# Hancock 2020

Map Lot 111-013 | Account 233 | Location 15 FERRY ROAD | Card 1 Of 1 | 10/01/2020

| | | |
|---|---|---|
| Building Style | **2 Ranch** | |
| 0.Uncoded | 4.Cape | 8.Log |
| 1.Conv. | 5.Garrison | 9.Other |
| 2.Ranch | 6.Colonial | 10.Dutch C |
| 3.R Ranch | 7.Contemp | 11.Farmhou |
| Dwelling Units | **1** | |
| Other Units | **0** | |
| Stories | **1 One Story** | |
| 1.1 | 4.1.5 | 7.3.5 |
| 2.2 | 5.1.75 | 8. |
| 3.3 | 6.2.5 | 9. |
| Exterior Walls | **1 Wood Siding** | |
| 0.Uncoded | 4.Asbestos | 8.Stone |
| 1.Wood | 5.Stucco | 9.Other |
| 2.Vin/Al | 6.Brick Ve | 10.Concret |
| 3.Compos. | 7.Solid Br | 12. |
| Roof Surface | **1 Asphalt Shingles** | |
| 1.Asphalt | 4.Composit | 7. |
| 2.Slate | 5.Wood | 8. |
| 3.Metal | 6.Other | 9. |
| SF Masonry Trim | **0** | |
| OPEN-3-CUSTOM | **0** | |
| OPEN-4-CUSTOM | **0** | |
| Year Built | **1974** | |
| Year Remodeled | **0** | |
| Foundation | **1 Concrete** | |
| 1.Concrete | 4.Wood | 7. |
| 2.C Block | 5.Slab | 8. |
| 3.Br/Stone | 6.Piers | 9. |
| Basement | **4 Full Basement** | |
| 1.1/4 Bmt | 4.Full Bmt | 7. |
| 2.1/2 Bmt | 5.None | 8. |
| 3.3/4 Bmt | 6. | 9.None |
| Bsmt Gar # Cars | **0** | |
| Wet Basement | **1 Dry Basement** | |
| 1.Dry | 4. | 7. |
| 2.Damp | 5. | 8. |
| 3.Wet | 6. | 9. |

| | | |
|---|---|---|
| SF Bsmt Living | **0** | |
| Fin Bsmt Grade | **0 0** | |
| OPEN-5-CUSTOMIZE | **0** | |
| Heat Type | **100%** | **7 Electric** |
| 0.Uncoded | 4.Steam | 8.Fl/Wall |
| 1.HWBB | 5.FWA | 9.No Heat |
| 2.HWCI | 6.GravWA | 10.Radiabt |
| 3.H Pump | 7.Electric | 12. |
| Cool Type | **100%** | **9 None** |
| 1.Refrig | 4.W&C Air | 7. |
| 2.Evapor | 5. | 8. |
| 3.H Pump | 6. | 9.None |
| Kitchen Style | **2 Typical** | |
| 1.Modern | 4.Obsolete | 7. |
| 2.Typical | 5. | 8. |
| 3.Old Type | 6. | 9.None |
| Bath(s) Style | **2 Typical Bath(s)** | |
| 1.Modern | 4.Obsolete | 7. |
| 2.Typical | 5. | 8. |
| 3.Old Type | 6. | 9.None |
| # Rooms | **6** | |
| # Bedrooms | **2** | |
| # Full Baths | **1** | |
| # Half Baths | **0** | |
| # Addn Fixtures | **0** | |
| # Fireplaces | **1** | |

TRIO Software
A Division of Harris Computer Systems

| | | |
|---|---|---|
| Layout | **1 Typical** | |
| 1.Typical | 4. | 7. |
| 2.Inadeq | 5. | 8. |
| 3.Horrid | 6. | 9. |
| Attic | **9 None** | |
| 1.1/4 Fin | 4.Full Fin | 7. |
| 2.1/2 Fin | 5.Fl/Stair | 8. |
| 3.3/4 Fin | 6. | 9.None |
| Insulation | **1 Full** | |
| 1.Full | 4.Minimal | 7. |
| 2.Heavy | 5.Partial | 8. |
| 3.Capped | 6. | 9.None |
| Unfinished % | **0%** | |
| Grade & Factor | **3 Average 100%** | |
| 1.E Grade | 4.B Grade | 7.AAA Grad |
| 2.D Grade | 5.A Grade | 8.SC Grade |
| 3.C Grade | 6.AA Grade | 9.Same |
| SQFT (Footprint) | **1160** | |
| Condition | **4 Average** | |
| 1.Poor | 4.Avg | 7.V G |
| 2.Fair | 5.Avg+ | 8.Exc |
| 3.Avg- | 6.Good | 9.Same |
| Phys. % Good | **0%** | |
| Funct. % Good | **95%** | |
| Functional Code | **6 2014 ADJUSTMENT** | |
| 1.Incomp | 4.Delap | 7.Seasonal |
| 2.O-Built | 5.Bsmt | 8. |
| 3.Fire | 6.2014 ADJ | 9.None |
| Econ. % Good | **100%** | |
| Economic Code | **None** | |
| 0.None | 3.No Power | 7. |
| 1.Location | 4.Generate | 8. |
| 2.Encroach | 9.None | 9. |
| Entrance Code | **0** | |
| 1.Interior | 4.Vacant | 7. |
| 2.Refusal | 5.Estimate | 8. |
| 3.Informed | 6. | 9. |
| Information Code | **0** | |
| 1.Owner | 4.Agent | 7. |
| 2.Relative | 5.Estimate | 8. |
| 3.Tenant | 6.Other | 9. |

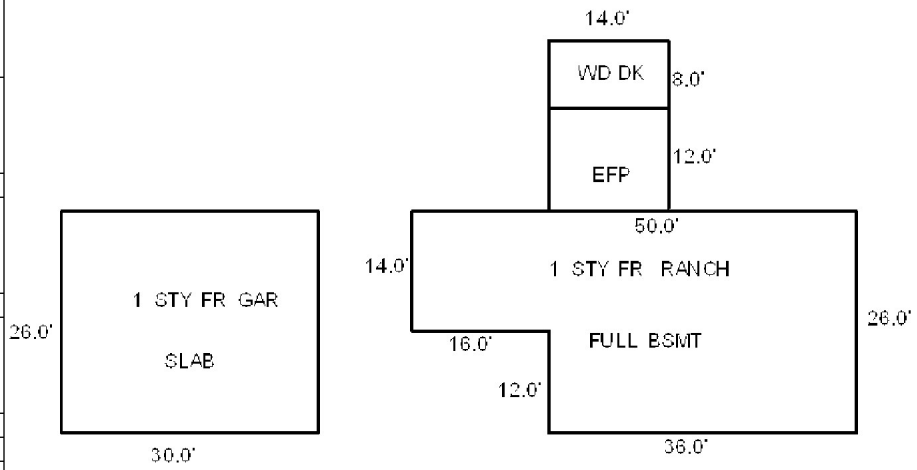

Date Inspected

## Additions, Outbuildings & Improvements

| Type | Year | Units | Grade | Cond | Phys. | Funct. | Sound Value |
|---|---|---|---|---|---|---|---|
| 81 1 SF GARAGE | 1974 | 780 | 0 0 | 0 | 0 % | 0 % | |
| 68 Wood Deck | 0 | 112 | 0 0 | 0 | 0 % | 0 % | |
| 22 Encl Frame Porch | 0 | 168 | 0 0 | 0 | 0 % | 0 % | |
| | | | | | % | % | |
| | | | | | % | % | |
| | | | | | % | % | |
| | | | | | % | % | |
| | | | | | % | % | |
| | | | | | % | % | |
| | | | | | % | % | |

1.One Story Fram
2.Two Story Fram
3.Three Story Fr
4.1 & 1/2 Story
5.1 & 3/4 Story
6.2 & 1/2 Story
21.Open Frame Por
22.Encl Frame Por
23.Frame Garage
24.Frame Shed
25.Frame Bay Wind
26.1SFr Overhang
27.Unfin Basement
28.Unfinished Att
29.Finished Attic

Map Lot 111-014 Account 1506 Location 550 EASTSIDE ROAD Card 1 Of 1 10/01/2020

DAVIDSON, NICHLOAS
GODDARD, CATHERINE F
60 BLUFF POINT ROAD
FRANKLIN ME 04634

B1649P182 B6898P910

Previous Owner
STONE, DONALD L. & KATHRYN M.
C/O BILL SORRELL
PO BOX 331
COVINGTON IN 47932
Sale Date: 7/09/2018

Inspection Witnessed By:

X Date

| No./Date | Description | Date Insp. |
|---|---|---|
| | | |
| | | |
| | | |

Notes:
BILL- 217-474-8928 POA

## Property Data

| | |
|---|---|
| Neighborhood | **24 Neighborhood 24** |
| Tree Growth Year | **0** |
| TREE GROWTH RECERTIFY | **0** |
| STATE SALE CODE | **0** |
| Zone/Land Use | **11 Residential** |
| Secondary Zone | |

Topography

| | | |
|---|---|---|
| 1.Level | 4.Below St | 7. |
| 2.Rolling | 5.Low | 8. |
| 3.Above St | 6.Swampy | 9. |

Utilities

| | | |
|---|---|---|
| 1.Public | 4.Dr Well | 7.Cesspool |
| 2.Water | 5.Dug Well | 8. |
| 3.Sewer | 6.Septic | 9.None |

Street

| | | |
|---|---|---|
| 1.Paved | 4.Proposed | 7. |
| 2.Semi Imp | 5. | 8. |
| 3.Gravel | 6. | 9.None |

| | |
|---|---|
| REVIEW STRUCTURE YEAR | **0** |
| RENTAL? 0=NO 1=YES | **0** |

## Sale Data

| | |
|---|---|
| Sale Date | **7/09/2018** |
| Price | **153,355** |
| Sale Type | **2 Land & Buildings** |

| | | |
|---|---|---|
| 1.Land | 4.Mobile | 7. |
| 2.L & B | 5.Other | 8. |
| 3.Building | 6. | 9. |

| | |
|---|---|
| Financing | **1 Conventional** |

| | | |
|---|---|---|
| 1.Convent | 4.Seller | 7. |
| 2.FHA/VA | 5.Private | 8. |
| 3.Assumed | 6.Cash | 9.Unknown |

| | |
|---|---|
| Validity | **1 Arms Length Sale** |

| | | |
|---|---|---|
| 1.Valid | 4.Split | 7.Changes |
| 2.Related | 5.Partial | 8.Other |
| 3.Distress | 6.Exempt | 9.Fr Ffclse |

| | |
|---|---|
| Verified | **1 Buyer** |

| | | |
|---|---|---|
| 1.Buyer | 4.Agent | 7.Family |
| 2.Seller | 5.Pub Rec | 8.Other |
| 3.Lender | 6.MLS | 9. |

## Assessment Record

| Year | Land | Buildings | Exempt | Total |
|---|---|---|---|---|
| 2007 | 39,500 | 133,600 | 18,000 | 155,100 |
| 2008 | 39,500 | 133,600 | 19,000 | 154,100 |
| 2009 | 39,500 | 133,600 | 19,000 | 154,100 |
| 2010 | 39,500 | 133,600 | 16,000 | 157,100 |
| 2011 | 39,500 | 133,600 | 16,000 | 157,100 |
| 2012 | 39,500 | 133,600 | 16,000 | 157,100 |
| 2013 | 39,500 | 133,600 | 16,000 | 157,100 |
| 2014 | 39,500 | 126,900 | 17,280 | 149,120 |
| 2015 | 39,500 | 126,900 | 17,600 | 148,800 |
| 2016 | 39,500 | 126,900 | 23,100 | 143,300 |
| 2017 | 39,500 | 125,200 | 28,600 | 136,100 |
| 2018 | 39,500 | 125,200 | 28,600 | 136,100 |
| 2019 | 39,500 | 125,200 | 28,600 | 136,100 |
| 2020 | 39,500 | 125,200 | 0 | 164,700 |

## Land Data

| Front Foot | Type | Effective Frontage | Effective Depth | Influence Factor | Influence Code |
|---|---|---|---|---|---|
| 11.Regular Lot | | | | % | |
| 12.Delta Triangle | | | | % | |
| 13.Nabla Triangle | | | | % | |
| 14.Rear Land | | | | % | |
| 15.Miscellaneous | | | | % | |
| | | | | % | |
| | | | | % | |
| **Square Foot** | | **Square Feet** | | | |
| 16.Regular Lot | | | | % | |
| 17.Secondary Lot | | | | % | |
| 18.Excess Land | | | | % | |
| 19.Condominium | | | | % | |
| 20.Miscellaneous | | | | % | |
| | | | | % | |
| | | | | % | |
| **Fract. Acre** | | **Acreage/Sites** | | | |
| 21.Homesite (Frac | 21 | 1.00 | 100 | % | 0 |
| 22.Baselot (Fract | 24 | 0.60 | 100 | % | 0 |
| 23.Misc (Fract) | 44 | 1.00 | 100 | % | 0 |
| **Acres** | | | | % | |
| 24.Excess Acres 1 | | | | % | |
| 25.Excess Acres 5 | | | | % | |
| 26.Excess Acres 2 | | | | % | |
| 27.Excess Acres 5 | | | | % | |
| 28.Excess Acres 1 | | | | % | |
| 29.Excess acres | | | | % | |

**Total Acreage** 1.60

### Influence Codes

1.Unimproved
2.Excess Frtg
3.Topography
4.Size/Shape
5.Access
6.Restriction
7.Corner Infl
8.Environment
9.Fract Share
**Acres**
30.Industrial Sit
31.Working Waterf
32.Cultivated Cro
33.Pasture
34.Softwood (Farm
35.Mixed Wood (Fa
36.Hardwood (Farm
37.Softwood
38.Mixed Wood
39.Hardwood
40.Wasteland
41.Gravel Pit
42.Mobile Home Si
43.Location Base
44.Lot Improvemen
45.Waterfront A
46.Lobster Pound

**Hancock 2020**

# Hancock 2020

Map Lot 111-014 | Account 1506 | Location 550 EASTSIDE ROAD | Card 1 Of 1 | 10/01/2020

| | | |
|---|---|---|
| Building Style | **1 Conventional** | |
| 0.Uncoded | 4.Cape | 8.Log |
| 1.Conv. | 5.Garrison | 9.Other |
| 2.Ranch | 6.Colonial | 10.Dutch C |
| 3.R Ranch | 7.Contemp | 11.Farmhou |
| Dwelling Units | **1** | |
| Other Units | **0** | |
| Stories | **1 One Story** | |
| 1.1 | 4.1.5 | 7.3.5 |
| 2.2 | 5.1.75 | 8. |
| 3.3 | 6.2.5 | 9. |
| Exterior Walls | **3 Composition** | |
| 0.Uncoded | 4.Asbestos | 8.Stone |
| 1.Wood | 5.Stucco | 9.Other |
| 2.Vin/Al | 6.Brick Ve | 10.Concret |
| 3.Compos. | 7.Solid Br | 12. |
| Roof Surface | **1 Asphalt Shingles** | |
| 1.Asphalt | 4.Composit | 7. |
| 2.Slate | 5.Wood | 8. |
| 3.Metal | 6.Other | 9. |
| SF Masonry Trim | **0** | |
| OPEN-3-CUSTOM | **0** | |
| OPEN-4-CUSTOM | **0** | |
| Year Built | **1972** | |
| Year Remodeled | **0** | |
| Foundation | **1 Concrete** | |
| 1.Concrete | 4.Wood | 7. |
| 2.C Block | 5.Slab | 8. |
| 3.Br/Stone | 6.Piers | 9. |
| Basement | **4 Full Basement** | |
| 1.1/4 Bmt | 4.Full Bmt | 7. |
| 2.1/2 Bmt | 5.None | 8. |
| 3.3/4 Bmt | 6. | 9.None |
| Bsmt Gar # Cars | **0** | |
| Wet Basement | **1 Dry Basement** | |
| 1.Dry | 4. | 7. |
| 2.Damp | 5. | 8. |
| 3.Wet | 6. | 9. |

| | | |
|---|---|---|
| SF Bsmt Living | **0** | |
| Fin Bsmt Grade | **0 0** | |
| OPEN-5-CUSTOMIZE | **0** | |
| Heat Type | **100%** | **1 Hot Water BB** |
| 0.Uncoded | 4.Steam | 8.Fl/Wall |
| 1.HWBB | 5.FWA | 9.No Heat |
| 2.HWCI | 6.GravWA | 10.Radiabt |
| 3.H Pump | 7.Electric | 12. |
| Cool Type | **100%** | **9 None** |
| 1.Refrig | 4.W&C Air | 7. |
| 2.Evapor | 5. | 8. |
| 3.H Pump | 6. | 9.None |
| Kitchen Style | **2 Typical** | |
| 1.Modern | 4.Obsolete | 7. |
| 2.Typical | 5. | 8. |
| 3.Old Type | 6. | 9.None |
| Bath(s) Style | **2 Typical Bath(s)** | |
| 1.Modern | 4.Obsolete | 7. |
| 2.Typical | 5. | 8. |
| 3.Old Type | 6. | 9.None |
| # Rooms | **5** | |
| # Bedrooms | **2** | |
| # Full Baths | **1** | |
| # Half Baths | **0** | |
| # Addn Fixtures | **0** | |
| # Fireplaces | **1** | |

TRIO Software
A Division of Harris Computer Systems

| | | |
|---|---|---|
| Layout | **1 Typical** | |
| 1.Typical | 4. | 7. |
| 2.Inadeq | 5. | 8. |
| 3.Horrid | 6. | 9. |
| Attic | **9 None** | |
| 1.1/4 Fin | 4.Full Fin | 7. |
| 2.1/2 Fin | 5.Fl/Stair | 8. |
| 3.3/4 Fin | 6. | 9.None |
| Insulation | **1 Full** | |
| 1.Full | 4.Minimal | 7. |
| 2.Heavy | 5.Partial | 8. |
| 3.Capped | 6. | 9.None |
| Unfinished % | **0%** | |
| Grade & Factor | **3 Average 100%** | |
| 1.E Grade | 4.B Grade | 7.AAA Grad |
| 2.D Grade | 5.A Grade | 8.SC Grade |
| 3.C Grade | 6.AA Grade | 9.Same |
| SQFT (Footprint) | **1328** | |
| Condition | **4 Average** | |
| 1.Poor | 4.Avg | 7.V G |
| 2.Fair | 5.Avg+ | 8.Exc |
| 3.Avg- | 6.Good | 9.Same |
| Phys. % Good | **0%** | |
| Funct. % Good | **95%** | |
| Functional Code | **6 2014 ADJUSTMENT** | |
| 1.Incomp | 4.Delap | 7.Seasonal |
| 2.O-Built | 5.Bsmt | 8. |
| 3.Fire | 6.2014 ADJ | 9.None |
| Econ. % Good | **100%** | |
| Economic Code | **None** | |
| 0.None | 3.No Power | 7. |
| 1.Location | 4.Generate | 8. |
| 2.Encroach | 9.None | 9. |
| Entrance Code | **0** | |
| 1.Interior | 4.Vacant | 7. |
| 2.Refusal | 5.Estimate | 8. |
| 3.Informed | 6. | 9. |
| Information Code | **0** | |
| 1.Owner | 4.Agent | 7. |
| 2.Relative | 5.Estimate | 8. |
| 3.Tenant | 6.Other | 9. |

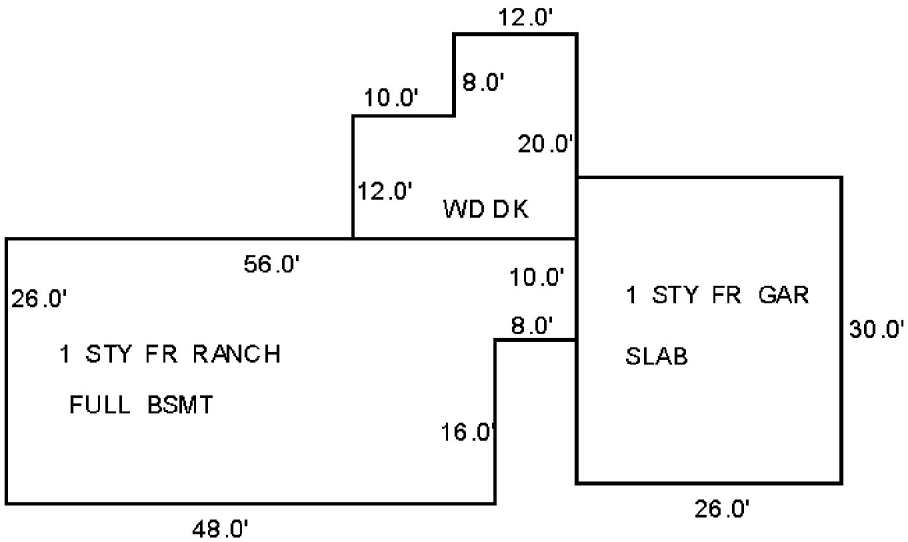


Date Inspected

## Additions, Outbuildings & Improvements

| Type | Year | Units | Grade | Cond | Phys. | Funct. | Sound Value |
|---|---|---|---|---|---|---|---|
| 68 Wood Deck | 1990 | 360 | 0 0 | 0 | 0 % | 0 % | |
| 81 1 SF GARAGE | 0 | 780 | 0 0 | 0 | 0 % | 0 % | |
| | | | | | % | % | |
| | | | | | % | % | |
| | | | | | % | % | |
| | | | | | % | % | |
| | | | | | % | % | |
| | | | | | % | % | |
| | | | | | % | % | |
| | | | | | % | % | |

1.One Story Fram
2.Two Story Fram
3.Three Story Fr
4.1 & 1/2 Story
5.1 & 3/4 Story
6.2 & 1/2 Story
21.Open Frame Por
22.Encl Frame Por
23.Frame Garage
24.Frame Shed
25.Frame Bay Wind
26.1SFr Overhang
27.Unfin Basement
28.Unfinished Att
29.Finished Attic

Map Lot 111-015 Account 1538 Location 558 EASTSIDE ROAD Card 1 Of 1 10/01/2020

PHIPPEN, SANFORD
566 EASTSIDE ROAD
HANCOCK ME 04640

B1857P341

## Property Data

Neighborhood **18 Neighborhood 18**

Tree Growth Year **0**

TREE GROWTH RECERTIFY **0**

STATE SALE CODE **0**

Zone/Land Use **11 Residential**

Secondary Zone

Topography

1.Level 4.Below St 7.
2.Rolling 5.Low 8.
3.Above St 6.Swampy 9.

Utilities

1.Public 4.Dr Well 7.Cesspool
2.Water 5.Dug Well 8.
3.Sewer 6.Septic 9.None

Street **1 Paved**

1.Paved 4.Proposed 7.
2.Semi Imp 5. 8.
3.Gravel 6. 9.None

REVIEW STRUCTURE YEAR **0**

RENTAL? 0=NO 1=YES **0**

## Sale Data

Sale Date

Price

Sale Type

1.Land 4.Mobile 7.
2.L & B 5.Other 8.
3.Building 6. 9.

Financing

1.Convent 4.Seller 7.
2.FHA/VA 5.Private 8.
3.Assumed 6.Cash 9.Unknown

Validity

1.Valid 4.Split 7.Changes
2.Related 5.Partial 8.Other
3.Distress 6.Exempt 9.Fr Ffclse

Verified

1.Buyer 4.Agent 7.Family
2.Seller 5.Pub Rec 8.Other
3.Lender 6.MLS 9.

## Assessment Record

| Year | Land | Buildings | Exempt | Total |
|---|---|---|---|---|
| 2007 | 52,900 | 23,400 | 13,000 | 63,300 |
| 2008 | 52,900 | 23,300 | 13,000 | 63,200 |
| 2009 | 52,900 | 23,300 | 13,000 | 63,200 |
| 2010 | 52,900 | 23,300 | 10,000 | 66,200 |
| 2011 | 52,900 | 23,300 | 10,000 | 66,200 |
| 2012 | 52,900 | 23,300 | 0 | 76,200 |
| 2013 | 52,900 | 23,300 | 0 | 76,200 |
| 2014 | 52,900 | 0 | 0 | 52,900 |
| 2015 | 52,900 | 0 | 0 | 52,900 |
| 2016 | 52,900 | 0 | 0 | 52,900 |
| 2017 | 52,900 | 0 | 0 | 52,900 |
| 2018 | 52,900 | 0 | 0 | 52,900 |
| 2019 | 52,900 | 0 | 0 | 52,900 |
| 2020 | 52,900 | 0 | 0 | 52,900 |

## Land Data

| Front Foot | Type | Effective Frontage | Effective Depth | Influence Factor | Influence Code |
|---|---|---|---|---|---|
| 11.Regular Lot | | | | % | |
| 12.Delta Triangle | | | | % | |
| 13.Nabla Triangle | | | | % | |
| 14.Rear Land | | | | % | |
| 15.Miscellaneous | | | | % | |
| | | | | % | |
| | | | | % | |
| **Square Foot** | | **Square Feet** | | | |
| 16.Regular Lot | | | | % | |
| 17.Secondary Lot | | | | % | |
| 18.Excess Land | | | | % | |
| 19.Condominium | | | | % | |
| 20.Miscellaneous | | | | % | |
| | | | | % | |
| | | | | % | |
| **Fract. Acre** | | **Acreage/Sites** | | | |
| 21.Homesite (Frac | 21 | 0.90 | | 100 % | 0 |
| 22.Baselot (Fract | 44 | 1.00 | | 100 % | 0 |
| 23.Misc (Fract) | | | | % | |
| **Acres** | | | | % | |
| 24.Excess Acres 1 | | | | % | |
| 25.Excess Acres 5 | | | | % | |
| 26.Excess Acres 2 | | | | % | |
| 27.Excess Acres 5 | | | | % | |
| 28.Excess Acres 1 | | | | % | |
| 29.Excess acres | | | | % | |

**Total Acreage** 0.90

### Influence Codes

1.Unimproved
2.Excess Frtg
3.Topography
4.Size/Shape
5.Access
6.Restriction
7.Corner Infl
8.Environment
9.Fract Share
**Acres**
30.Industrial Sit
31.Working Waterf
32.Cultivated Cro
33.Pasture
34.Softwood (Farm
35.Mixed Wood (Fa
36.Hardwood (Farm
37.Softwood
38.Mixed Wood
39.Hardwood
40.Wasteland
41.Gravel Pit
42.Mobile Home Si
43.Location Base
44.Lot Improvemen
45.Waterfront A
46.Lobster Pound

Inspection Witnessed By:

X Date

| No./Date | Description | Date Insp. |
|---|---|---|
| | | |
| | | |
| | | |

Notes:

**Hancock 2020**

# Hancock 2020

Map Lot 111-015 | Account 1538 | Location 558 EASTSIDE ROAD | Card 1 Of 1 | 10/01/2020

| Building Style | | |
|---|---|---|
| 0.Uncoded | 4.Cape | 8.Log |
| 1.Conv. | 5.Garrison | 9.Other |
| 2.Ranch | 6.Colonial | 10.Dutch C |
| 3.R Ranch | 7.Contemp | 11.Farmhou |

Dwelling Units

Other Units

| Stories | | |
|---|---|---|
| 1.1 | 4.1.5 | 7.3.5 |
| 2.2 | 5.1.75 | 8. |
| 3.3 | 6.2.5 | 9. |

| Exterior Walls | | |
|---|---|---|
| 0.Uncoded | 4.Asbestos | 8.Stone |
| 1.Wood | 5.Stucco | 9.Other |
| 2.Vin/Al | 6.Brick Ve | 10.Concret |
| 3.Compos. | 7.Solid Br | 12. |

| Roof Surface | | |
|---|---|---|
| 1.Asphalt | 4.Composit | 7. |
| 2.Slate | 5.Wood | 8. |
| 3.Metal | 6.Other | 9. |

SF Masonry Trim

OPEN-3-CUSTOM

OPEN-4-CUSTOM

Year Built

Year Remodeled

| Foundation | | |
|---|---|---|
| 1.Concrete | 4.Wood | 7. |
| 2.C Block | 5.Slab | 8. |
| 3.Br/Stone | 6.Piers | 9. |

| Basement | | |
|---|---|---|
| 1.1/4 Bmt | 4.Full Bmt | 7. |
| 2.1/2 Bmt | 5.None | 8. |
| 3.3/4 Bmt | 6. | 9.None |

Bsmt Gar # Cars

| Wet Basement | | |
|---|---|---|
| 1.Dry | 4. | 7. |
| 2.Damp | 5. | 8. |
| 3.Wet | 6. | 9. |

SF Bsmt Living

Fin Bsmt Grade

OPEN-5-CUSTOMIZE

| Heat Type **100%** | | |
|---|---|---|
| 0.Uncoded | 4.Steam | 8.Fl/Wall |
| 1.HWBB | 5.FWA | 9.No Heat |
| 2.HWCI | 6.GravWA | 10.Radiabt |
| 3.H Pump | 7.Electric | 12. |

| Cool Type **100%** | | |
|---|---|---|
| 1.Refrig | 4.W&C Air | 7. |
| 2.Evapor | 5. | 8. |
| 3.H Pump | 6. | 9.None |

| Kitchen Style | | |
|---|---|---|
| 1.Modern | 4.Obsolete | 7. |
| 2.Typical | 5. | 8. |
| 3.Old Type | 6. | 9.None |

| Bath(s) Style | | |
|---|---|---|
| 1.Modern | 4.Obsolete | 7. |
| 2.Typical | 5. | 8. |
| 3.Old Type | 6. | 9.None |

# Rooms

# Bedrooms

# Full Baths

# Half Baths

# Addn Fixtures

# Fireplaces

TRIO Software
A Division of Harris Computer Systems

| Layout | | |
|---|---|---|
| 1.Typical | 4. | 7. |
| 2.Inadeq | 5. | 8. |
| 3.Horrid | 6. | 9. |

| Attic | | |
|---|---|---|
| 1.1/4 Fin | 4.Full Fin | 7. |
| 2.1/2 Fin | 5.Fl/Stair | 8. |
| 3.3/4 Fin | 6. | 9.None |

| Insulation | | |
|---|---|---|
| 1.Full | 4.Minimal | 7. |
| 2.Heavy | 5.Partial | 8. |
| 3.Capped | 6. | 9.None |

Unfinished %

| Grade & Factor | | |
|---|---|---|
| 1.E Grade | 4.B Grade | 7.AAA Grad |
| 2.D Grade | 5.A Grade | 8.SC Grade |
| 3.C Grade | 6.AA Grade | 9.Same |

SQFT (Footprint)

| Condition | | |
|---|---|---|
| 1.Poor | 4.Avg | 7.V G |
| 2.Fair | 5.Avg+ | 8.Exc |
| 3.Avg- | 6.Good | 9.Same |

Phys. % Good

Funct. % Good

| Functional Code | | |
|---|---|---|
| 1.Incomp | 4.Delap | 7.Seasonal |
| 2.O-Built | 5.Bsmt | 8. |
| 3.Fire | 6.2014 ADJ | 9.None |

Econ. % Good

| Economic Code | | |
|---|---|---|
| 0.None | 3.No Power | 7. |
| 1.Location | 4.Generate | 8. |
| 2.Encroach | 9.None | 9. |

| Entrance Code **0** | | |
|---|---|---|
| 1.Interior | 4.Vacant | 7. |
| 2.Refusal | 5.Estimate | 8. |
| 3.Informed | 6. | 9. |

| Information Code **0** | | |
|---|---|---|
| 1.Owner | 4.Agent | 7. |
| 2.Relative | 5.Estimate | 8. |
| 3.Tenant | 6.Other | 9. |

Date Inspected

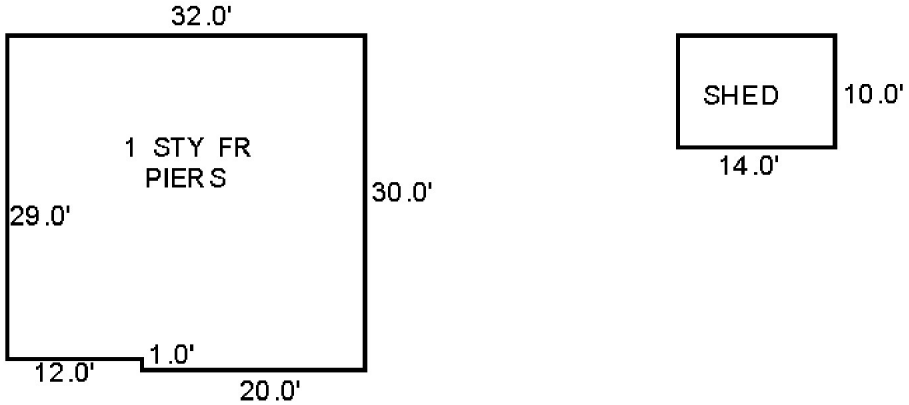

**Additions, Outbuildings & Improvements**

| Type | Year | Units | Grade | Cond | Phys. | Funct. | Sound Value |
|---|---|---|---|---|---|---|---|
| | | | | | % | % | |
| | | | | | % | % | |
| | | | | | % | % | |
| | | | | | % | % | |
| | | | | | % | % | |
| | | | | | % | % | |
| | | | | | % | % | |
| | | | | | % | % | |
| | | | | | % | % | |
| | | | | | % | % | |

1.One Story Fram
2.Two Story Fram
3.Three Story Fr
4.1 & 1/2 Story
5.1 & 3/4 Story
6.2 & 1/2 Story
21.Open Frame Por
22.Encl Frame Por
23.Frame Garage
24.Frame Shed
25.Frame Bay Wind
26.1SFr Overhang
27.Unfin Basement
28.Unfinished Att
29.Finished Attic

Map Lot 111-016 Account 1536 Location 566 EASTSIDE ROAD Card 1 Of 1 10/01/2020

PHIPPEN, SANFORD E
566 EASTSIDE ROAD
HANCOCK ME 04640

B2865P470

## Property Data

Neighborhood **18 Neighborhood 18**

Tree Growth Year **0**

TREE GROWTH RECERTIFY **0**

STATE SALE CODE **0**

Zone/Land Use **11 Residential**

Secondary Zone

Topography

| | | |
|---|---|---|
| 1.Level | 4.Below St | 7. |
| 2.Rolling | 5.Low | 8. |
| 3.Above St | 6.Swampy | 9. |

Utilities

| | | |
|---|---|---|
| 1.Public | 4.Dr Well | 7.Cesspool |
| 2.Water | 5.Dug Well | 8. |
| 3.Sewer | 6.Septic | 9.None |

Street **1 Paved**

| | | |
|---|---|---|
| 1.Paved | 4.Proposed | 7. |
| 2.Semi Imp | 5. | 8. |
| 3.Gravel | 6. | 9.None |

REVIEW STRUCTURE YEAR **0**

RENTAL? 0=NO 1=YES **0**

## Sale Data

Sale Date

Price

Sale Type

| | | |
|---|---|---|
| 1.Land | 4.Mobile | 7. |
| 2.L & B | 5.Other | 8. |
| 3.Building | 6. | 9. |

Financing

| | | |
|---|---|---|
| 1.Convent | 4.Seller | 7. |
| 2.FHA/VA | 5.Private | 8. |
| 3.Assumed | 6.Cash | 9.Unknown |

Validity

| | | |
|---|---|---|
| 1.Valid | 4.Split | 7.Changes |
| 2.Related | 5.Partial | 8.Other |
| 3.Distress | 6.Exempt | 9.Fr Ffclse |

Verified

| | | |
|---|---|---|
| 1.Buyer | 4.Agent | 7.Family |
| 2.Seller | 5.Pub Rec | 8.Other |
| 3.Lender | 6.MLS | 9. |

## Assessment Record

| Year | Land | Buildings | Exempt | Total |
|---|---|---|---|---|
| 2007 | 55,000 | 95,100 | 0 | 150,100 |
| 2008 | 55,000 | 92,800 | 0 | 147,800 |
| 2009 | 55,000 | 92,800 | 0 | 147,800 |
| 2010 | 55,000 | 92,800 | 0 | 147,800 |
| 2011 | 55,000 | 92,800 | 0 | 147,800 |
| 2012 | 55,000 | 92,800 | 10,000 | 137,800 |
| 2013 | 55,000 | 92,800 | 10,000 | 137,800 |
| 2014 | 55,000 | 83,500 | 10,800 | 127,700 |
| 2015 | 55,000 | 83,500 | 11,000 | 127,500 |
| 2016 | 55,000 | 83,500 | 16,500 | 122,000 |
| 2017 | 55,000 | 83,500 | 22,000 | 116,500 |
| 2018 | 55,000 | 83,500 | 22,000 | 116,500 |
| 2019 | 55,000 | 83,500 | 22,000 | 116,500 |
| 2020 | 55,000 | 83,500 | 25,000 | 113,500 |

## Land Data

| Front Foot | Type | Effective Frontage | Effective Depth | Influence Factor | Influence Code |
|---|---|---|---|---|---|
| 11.Regular Lot | | | | % | |
| 12.Delta Triangle | | | | % | |
| 13.Nabla Triangle | | | | % | |
| 14.Rear Land | | | | % | |
| 15.Miscellaneous | | | | % | |
| | | | | % | |
| | | | | % | |
| **Square Foot** | | **Square Feet** | | | |
| 16.Regular Lot | | | | % | |
| 17.Secondary Lot | | | | % | |
| 18.Excess Land | | | | % | |
| 19.Condominium | | | | % | |
| 20.Miscellaneous | | | | % | |
| | | | | % | |
| | | | | % | |
| **Fract. Acre** | | **Acreage/Sites** | | | |
| 21.Homesite (Frac | 21 | 1.00 | 100 | % | 0 |
| 22.Baselot (Fract | 40 | 0.20 | 100 | % | 0 |
| 23.Misc (Fract) | 44 | 1.00 | 100 | % | 0 |
| **Acres** | | | | % | |
| 24.Excess Acres 1 | | | | % | |
| 25.Excess Acres 5 | | | | % | |
| 26.Excess Acres 2 | | | | % | |
| 27.Excess Acres 5 | | | | % | |
| 28.Excess Acres 1 | | | | % | |
| 29.Excess acres | | | | % | |

**Total Acreage** 1.20

### Influence Codes

1.Unimproved
2.Excess Frtg
3.Topography
4.Size/Shape
5.Access
6.Restriction
7.Corner Infl
8.Environment
9.Fract Share
**Acres**
30.Industrial Sit
31.Working Waterf
32.Cultivated Cro
33.Pasture
34.Softwood (Farm
35.Mixed Wood (Fa
36.Hardwood (Farm
37.Softwood
38.Mixed Wood
39.Hardwood
40.Wasteland
41.Gravel Pit
42.Mobile Home Si
43.Location Base
44.Lot Improvemen
45.Waterfront A
46.Lobster Pound

Inspection Witnessed By:

X Date

| No./Date | Description | Date Insp. |
|---|---|---|
| | | |
| | | |
| | | |

Notes:

**Hancock 2020**

# Hancock 2020

Map Lot 111-016 | Account 1536 | Location 566 EASTSIDE ROAD | Card 1 Of 1 | 10/01/2020

| | | |
|---|---|---|
| Building Style **1 Conventional** | | |
| 0.Uncoded | 4.Cape | 8.Log |
| 1.Conv. | 5.Garrison | 9.Other |
| 2.Ranch | 6.Colonial | 10.Dutch C |
| 3.R Ranch | 7.Contemp | 11.Farmhou |
| Dwelling Units **1** | | |
| Other Units **0** | | |
| Stories **5 One & 3/4 Story** | | |
| 1.1 | 4.1.5 | 7.3.5 |
| 2.2 | 5.1.75 | 8. |
| 3.3 | 6.2.5 | 9. |
| Exterior Walls **1 Wood Siding** | | |
| 0.Uncoded | 4.Asbestos | 8.Stone |
| 1.Wood | 5.Stucco | 9.Other |
| 2.Vin/Al | 6.Brick Ve | 10.Concret |
| 3.Compos. | 7.Solid Br | 12. |
| Roof Surface **1 Asphalt Shingles** | | |
| 1.Asphalt | 4.Composit | 7. |
| 2.Slate | 5.Wood | 8. |
| 3.Metal | 6.Other | 9. |
| SF Masonry Trim **0** | | |
| OPEN-3-CUSTOM **0** | | |
| OPEN-4-CUSTOM **0** | | |
| Year Built **1870** | | |
| Year Remodeled **0** | | |
| Foundation **3 Brick &/or Stone** | | |
| 1.Concrete | 4.Wood | 7. |
| 2.C Block | 5.Slab | 8. |
| 3.Br/Stone | 6.Piers | 9. |
| Basement **4 Full Basement** | | |
| 1.1/4 Bmt | 4.Full Bmt | 7. |
| 2.1/2 Bmt | 5.None | 8. |
| 3.3/4 Bmt | 6. | 9.None |
| Bsmt Gar # Cars **0** | | |
| Wet Basement **2 Damp Basement** | | |
| 1.Dry | 4. | 7. |
| 2.Damp | 5. | 8. |
| 3.Wet | 6. | 9. |

| | | |
|---|---|---|
| SF Bsmt Living **0** | | |
| Fin Bsmt Grade **0 0** | | |
| OPEN-5-CUSTOMIZE **0** | | |
| Heat Type **100%** **1 Hot Water BB** | | |
| 0.Uncoded | 4.Steam | 8.Fl/Wall |
| 1.HWBB | 5.FWA | 9.No Heat |
| 2.HWCI | 6.GravWA | 10.Radiabt |
| 3.H Pump | 7.Electric | 12. |
| Cool Type **100%** **9 None** | | |
| 1.Refrig | 4.W&C Air | 7. |
| 2.Evapor | 5. | 8. |
| 3.H Pump | 6. | 9.None |
| Kitchen Style **2 Typical** | | |
| 1.Modern | 4.Obsolete | 7. |
| 2.Typical | 5. | 8. |
| 3.Old Type | 6. | 9.None |
| Bath(s) Style **2 Typical Bath(s)** | | |
| 1.Modern | 4.Obsolete | 7. |
| 2.Typical | 5. | 8. |
| 3.Old Type | 6. | 9.None |
| # Rooms **7** | | |
| # Bedrooms **3** | | |
| # Full Baths **1** | | |
| # Half Baths **0** | | |
| # Addn Fixtures **0** | | |
| # Fireplaces **1** | | |

TRIO Software
A Division of Harris Computer Systems

| | | |
|---|---|---|
| Layout **1 Typical** | | |
| 1.Typical | 4. | 7. |
| 2.Inadeq | 5. | 8. |
| 3.Horrid | 6. | 9. |
| Attic **9 None** | | |
| 1.1/4 Fin | 4.Full Fin | 7. |
| 2.1/2 Fin | 5.Fl/Stair | 8. |
| 3.3/4 Fin | 6. | 9.None |
| Insulation **9 None** | | |
| 1.Full | 4.Minimal | 7. |
| 2.Heavy | 5.Partial | 8. |
| 3.Capped | 6. | 9.None |
| Unfinished % **0%** | | |
| Grade & Factor **3 Average 100%** | | |
| 1.E Grade | 4.B Grade | 7.AAA Grad |
| 2.D Grade | 5.A Grade | 8.SC Grade |
| 3.C Grade | 6.AA Grade | 9.Same |
| SQFT (Footprint) **890** | | |
| Condition **4 Average** | | |
| 1.Poor | 4.Avg | 7.V G |
| 2.Fair | 5.Avg+ | 8.Exc |
| 3.Avg- | 6.Good | 9.Same |
| Phys. % Good **0%** | | |
| Funct. % Good **90%** | | |
| Functional Code **6 2014 ADJUSTMENT** | | |
| 1.Incomp | 4.Delap | 7.Seasonal |
| 2.O-Built | 5.Bsmt | 8. |
| 3.Fire | 6.2014 ADJ | 9.None |
| Econ. % Good **100%** | | |
| Economic Code **None** | | |
| 0.None | 3.No Power | 7. |
| 1.Location | 4.Generate | 8. |
| 2.Encroach | 9.None | 9. |
| Entrance Code **0** | | |
| 1.Interior | 4.Vacant | 7. |
| 2.Refusal | 5.Estimate | 8. |
| 3.Informed | 6. | 9. |
| Information Code **0** | | |
| 1.Owner | 4.Agent | 7. |
| 2.Relative | 5.Estimate | 8. |
| 3.Tenant | 6.Other | 9. |

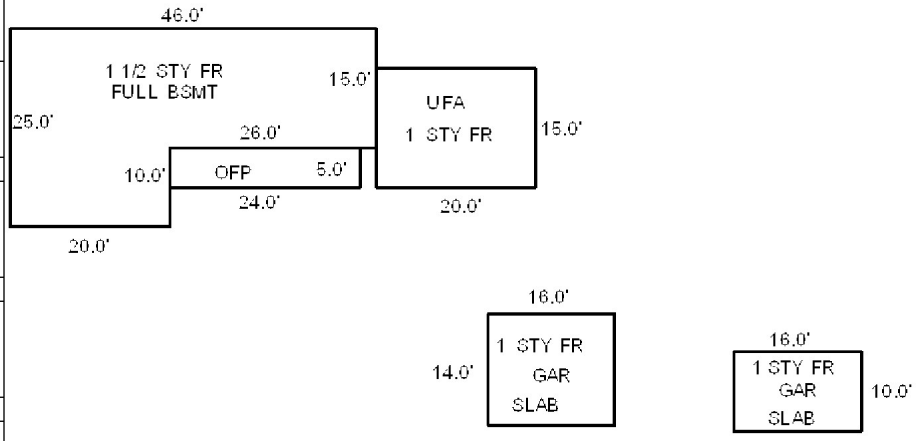


Date Inspected

## Additions, Outbuildings & Improvements

| Type | Year | Units | Grade | Cond | Phys. | Funct. | Sound Value |
|---|---|---|---|---|---|---|---|
| 21 Open Frame | 0 | 128 | 0 0 | 0 | 0 % | 0 % | |
| 1 One Story Frame | 0 | 300 | 0 0 | 0 | 0 % | 0 % | |
| 24 Frame Shed | 0 | 224 | 0 0 | 0 | 0 % | 0 % | |
| 24 Frame Shed | 0 | 160 | 0 0 | 0 | 0 % | 0 % | |
| | | | | | % | % | |
| | | | | | % | % | |
| | | | | | % | % | |
| | | | | | % | % | |
| | | | | | % | % | |
| | | | | | % | % | |

1.One Story Fram
2.Two Story Fram
3.Three Story Fr
4.1 & 1/2 Story
5.1 & 3/4 Story
6.2 & 1/2 Story
21.Open Frame Por
22.Encl Frame Por
23.Frame Garage
24.Frame Shed
25.Frame Bay Wind
26.1SFr Overhang
27.Unfin Basement
28.Unfinished Att
29.Finished Attic

Map Lot 111-017 Account 121 Location 572 EASTSIDE ROAD Card 1 Of 1 10/01/2020

TROMBETTO, AIMEE T
572 EASTSIDE RD
HANCOCK ME 04640

B2342P306 B6950P608

Previous Owner
BOLSHAW, JOEL
BOLSHAW, MARY
572 EASTSIDE ROAD
HANCOCK ME 04640
Sale Date: 5/16/2019

Inspection Witnessed By:

X Date

| No./Date | Description | Date Insp. |
|---|---|---|
| | | |
| | | |
| | | |

Notes:

**Hancock 2020**

## Property Data

| | | |
|---|---|---|
| Neighborhood | **18 Neighborhood 18** | |
| Tree Growth Year | **0** | |
| TREE GROWTH RECERTIFY | **0** | |
| STATE SALE CODE | **0** | |
| Zone/Land Use | **11 Residential** | |
| Secondary Zone | | |
| Topography | **9** | **9** |

1.Level 4.Below St 7.
2.Rolling 5.Low 8.
3.Above St 6.Swampy 9.

| | | |
|---|---|---|
| Utilities | **9 None** | **9 None** |

1.Public 4.Dr Well 7.Cesspool
2.Water 5.Dug Well 8.
3.Sewer 6.Septic 9.None

| | | |
|---|---|---|
| Street | **1 Paved** | |

1.Paved 4.Proposed 7.
2.Semi Imp 5. 8.
3.Gravel 6. 9.None

| | |
|---|---|
| REVIEW STRUCTURE YEAR | **2008** |
| RENTAL? 0=NO 1=YES | **1** |

## Sale Data

| | |
|---|---|
| Sale Date | **5/16/2019** |
| Price | **172,675** |
| Sale Type | **2 Land & Buildings** |

1.Land 4.Mobile 7.
2.L & B 5.Other 8.
3.Building 6. 9.

| | |
|---|---|
| Financing | **9 Unknown** |

1.Convent 4.Seller 7.
2.FHA/VA 5.Private 8.
3.Assumed 6.Cash 9.Unknown

| | |
|---|---|
| Validity | **1 Arms Length Sale** |

1.Valid 4.Split 7.Changes
2.Related 5.Partial 8.Other
3.Distress 6.Exempt 9.Fr Ffclse

| | |
|---|---|
| Verified | **5 Public Record** |

1.Buyer 4.Agent 7.Family
2.Seller 5.Pub Rec 8.Other
3.Lender 6.MLS 9.

## Assessment Record

| Year | Land | Buildings | Exempt | Total |
|---|---|---|---|---|
| 2007 | 48,500 | 83,800 | 18,000 | 114,300 |
| 2008 | 48,500 | 84,600 | 19,000 | 114,100 |
| 2009 | 48,500 | 84,600 | 19,000 | 114,100 |
| 2010 | 48,500 | 84,600 | 16,000 | 117,100 |
| 2011 | 48,500 | 84,600 | 16,000 | 117,100 |
| 2012 | 48,500 | 84,600 | 16,000 | 117,100 |
| 2013 | 48,500 | 84,600 | 16,000 | 117,100 |
| 2014 | 48,500 | 76,100 | 17,280 | 107,320 |
| 2015 | 48,500 | 76,100 | 17,600 | 107,000 |
| 2016 | 48,500 | 76,100 | 23,100 | 101,500 |
| 2017 | 48,500 | 76,100 | 28,600 | 96,000 |
| 2018 | 48,500 | 76,100 | 28,600 | 96,000 |
| 2019 | 48,500 | 76,100 | 28,600 | 96,000 |
| 2020 | 48,500 | 76,100 | 0 | 124,600 |

## Land Data

| Front Foot | Type | Effective Frontage | Effective Depth | Influence Factor | Influence Code |
|---|---|---|---|---|---|
| 11.Regular Lot | | | | % | |
| 12.Delta Triangle | | | | % | |
| 13.Nabla Triangle | | | | % | |
| 14.Rear Land | | | | % | |
| 15.Miscellaneous | | | | % | |
| | | | | % | |
| | | | | % | |
| **Square Foot** | | **Square Feet** | | | |
| 16.Regular Lot | | | | % | |
| 17.Secondary Lot | | | | % | |
| 18.Excess Land | | | | % | |
| 19.Condominium | | | | % | |
| 20.Miscellaneous | | | | % | |
| | | | | % | |
| | | | | % | |
| **Fract. Acre** | | **Acreage/Sites** | | | |
| 21.Homesite (Frac | 21 | 0.70 | | 100 % | 0 |
| 22.Baselot (Fract | 44 | 1.00 | | 100 % | 0 |
| 23.Misc (Fract) | | | | % | |
| **Acres** | | | | % | |
| 24.Excess Acres 1 | | | | % | |
| 25.Excess Acres 5 | | | | % | |
| 26.Excess Acres 2 | | | | % | |
| 27.Excess Acres 5 | | | | % | |
| 28.Excess Acres 1 | | | | % | |
| 29.Excess acres | | | | % | |

**Total Acreage** 0.70

### Influence Codes

1.Unimproved
2.Excess Frtg
3.Topography
4.Size/Shape
5.Access
6.Restriction
7.Corner Infl
8.Environment
9.Fract Share
**Acres**
30.Industrial Sit
31.Working Waterf
32.Cultivated Cro
33.Pasture
34.Softwood (Farm
35.Mixed Wood (Fa
36.Hardwood (Farm
37.Softwood
38.Mixed Wood
39.Hardwood
40.Wasteland
41.Gravel Pit
42.Mobile Home Si
43.Location Base
44.Lot Improvemen
45.Waterfront A
46.Lobster Pound

# Hancock 2020

Map Lot 111-017 | Account 121 | Location 572 EASTSIDE ROAD | Card 1 Of 1 | 10/01/2020

| | | |
|---|---|---|
| Building Style | **1 Conventional** | |
| 0.Uncoded | 4.Cape | 8.Log |
| 1.Conv. | 5.Garrison | 9.Other |
| 2.Ranch | 6.Colonial | 10.Dutch C |
| 3.R Ranch | 7.Contemp | 11.Farmhou |
| Dwelling Units | **1** | |
| Other Units | **0** | |
| Stories | **5 One & 3/4 Story** | |
| 1.1 | 4.1.5 | 7.3.5 |
| 2.2 | 5.1.75 | 8. |
| 3.3 | 6.2.5 | 9. |
| Exterior Walls | **1 Wood Siding** | |
| 0.Uncoded | 4.Asbestos | 8.Stone |
| 1.Wood | 5.Stucco | 9.Other |
| 2.Vin/Al | 6.Brick Ve | 10.Concret |
| 3.Compos. | 7.Solid Br | 12. |
| Roof Surface | **1 Asphalt Shingles** | |
| 1.Asphalt | 4.Composit | 7. |
| 2.Slate | 5.Wood | 8. |
| 3.Metal | 6.Other | 9. |
| SF Masonry Trim | **0** | |
| OPEN-3-CUSTOM | **0** | |
| OPEN-4-CUSTOM | **0** | |
| Year Built | **1920** | |
| Year Remodeled | **0** | |
| Foundation | **3 Brick &/or Stone** | |
| 1.Concrete | 4.Wood | 7. |
| 2.C Block | 5.Slab | 8. |
| 3.Br/Stone | 6.Piers | 9. |
| Basement | **4 Full Basement** | |
| 1.1/4 Bmt | 4.Full Bmt | 7. |
| 2.1/2 Bmt | 5.None | 8. |
| 3.3/4 Bmt | 6. | 9.None |
| Bsmt Gar # Cars | **0** | |
| Wet Basement | **2 Damp Basement** | |
| 1.Dry | 4. | 7. |
| 2.Damp | 5. | 8. |
| 3.Wet | 6. | 9. |

| | | |
|---|---|---|
| SF Bsmt Living | **0** | |
| Fin Bsmt Grade | **0 0** | |
| OPEN-5-CUSTOMIZE | **0** | |
| Heat Type | **100% 1 Hot Water BB** | |
| 0.Uncoded | 4.Steam | 8.Fl/Wall |
| 1.HWBB | 5.FWA | 9.No Heat |
| 2.HWCI | 6.GravWA | 10.Radiabt |
| 3.H Pump | 7.Electric | 12. |
| Cool Type | **100% 9 None** | |
| 1.Refrig | 4.W&C Air | 7. |
| 2.Evapor | 5. | 8. |
| 3.H Pump | 6. | 9.None |
| Kitchen Style | **2 Typical** | |
| 1.Modern | 4.Obsolete | 7. |
| 2.Typical | 5. | 8. |
| 3.Old Type | 6. | 9.None |
| Bath(s) Style | **2 Typical Bath(s)** | |
| 1.Modern | 4.Obsolete | 7. |
| 2.Typical | 5. | 8. |
| 3.Old Type | 6. | 9.None |
| # Rooms | **7** | |
| # Bedrooms | **3** | |
| # Full Baths | **1** | |
| # Half Baths | **1** | |
| # Addn Fixtures | **0** | |
| # Fireplaces | **0** | |

TRIO Software
A Division of Harris Computer Systems

| | | |
|---|---|---|
| Layout | **1 Typical** | |
| 1.Typical | 4. | 7. |
| 2.Inadeq | 5. | 8. |
| 3.Horrid | 6. | 9. |
| Attic | **5 Floor & Stairs** | |
| 1.1/4 Fin | 4.Full Fin | 7. |
| 2.1/2 Fin | 5.Fl/Stair | 8. |
| 3.3/4 Fin | 6. | 9.None |
| Insulation | **5 Partial** | |
| 1.Full | 4.Minimal | 7. |
| 2.Heavy | 5.Partial | 8. |
| 3.Capped | 6. | 9.None |
| Unfinished % | **0%** | |
| Grade & Factor | **3 Average 100%** | |
| 1.E Grade | 4.B Grade | 7.AAA Grad |
| 2.D Grade | 5.A Grade | 8.SC Grade |
| 3.C Grade | 6.AA Grade | 9.Same |
| SQFT (Footprint) | **720** | |
| Condition | **4 Average** | |
| 1.Poor | 4.Avg | 7.V G |
| 2.Fair | 5.Avg+ | 8.Exc |
| 3.Avg- | 6.Good | 9.Same |
| Phys. % Good | **0%** | |
| Funct. % Good | **90%** | |
| Functional Code | **6 2014 ADJUSTMENT** | |
| 1.Incomp | 4.Delap | 7.Seasonal |
| 2.O-Built | 5.Bsmt | 8. |
| 3.Fire | 6.2014 ADJ | 9.None |
| Econ. % Good | **100%** | |
| Economic Code | **None** | |
| 0.None | 3.No Power | 7. |
| 1.Location | 4.Generate | 8. |
| 2.Encroach | 9.None | 9. |
| Entrance Code | **0** | |
| 1.Interior | 4.Vacant | 7. |
| 2.Refusal | 5.Estimate | 8. |
| 3.Informed | 6. | 9. |
| Information Code | **0** | |
| 1.Owner | 4.Agent | 7. |
| 2.Relative | 5.Estimate | 8. |
| 3.Tenant | 6.Other | 9. |

Date Inspected

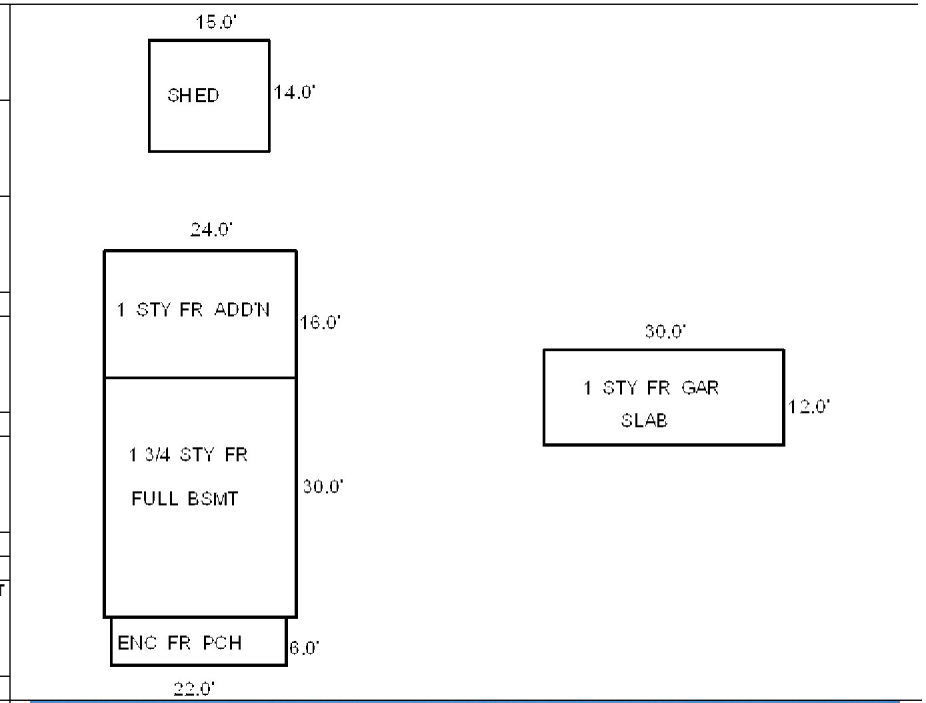

## Additions, Outbuildings & Improvements

| Type | Year | Units | Grade | Cond | Phys. | Funct. | Sound Value |
|---|---|---|---|---|---|---|---|
| 1 One Story Frame | 0 | 384 | 0 0 | 0 | 0 % | 0 % | |
| 22 Encl Frame Porch | 0 | 132 | 0 0 | 0 | 0 % | 0 % | |
| 81 1 SF GARAGE | 0 | 360 | 0 0 | 0 | 0 % | 0 % | |
| 24 Frame Shed | 0 | 210 | 0 0 | 0 | 0 % | 0 % | |
| | | | | | % | % | |
| | | | | | % | % | |
| | | | | | % | % | |
| | | | | | % | % | |
| | | | | | % | % | |
| | | | | | % | % | |

1.One Story Fram
2.Two Story Fram
3.Three Story Fr
4.1 & 1/2 Story
5.1 & 3/4 Story
6.2 & 1/2 Story
21.Open Frame Por
22.Encl Frame Por
23.Frame Garage
24.Frame Shed
25.Frame Bay Wind
26.1SFr Overhang
27.Unfin Basement
28.Unfinished Att
29.Finished Attic

Map Lot 111-018 | Account 199 | Location 580 EASTSIDE ROAD | Card 1 Of 1 | 10/01/2020

WHITMORE, HENRY J
580 EASTSIDE ROAD
HANCOCK ME 04640

B979P172

Previous Owner
CARTER, ALFRED & HEDWIG
580 EASTSIDE ROAD

HANCOCK ME 04640
Sale Date: 9/09/2010

Inspection Witnessed By:

X Date

| No./Date | Description | Date Insp. |
|---|---|---|
| | | |
| | | |
| | | |

Notes:

## Property Data

Neighborhood **18 Neighborhood 18**

Tree Growth Year **0**

TREE GROWTH RECERTIFY **0**

STATE SALE CODE **0**

Zone/Land Use **11 Residential**

Secondary Zone

Topography **9** **9**

1.Level 4.Below St 7.
2.Rolling 5.Low 8.
3.Above St 6.Swampy 9.

Utilities **9 None** **9 None**

1.Public 4.Dr Well 7.Cesspool
2.Water 5.Dug Well 8.
3.Sewer 6.Septic 9.None

Street **9 None**

1.Paved 4.Proposed 7.
2.Semi Imp 5. 8.
3.Gravel 6. 9.None

REVIEW STRUCTURE YEAR **0**

RENTAL? 0=NO 1=YES **0**

## Sale Data

Sale Date **9/09/2010**

Price **127,100**

Sale Type **2 Land & Buildings**

1.Land 4.Mobile 7.
2.L & B 5.Other 8.
3.Building 6. 9.

Financing **9 Unknown**

1.Convent 4.Seller 7.
2.FHA/VA 5.Private 8.
3.Assumed 6.Cash 9.Unknown

Validity **1 Arms Length Sale**

1.Valid 4.Split 7.Changes
2.Related 5.Partial 8.Other
3.Distress 6.Exempt 9.Fr Ffclse

Verified **5 Public Record**

1.Buyer 4.Agent 7.Family
2.Seller 5.Pub Rec 8.Other
3.Lender 6.MLS 9.

## Assessment Record

| Year | Land | Buildings | Exempt | Total |
|---|---|---|---|---|
| 2007 | 55,600 | 130,500 | 13,000 | 173,100 |
| 2008 | 55,600 | 130,500 | 13,000 | 173,100 |
| 2009 | 55,600 | 130,500 | 13,000 | 173,100 |
| 2010 | 55,600 | 130,500 | 10,000 | 176,100 |
| 2011 | 55,600 | 130,500 | 0 | 186,100 |
| 2012 | 55,600 | 130,500 | 10,000 | 176,100 |
| 2013 | 55,600 | 130,500 | 10,000 | 176,100 |
| 2014 | 55,600 | 124,000 | 10,800 | 168,800 |
| 2015 | 55,600 | 85,000 | 11,000 | 129,600 |
| 2016 | 55,600 | 88,200 | 16,500 | 127,300 |
| 2017 | 55,600 | 86,800 | 22,000 | 120,400 |
| 2018 | 55,600 | 86,800 | 22,000 | 120,400 |
| 2019 | 55,600 | 86,800 | 22,000 | 120,400 |
| 2020 | 55,600 | 86,800 | 25,000 | 117,400 |

## Land Data

| Front Foot | Type | Effective Frontage | Effective Depth | Influence Factor | Influence Code |
|---|---|---|---|---|---|
| 11.Regular Lot | | | | % | |
| 12.Delta Triangle | | | | % | |
| 13.Nabla Triangle | | | | % | |
| 14.Rear Land | | | | % | |
| 15.Miscellaneous | | | | % | |
| | | | | % | |
| | | | | % | |
| **Square Foot** | | **Square Feet** | | | |
| 16.Regular Lot | | | | % | |
| 17.Secondary Lot | | | | % | |
| 18.Excess Land | | | | % | |
| 19.Condominium | | | | % | |
| 20.Miscellaneous | | | | % | |
| | | | | % | |
| | | | | % | |
| **Fract. Acre** | | **Acreage/Sites** | | | |
| 21.Homesite (Frac | 21 | 1.00 | 100 | % | 0 |
| 22.Baselot (Fract | 24 | 0.50 | 100 | % | 0 |
| 23.Misc (Fract) | 44 | 1.00 | 100 | % | 0 |
| **Acres** | | | | % | |
| 24.Excess Acres 1 | | | | % | |
| 25.Excess Acres 5 | | | | % | |
| 26.Excess Acres 2 | | | | % | |
| 27.Excess Acres 5 | | | | % | |
| 28.Excess Acres 1 | | | | % | |
| 29.Excess acres | | | | % | |

**Total Acreage** 1.50

### Influence Codes

1.Unimproved
2.Excess Frtg
3.Topography
4.Size/Shape
5.Access
6.Restriction
7.Corner Infl
8.Environment
9.Fract Share
**Acres**
30.Industrial Sit
31.Working Waterf
32.Cultivated Cro
33.Pasture
34.Softwood (Farm
35.Mixed Wood (Fa
36.Hardwood (Farm
37.Softwood
38.Mixed Wood
39.Hardwood
40.Wasteland
41.Gravel Pit
42.Mobile Home Si
43.Location Base
44.Lot Improvemen
45.Waterfront A
46.Lobster Pound

**Hancock 2020**

# Hancock 2020

Map Lot 111-018 | Account 199 | Location 580 EASTSIDE ROAD | Card 1 Of 1 | 10/01/2020

| | | |
|---|---|---|
| Building Style **2 Ranch** | | |
| 0.Uncoded | 4.Cape | 8.Log |
| 1.Conv. | 5.Garrison | 9.Other |
| 2.Ranch | 6.Colonial | 10.Dutch C |
| 3.R Ranch | 7.Contemp | 11.Farmhou |
| Dwelling Units **1** | | |
| Other Units **0** | | |
| Stories **1 One Story** | | |
| 1.1 | 4.1.5 | 7.3.5 |
| 2.2 | 5.1.75 | 8. |
| 3.3 | 6.2.5 | 9. |
| Exterior Walls **2 Vinyl/Aluminum** | | |
| 0.Uncoded | 4.Asbestos | 8.Stone |
| 1.Wood | 5.Stucco | 9.Other |
| 2.Vin/Al | 6.Brick Ve | 10.Concret |
| 3.Compos. | 7.Solid Br | 12. |
| Roof Surface **1 Asphalt Shingles** | | |
| 1.Asphalt | 4.Composit | 7. |
| 2.Slate | 5.Wood | 8. |
| 3.Metal | 6.Other | 9. |
| SF Masonry Trim **100** | | |
| OPEN-3-CUSTOM **0** | | |
| OPEN-4-CUSTOM **0** | | |
| Year Built **1970** | | |
| Year Remodeled **1982** | | |
| Foundation **1 Concrete** | | |
| 1.Concrete | 4.Wood | 7. |
| 2.C Block | 5.Slab | 8. |
| 3.Br/Stone | 6.Piers | 9. |
| Basement **4 Full Basement** | | |
| 1.1/4 Bmt | 4.Full Bmt | 7. |
| 2.1/2 Bmt | 5.None | 8. |
| 3.3/4 Bmt | 6. | 9.None |
| Bsmt Gar # Cars **0** | | |
| Wet Basement **1 Dry Basement** | | |
| 1.Dry | 4. | 7. |
| 2.Damp | 5. | 8. |
| 3.Wet | 6. | 9. |

| | | |
|---|---|---|
| SF Bsmt Living **0** | | |
| Fin Bsmt Grade **0 0** | | |
| OPEN-5-CUSTOMIZE **0** | | |
| Heat Type **100% 1 Hot Water BB** | | |
| 0.Uncoded | 4.Steam | 8.Fl/Wall |
| 1.HWBB | 5.FWA | 9.No Heat |
| 2.HWCI | 6.GravWA | 10.Radiabt |
| 3.H Pump | 7.Electric | 12. |
| Cool Type **100% 9 None** | | |
| 1.Refrig | 4.W&C Air | 7. |
| 2.Evapor | 5. | 8. |
| 3.H Pump | 6. | 9.None |
| Kitchen Style **2 Typical** | | |
| 1.Modern | 4.Obsolete | 7. |
| 2.Typical | 5. | 8. |
| 3.Old Type | 6. | 9.None |
| Bath(s) Style **2 Typical Bath(s)** | | |
| 1.Modern | 4.Obsolete | 7. |
| 2.Typical | 5. | 8. |
| 3.Old Type | 6. | 9.None |
| # Rooms **4** | | |
| # Bedrooms **2** | | |
| # Full Baths **1** | | |
| # Half Baths **0** | | |
| # Addn Fixtures **0** | | |
| # Fireplaces **1** | | |

TRIO Software
A Division of Harris Computer Systems

| | | |
|---|---|---|
| Layout **1 Typical** | | |
| 1.Typical | 4. | 7. |
| 2.Inadeq | 5. | 8. |
| 3.Horrid | 6. | 9. |
| Attic **9 None** | | |
| 1.1/4 Fin | 4.Full Fin | 7. |
| 2.1/2 Fin | 5.Fl/Stair | 8. |
| 3.3/4 Fin | 6. | 9.None |
| Insulation **1 Full** | | |
| 1.Full | 4.Minimal | 7. |
| 2.Heavy | 5.Partial | 8. |
| 3.Capped | 6. | 9.None |
| Unfinished % **0%** | | |
| Grade & Factor **3 Average 100%** | | |
| 1.E Grade | 4.B Grade | 7.AAA Grad |
| 2.D Grade | 5.A Grade | 8.SC Grade |
| 3.C Grade | 6.AA Grade | 9.Same |
| SQFT (Footprint) **1144** | | |
| Condition **3 Below Average** | | |
| 1.Poor | 4.Avg | 7.V G |
| 2.Fair | 5.Avg+ | 8.Exc |
| 3.Avg- | 6.Good | 9.Same |
| Phys. % Good **0%** | | |
| Funct. % Good **95%** | | |
| Functional Code **6 2014 ADJUSTMENT** | | |
| 1.Incomp | 4.Delap | 7.Seasonal |
| 2.O-Built | 5.Bsmt | 8. |
| 3.Fire | 6.2014 ADJ | 9.None |
| Econ. % Good **100%** | | |
| Economic Code **None** | | |
| 0.None | 3.No Power | 7. |
| 1.Location | 4.Generate | 8. |
| 2.Encroach | 9.None | 9. |
| Entrance Code **0** | | |
| 1.Interior | 4.Vacant | 7. |
| 2.Refusal | 5.Estimate | 8. |
| 3.Informed | 6. | 9. |
| Information Code **0** | | |
| 1.Owner | 4.Agent | 7. |
| 2.Relative | 5.Estimate | 8. |
| 3.Tenant | 6.Other | 9. |

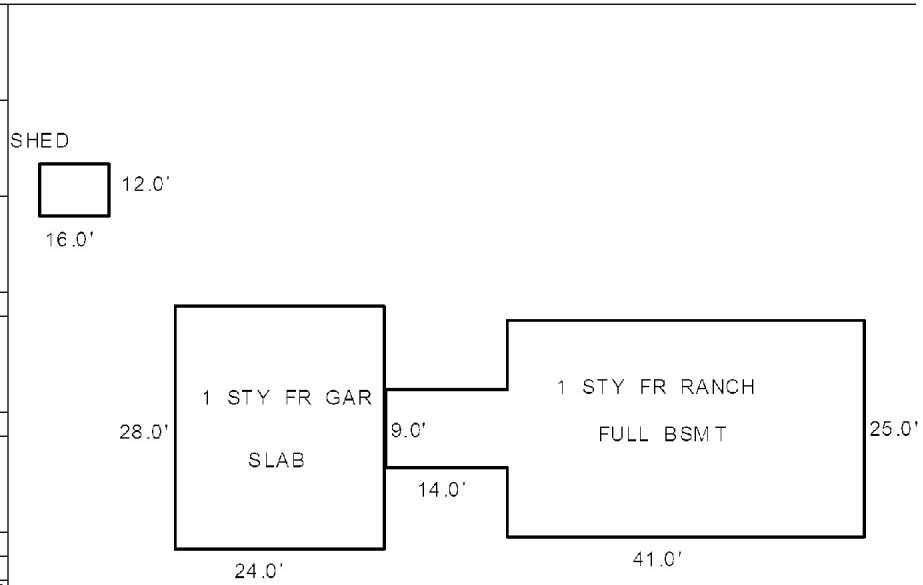


Date Inspected

## Additions, Outbuildings & Improvements

| Type | Year | Units | Grade | Cond | Phys. | Funct. | Sound Value |
|---|---|---|---|---|---|---|---|
| 81 1 SF GARAGE | 0 | 672 | 0 0 | 0 | 0 % | 0 % | |
| 24 Frame Shed | 2016 | 192 | 5 100 | 4 | 0 % | 100 % | |
| | | | | | % | % | |
| | | | | | % | % | |
| | | | | | % | % | |
| | | | | | % | % | |
| | | | | | % | % | |
| | | | | | % | % | |
| | | | | | % | % | |
| | | | | | % | % | |

1.One Story Fram
2.Two Story Fram
3.Three Story Fr
4.1 & 1/2 Story
5.1 & 3/4 Story
6.2 & 1/2 Story
21.Open Frame Por
22.Encl Frame Por
23.Frame Garage
24.Frame Shed
25.Frame Bay Wind
26.1SFr Overhang
27.Unfin Basement
28.Unfinished Att
29.Finished Attic

Map Lot 111-019 Account 622 Location 27 JELLISON COVE ROAD Card 1 Of 1 10/01/2020

DEMASO, JOHN M
DEMASO, JANE GARLAND
26 JELLISON COVE ROAD
HANCOCK ME 04640

B2803P127

## Property Data

Neighborhood **21 Neighborhood 21**

Tree Growth Year **0**

TREE GROWTH RECERTIFY **0**

STATE SALE CODE **0**

Zone/Land Use **11 Residential**

Secondary Zone

Topography **9** **9**

1.Level 4.Below St 7.
2.Rolling 5.Low 8.
3.Above St 6.Swampy 9.

Utilities **9 None** **9 None**

1.Public 4.Dr Well 7.Cesspool
2.Water 5.Dug Well 8.
3.Sewer 6.Septic 9.None

Street **9 None**

1.Paved 4.Proposed 7.
2.Semi Imp 5. 8.
3.Gravel 6. 9.None

REVIEW STRUCTURE YEAR **2008**

RENTAL? 0=NO 1=YES **1**

## Sale Data

Sale Date

Price

Sale Type

1.Land 4.Mobile 7.
2.L & B 5.Other 8.
3.Building 6. 9.

Financing

1.Convent 4.Seller 7.
2.FHA/VA 5.Private 8.
3.Assumed 6.Cash 9.Unknown

Validity

1.Valid 4.Split 7.Changes
2.Related 5.Partial 8.Other
3.Distress 6.Exempt 9.Fr Ffclse

Verified

1.Buyer 4.Agent 7.Family
2.Seller 5.Pub Rec 8.Other
3.Lender 6.MLS 9.

## Assessment Record

| Year | Land | Buildings | Exempt | Total |
|---|---|---|---|---|
| 2007 | 90,000 | 27,200 | 0 | 117,200 |
| 2008 | 104,000 | 27,400 | 0 | 131,400 |
| 2009 | 104,000 | 27,400 | 0 | 131,400 |
| 2010 | 104,000 | 27,400 | 0 | 131,400 |
| 2011 | 104,000 | 27,400 | 0 | 131,400 |
| 2012 | 104,000 | 27,400 | 0 | 131,400 |
| 2013 | 104,000 | 27,400 | 0 | 131,400 |
| 2014 | 104,000 | 27,400 | 0 | 131,400 |
| 2015 | 104,000 | 27,400 | 0 | 131,400 |
| 2016 | 104,000 | 27,400 | 0 | 131,400 |
| 2017 | 104,000 | 27,400 | 0 | 131,400 |
| 2018 | 104,000 | 27,400 | 0 | 131,400 |
| 2019 | 104,000 | 27,400 | 0 | 131,400 |
| 2020 | 104,000 | 27,400 | 0 | 131,400 |

## Land Data

| Front Foot | Type | Effective Frontage | Effective Depth | Influence Factor | Influence Code |
|---|---|---|---|---|---|
| 11.Regular Lot | | | | % | |
| 12.Delta Triangle | | | | % | |
| 13.Nabla Triangle | | | | % | |
| 14.Rear Land | | | | % | |
| 15.Miscellaneous | | | | % | |
| | | | | % | |
| | | | | % | |
| **Square Foot** | | **Square Feet** | | | |
| 16.Regular Lot | | | | % | |
| 17.Secondary Lot | | | | % | |
| 18.Excess Land | | | | % | |
| 19.Condominium | | | | % | |
| 20.Miscellaneous | | | | % | |
| | | | | % | |
| | | | | % | |
| **Fract. Acre** | | **Acreage/Sites** | | | |
| 21.Homesite (Frac | 21 | 1.00 | 100 | % | 0 |
| 22.Baselot (Fract | 24 | 4.00 | 100 | % | 0 |
| 23.Misc (Fract) | 25 | 11.00 | 100 | % | 0 |
| **Acres** | 40 | 3.80 | 100 | % | 0 |
| 24.Excess Acres 1 | 44 | 1.00 | 100 | % | 0 |
| 25.Excess Acres 5 | | | | % | |
| 26.Excess Acres 2 | | | | % | |
| 27.Excess Acres 5 | | | | | |
| 28.Excess Acres 1 | | | | | |
| 29.Excess acres | | | | | |

**Total Acreage** 19.80

### Influence Codes

1.Unimproved
2.Excess Frtg
3.Topography
4.Size/Shape
5.Access
6.Restriction
7.Corner Infl
8.Environment
9.Fract Share
**Acres**
30.Industrial Sit
31.Working Waterf
32.Cultivated Cro
33.Pasture
34.Softwood (Farm
35.Mixed Wood (Fa
36.Hardwood (Farm
37.Softwood
38.Mixed Wood
39.Hardwood
40.Wasteland
41.Gravel Pit
42.Mobile Home Si
43.Location Base
44.Lot Improvemen
45.Waterfront A
46.Lobster Pound

Inspection Witnessed By:

X Date

| No./Date | Description | Date Insp. |
|---|---|---|
| | | |
| | | |
| | | |

Notes:

**Hancock 2020**

# Hancock 2020

Map Lot 111-019 | Account 622 | Location 27 JELLISON COVE ROAD | Card 1 Of 1 | 10/01/2020

| Building Style | | |
|---|---|---|
| 0.Uncoded | 4.Cape | 8.Log |
| 1.Conv. | 5.Garrison | 9.Other |
| 2.Ranch | 6.Colonial | 10.Dutch C |
| 3.R Ranch | 7.Contemp | 11.Farmhou |

Dwelling Units

Other Units

| Stories | | |
|---|---|---|
| 1.1 | 4.1.5 | 7.3.5 |
| 2.2 | 5.1.75 | 8. |
| 3.3 | 6.2.5 | 9. |

| Exterior Walls | | |
|---|---|---|
| 0.Uncoded | 4.Asbestos | 8.Stone |
| 1.Wood | 5.Stucco | 9.Other |
| 2.Vin/Al | 6.Brick Ve | 10.Concret |
| 3.Compos. | 7.Solid Br | 12. |

| Roof Surface | | |
|---|---|---|
| 1.Asphalt | 4.Composit | 7. |
| 2.Slate | 5.Wood | 8. |
| 3.Metal | 6.Other | 9. |

SF Masonry Trim

OPEN-3-CUSTOM

OPEN-4-CUSTOM

Year Built

Year Remodeled

| Foundation | | |
|---|---|---|
| 1.Concrete | 4.Wood | 7. |
| 2.C Block | 5.Slab | 8. |
| 3.Br/Stone | 6.Piers | 9. |

| Basement | | |
|---|---|---|
| 1.1/4 Bmt | 4.Full Bmt | 7. |
| 2.1/2 Bmt | 5.None | 8. |
| 3.3/4 Bmt | 6. | 9.None |

Bsmt Gar # Cars

| Wet Basement | | |
|---|---|---|
| 1.Dry | 4. | 7. |
| 2.Damp | 5. | 8. |
| 3.Wet | 6. | 9. |

SF Bsmt Living

Fin Bsmt Grade

OPEN-5-CUSTOMIZE

| Heat Type **100%** | | |
|---|---|---|
| 0.Uncoded | 4.Steam | 8.Fl/Wall |
| 1.HWBB | 5.FWA | 9.No Heat |
| 2.HWCI | 6.GravWA | 10.Radiabt |
| 3.H Pump | 7.Electric | 12. |

| Cool Type **100%** | | |
|---|---|---|
| 1.Refrig | 4.W&C Air | 7. |
| 2.Evapor | 5. | 8. |
| 3.H Pump | 6. | 9.None |

| Kitchen Style | | |
|---|---|---|
| 1.Modern | 4.Obsolete | 7. |
| 2.Typical | 5. | 8. |
| 3.Old Type | 6. | 9.None |

| Bath(s) Style | | |
|---|---|---|
| 1.Modern | 4.Obsolete | 7. |
| 2.Typical | 5. | 8. |
| 3.Old Type | 6. | 9.None |

# Rooms

# Bedrooms

# Full Baths

# Half Baths

# Addn Fixtures

# Fireplaces

TRIO Software
A Division of Harris Computer Systems

| Layout | | |
|---|---|---|
| 1.Typical | 4. | 7. |
| 2.Inadeq | 5. | 8. |
| 3.Horrid | 6. | 9. |

| Attic | | |
|---|---|---|
| 1.1/4 Fin | 4.Full Fin | 7. |
| 2.1/2 Fin | 5.Fl/Stair | 8. |
| 3.3/4 Fin | 6. | 9.None |

| Insulation | | |
|---|---|---|
| 1.Full | 4.Minimal | 7. |
| 2.Heavy | 5.Partial | 8. |
| 3.Capped | 6. | 9.None |

Unfinished %

| Grade & Factor | | |
|---|---|---|
| 1.E Grade | 4.B Grade | 7.AAA Grad |
| 2.D Grade | 5.A Grade | 8.SC Grade |
| 3.C Grade | 6.AA Grade | 9.Same |

SQFT (Footprint)

| Condition | | |
|---|---|---|
| 1.Poor | 4.Avg | 7.V G |
| 2.Fair | 5.Avg+ | 8.Exc |
| 3.Avg- | 6.Good | 9.Same |

Phys. % Good

Funct. % Good

| Functional Code | | |
|---|---|---|
| 1.Incomp | 4.Delap | 7.Seasonal |
| 2.O-Built | 5.Bsmt | 8. |
| 3.Fire | 6.2014 ADJ | 9.None |

Econ. % Good

| Economic Code | | |
|---|---|---|
| 0.None | 3.No Power | 7. |
| 1.Location | 4.Generate | 8. |
| 2.Encroach | 9.None | 9. |

| Entrance Code **0** | | |
|---|---|---|
| 1.Interior | 4.Vacant | 7. |
| 2.Refusal | 5.Estimate | 8. |
| 3.Informed | 6. | 9. |

| Information Code **0** | | |
|---|---|---|
| 1.Owner | 4.Agent | 7. |
| 2.Relative | 5.Estimate | 8. |
| 3.Tenant | 6.Other | 9. |

Date Inspected

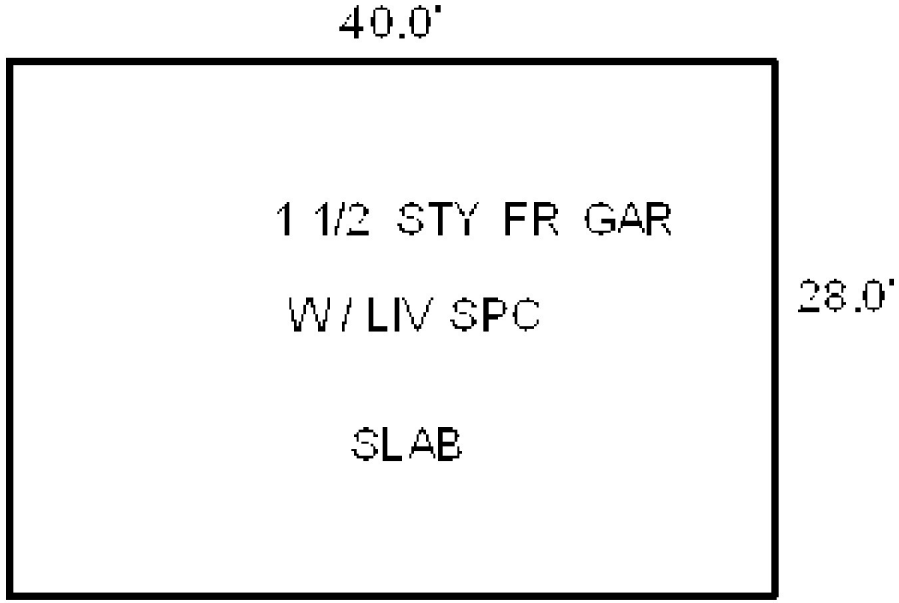

## Additions, Outbuildings & Improvements

| Type | Year | Units | Grade | Cond | Phys. | Funct. | Sound Value |
|---|---|---|---|---|---|---|---|
| 86 1 1/2 STY FR | 2001 | 1120 | 3 100 | 4 | 0 % | 50 % | |
| | | | | | % | % | |
| | | | | | % | % | |
| | | | | | % | % | |
| | | | | | % | % | |
| | | | | | % | % | |
| | | | | | % | % | |
| | | | | | % | % | |
| | | | | | % | % | |
| | | | | | % | % | |

1.One Story Fram
2.Two Story Fram
3.Three Story Fr
4.1 & 1/2 Story
5.1 & 3/4 Story
6.2 & 1/2 Story
21.Open Frame Por
22.Encl Frame Por
23.Frame Garage
24.Frame Shed
25.Frame Bay Wind
26.1SFr Overhang
27.Unfin Basement
28.Unfinished Att
29.Finished Attic

Map Lot 111-020 Account 2054 Location EASTSIDE ROAD Card 1 Of 1 10/01/2020

FOPEANO, MARILEE W
FOPEANO, PAUL H
80 JELLISON COVE RD
HANCOCK ME 04640

B4479P193 B4577P265

Previous Owner
PATRICK, WILLIAM
359 UPPER MOUNTAIN ROAD

MONTCLAIN NJ 07043
Sale Date: 8/29/2006

Inspection Witnessed By:

X Date

| No./Date | Description | Date Insp. |
|---|---|---|
| | | |
| | | |
| | | |

Notes:

## Property Data

| | |
|---|---|
| Neighborhood | **20 Neighborhood 20** |
| Tree Growth Year | **0** |
| TREE GROWTH RECERTIFY | **0** |
| STATE SALE CODE | **0** |
| Zone/Land Use | **11 Residential** |
| Secondary Zone | |

Topography

| | | |
|---|---|---|
| 1.Level | 4.Below St | 7. |
| 2.Rolling | 5.Low | 8. |
| 3.Above St | 6.Swampy | 9. |

Utilities

| | | |
|---|---|---|
| 1.Public | 4.Dr Well | 7.Cesspool |
| 2.Water | 5.Dug Well | 8. |
| 3.Sewer | 6.Septic | 9.None |

Street

| | | |
|---|---|---|
| 1.Paved | 4.Proposed | 7. |
| 2.Semi Imp | 5. | 8. |
| 3.Gravel | 6. | 9.None |

| | |
|---|---|
| REVIEW STRUCTURE YEAR | **0** |
| RENTAL? 0=NO 1=YES | **0** |

## Sale Data

| | |
|---|---|
| Sale Date | **8/29/2006** |
| Price | **45,000** |
| Sale Type | **1 Land Only** |

| | | |
|---|---|---|
| 1.Land | 4.Mobile | 7. |
| 2.L & B | 5.Other | 8. |
| 3.Building | 6. | 9. |

| | |
|---|---|
| Financing | **9 Unknown** |

| | | |
|---|---|---|
| 1.Convent | 4.Seller | 7. |
| 2.FHA/VA | 5.Private | 8. |
| 3.Assumed | 6.Cash | 9.Unknown |

| | |
|---|---|
| Validity | **1 Arms Length Sale** |

| | | |
|---|---|---|
| 1.Valid | 4.Split | 7.Changes |
| 2.Related | 5.Partial | 8.Other |
| 3.Distress | 6.Exempt | 9.Fr Ffclse |

| | |
|---|---|
| Verified | **5 Public Record** |

| | | |
|---|---|---|
| 1.Buyer | 4.Agent | 7.Family |
| 2.Seller | 5.Pub Rec | 8.Other |
| 3.Lender | 6.MLS | 9. |

## Assessment Record

| Year | Land | Buildings | Exempt | Total |
|---|---|---|---|---|
| 2007 | 41,200 | 0 | 13,000 | 28,200 |
| 2008 | 41,200 | 0 | 0 | 41,200 |
| 2009 | 41,200 | 0 | 0 | 41,200 |
| 2010 | 41,200 | 0 | 0 | 41,200 |
| 2011 | 41,200 | 0 | 0 | 41,200 |
| 2012 | 41,200 | 0 | 0 | 41,200 |
| 2013 | 41,200 | 0 | 0 | 41,200 |
| 2014 | 41,200 | 0 | 0 | 41,200 |
| 2015 | 41,200 | 0 | 0 | 41,200 |
| 2016 | 41,200 | 0 | 0 | 41,200 |
| 2017 | 41,200 | 0 | 0 | 41,200 |
| 2018 | 41,200 | 0 | 0 | 41,200 |
| 2019 | 41,200 | 0 | 0 | 41,200 |
| 2020 | 41,200 | 0 | 0 | 41,200 |

## Land Data

| Front Foot | Type | Effective Frontage | Effective Depth | Influence Factor | Influence Code |
|---|---|---|---|---|---|
| 11.Regular Lot | | | | % | |
| 12.Delta Triangle | | | | % | |
| 13.Nabla Triangle | | | | % | |
| 14.Rear Land | | | | % | |
| 15.Miscellaneous | | | | % | |
| | | | | % | |
| | | | | % | |
| **Square Foot** | | **Square Feet** | | | |
| 16.Regular Lot | | | | % | |
| 17.Secondary Lot | | | | % | |
| 18.Excess Land | | | | % | |
| 19.Condominium | | | | % | |
| 20.Miscellaneous | | | | % | |
| | | | | % | |
| | | | | % | |
| **Fract. Acre** | | **Acreage/Sites** | | | |
| 21.Homesite (Frac | 21 | 1.00 | 100 | % | 0 |
| 22.Baselot (Fract | 24 | 1.00 | 100 | % | 0 |
| 23.Misc (Fract) | | | | % | |
| **Acres** | | | | % | |
| 24.Excess Acres 1 | | | | % | |
| 25.Excess Acres 5 | | | | % | |
| 26.Excess Acres 2 | | | | % | |
| 27.Excess Acres 5 | | | | % | |
| 28.Excess Acres 1 | | | | % | |
| 29.Excess acres | | | | % | |

**Total Acreage** 2.00

### Influence Codes

1.Unimproved
2.Excess Frtg
3.Topography
4.Size/Shape
5.Access
6.Restriction
7.Corner Infl
8.Environment
9.Fract Share
**Acres**
30.Industrial Sit
31.Working Waterf
32.Cultivated Cro
33.Pasture
34.Softwood (Farm
35.Mixed Wood (Fa
36.Hardwood (Farm
37.Softwood
38.Mixed Wood
39.Hardwood
40.Wasteland
41.Gravel Pit
42.Mobile Home Si
43.Location Base
44.Lot Improvemen
45.Waterfront A
46.Lobster Pound

**Hancock 2020**

# Hancock 2020

Map Lot 111-020 | Account 2054 | Location EASTSIDE ROAD | Card 1 Of 1 | 10/01/2020

| Building Style | | |
|---|---|---|
| 0.Uncoded | 4.Cape | 8.Log |
| 1.Conv. | 5.Garrison | 9.Other |
| 2.Ranch | 6.Colonial | 10.Dutch C |
| 3.R Ranch | 7.Contemp | 11.Farmhou |

| Dwelling Units |
|---|
| Other Units |

| Stories | | |
|---|---|---|
| 1.1 | 4.1.5 | 7.3.5 |
| 2.2 | 5.1.75 | 8. |
| 3.3 | 6.2.5 | 9. |

| Exterior Walls | | |
|---|---|---|
| 0.Uncoded | 4.Asbestos | 8.Stone |
| 1.Wood | 5.Stucco | 9.Other |
| 2.Vin/Al | 6.Brick Ve | 10.Concret |
| 3.Compos. | 7.Solid Br | 12. |

| Roof Surface | | |
|---|---|---|
| 1.Asphalt | 4.Composit | 7. |
| 2.Slate | 5.Wood | 8. |
| 3.Metal | 6.Other | 9. |

| SF Masonry Trim |
|---|
| OPEN-3-CUSTOM |
| OPEN-4-CUSTOM |
| Year Built |
| Year Remodeled |

| Foundation | | |
|---|---|---|
| 1.Concrete | 4.Wood | 7. |
| 2.C Block | 5.Slab | 8. |
| 3.Br/Stone | 6.Piers | 9. |

| Basement | | |
|---|---|---|
| 1.1/4 Bmt | 4.Full Bmt | 7. |
| 2.1/2 Bmt | 5.None | 8. |
| 3.3/4 Bmt | 6. | 9.None |

| Bsmt Gar # Cars |
|---|

| Wet Basement | | |
|---|---|---|
| 1.Dry | 4. | 7. |
| 2.Damp | 5. | 8. |
| 3.Wet | 6. | 9. |

| SF Bsmt Living |
|---|
| Fin Bsmt Grade |
| OPEN-5-CUSTOMIZE |

| Heat Type **100%** | | |
|---|---|---|
| 0.Uncoded | 4.Steam | 8.Fl/Wall |
| 1.HWBB | 5.FWA | 9.No Heat |
| 2.HWCI | 6.GravWA | 10.Radiabt |
| 3.H Pump | 7.Electric | 12. |

| Cool Type **100%** | | |
|---|---|---|
| 1.Refrig | 4.W&C Air | 7. |
| 2.Evapor | 5. | 8. |
| 3.H Pump | 6. | 9.None |

| Kitchen Style | | |
|---|---|---|
| 1.Modern | 4.Obsolete | 7. |
| 2.Typical | 5. | 8. |
| 3.Old Type | 6. | 9.None |

| Bath(s) Style | | |
|---|---|---|
| 1.Modern | 4.Obsolete | 7. |
| 2.Typical | 5. | 8. |
| 3.Old Type | 6. | 9.None |

| # Rooms |
|---|
| # Bedrooms |
| # Full Baths |
| # Half Baths |
| # Addn Fixtures |
| # Fireplaces |

TRIO Software
A Division of Harris Computer Systems

| Layout | | |
|---|---|---|
| 1.Typical | 4. | 7. |
| 2.Inadeq | 5. | 8. |
| 3.Horrid | 6. | 9. |

| Attic | | |
|---|---|---|
| 1.1/4 Fin | 4.Full Fin | 7. |
| 2.1/2 Fin | 5.Fl/Stair | 8. |
| 3.3/4 Fin | 6. | 9.None |

| Insulation | | |
|---|---|---|
| 1.Full | 4.Minimal | 7. |
| 2.Heavy | 5.Partial | 8. |
| 3.Capped | 6. | 9.None |

| Unfinished % |
|---|

| Grade & Factor | | |
|---|---|---|
| 1.E Grade | 4.B Grade | 7.AAA Grad |
| 2.D Grade | 5.A Grade | 8.SC Grade |
| 3.C Grade | 6.AA Grade | 9.Same |

| SQFT (Footprint) |
|---|

| Condition | | |
|---|---|---|
| 1.Poor | 4.Avg | 7.V G |
| 2.Fair | 5.Avg+ | 8.Exc |
| 3.Avg- | 6.Good | 9.Same |

| Phys. % Good |
|---|
| Funct. % Good |

| Functional Code | | |
|---|---|---|
| 1.Incomp | 4.Delap | 7.Seasonal |
| 2.O-Built | 5.Bsmt | 8. |
| 3.Fire | 6.2014 ADJ | 9.None |

| Econ. % Good |
|---|

| Economic Code | | |
|---|---|---|
| 0.None | 3.No Power | 7. |
| 1.Location | 4.Generate | 8. |
| 2.Encroach | 9.None | 9. |

| Entrance Code **0** | | |
|---|---|---|
| 1.Interior | 4.Vacant | 7. |
| 2.Refusal | 5.Estimate | 8. |
| 3.Informed | 6. | 9. |

| Information Code **0** | | |
|---|---|---|
| 1.Owner | 4.Agent | 7. |
| 2.Relative | 5.Estimate | 8. |
| 3.Tenant | 6.Other | 9. |

Date Inspected

## Additions, Outbuildings & Improvements

| Type | Year | Units | Grade | Cond | Phys. | Funct. | Sound Value |
|---|---|---|---|---|---|---|---|
| | | | | | % | % | |
| | | | | | % | % | |
| | | | | | % | % | |
| | | | | | % | % | |
| | | | | | % | % | |
| | | | | | % | % | |
| | | | | | % | % | |
| | | | | | % | % | |
| | | | | | % | % | |
| | | | | | % | % | |

1.One Story Fram
2.Two Story Fram
3.Three Story Fr
4.1 & 1/2 Story
5.1 & 3/4 Story
6.2 & 1/2 Story
21.Open Frame Por
22.Encl Frame Por
23.Frame Garage
24.Frame Shed
25.Frame Bay Wind
26.1SFr Overhang
27.Unfin Basement
28.Unfinished Att
29.Finished Attic

Map Lot 111-021 Account 1463 Location 602 EASTSIDE ROAD Card 1 Of 1 10/01/2020

NICKERSON, MICHAEL
NICKERSON, SHAYNA
602 EASTSIDE ROAD
HANCOCK ME 04640

B4479P193 B5038P345 B6480P166

Previous Owner
SIDAR, THOMAS & ELLEN
602 EASTSIDE ROAD

HANCOCK ME 04640
Sale Date: 11/03/2015

Previous Owner
PATRICK, WILLIAM
202 LORRAINE AVE.

MONTCLAIR NJ 07043
Sale Date: 7/29/2008

Previous Owner
PATRICK, WILLIAM
359 UPPER MOUNTAIN ROAD

MONTCLAIR NJ 07043
Sale Date: 5/30/2007

Inspection Witnessed By:

X Date

| No./Date | Description | Date Insp. |
|---|---|---|
| | | |
| | | |
| | | |

Notes:

## Property Data

Neighborhood **10 Neighborhood 10**

Tree Growth Year **0**

TREE GROWTH RECERTIFY **0**

STATE SALE CODE **0**

Zone/Land Use **11 Residential**

Secondary Zone

Topography **1 Level**

| | | |
|---|---|---|
| 1.Level | 4.Below St | 7. |
| 2.Rolling | 5.Low | 8. |
| 3.Above St | 6.Swampy | 9. |

Utilities **4 Drilled Well** **6 Septic System**

| | | |
|---|---|---|
| 1.Public | 4.Dr Well | 7.Cesspool |
| 2.Water | 5.Dug Well | 8. |
| 3.Sewer | 6.Septic | 9.None |

Street **1 Paved**

| | | |
|---|---|---|
| 1.Paved | 4.Proposed | 7. |
| 2.Semi Imp | 5. | 8. |
| 3.Gravel | 6. | 9.None |

REVIEW STRUCTURE YEAR **0**

RENTAL? 0=NO 1=YES **0**

## Sale Data

Sale Date **11/03/2015**

Price **250,000**

Sale Type **2 Land & Buildings**

| | | |
|---|---|---|
| 1.Land | 4.Mobile | 7. |
| 2.L & B | 5.Other | 8. |
| 3.Building | 6. | 9. |

Financing **9 Unknown**

| | | |
|---|---|---|
| 1.Convent | 4.Seller | 7. |
| 2.FHA/VA | 5.Private | 8. |
| 3.Assumed | 6.Cash | 9.Unknown |

Validity **1 Arms Length Sale**

| | | |
|---|---|---|
| 1.Valid | 4.Split | 7.Changes |
| 2.Related | 5.Partial | 8.Other |
| 3.Distress | 6.Exempt | 9.Fr Ffclse |

Verified **5 Public Record**

| | | |
|---|---|---|
| 1.Buyer | 4.Agent | 7.Family |
| 2.Seller | 5.Pub Rec | 8.Other |
| 3.Lender | 6.MLS | 9. |

## Assessment Record

| Year | Land | Buildings | Exempt | Total |
|---|---|---|---|---|
| 2007 | 85,200 | 143,000 | 13,000 | 215,200 |
| 2008 | 95,100 | 143,000 | 0 | 238,100 |
| 2009 | 95,100 | 143,000 | 0 | 238,100 |
| 2010 | 95,100 | 171,300 | 0 | 266,400 |
| 2011 | 95,100 | 171,300 | 10,000 | 256,400 |
| 2012 | 95,100 | 171,300 | 10,000 | 256,400 |
| 2013 | 95,100 | 171,300 | 10,000 | 256,400 |
| 2014 | 95,100 | 171,300 | 10,800 | 255,600 |
| 2015 | 95,100 | 171,300 | 11,000 | 255,400 |
| 2016 | 95,100 | 171,300 | 0 | 266,400 |
| 2017 | 95,100 | 171,200 | 0 | 266,300 |
| 2018 | 95,100 | 171,200 | 0 | 266,300 |
| 2019 | 95,100 | 171,200 | 0 | 266,300 |
| 2020 | 95,100 | 171,200 | 0 | 266,300 |

## Land Data

| Front Foot | Type | Effective Frontage | Effective Depth | Influence Factor | Influence Code |
|---|---|---|---|---|---|
| 11.Regular Lot | | | | % | |
| 12.Delta Triangle | | | | % | |
| 13.Nabla Triangle | | | | % | |
| 14.Rear Land | | | | % | |
| 15.Miscellaneous | | | | % | |
| | | | | % | |
| | | | | % | |
| **Square Foot** | | **Square Feet** | | | |
| 16.Regular Lot | | | | % | |
| 17.Secondary Lot | | | | % | |
| 18.Excess Land | | | | % | |
| 19.Condominium | | | | % | |
| 20.Miscellaneous | | | | % | |
| | | | | % | |
| | | | | % | |
| **Fract. Acre** | | **Acreage/Sites** | | | |
| 21.Homesite (Frac | 21 | 1.00 | 100 | % | 0 |
| 22.Baselot (Fract | 24 | 4.00 | 100 | % | 0 |
| 23.Misc (Fract) | 44 | 1.00 | 100 | % | 0 |
| **Acres** | 25 | 2.81 | 100 | % | 0 |
| 24.Excess Acres 1 | | | | % | |
| 25.Excess Acres 5 | | | | % | |
| 26.Excess Acres 2 | | | | % | |
| 27.Excess Acres 5 | | | | | |
| 28.Excess Acres 1 | | | | | |
| 29.Excess acres | | | | | |

**Total Acreage** 7.81

### Influence Codes

1.Unimproved
2.Excess Frtg
3.Topography
4.Size/Shape
5.Access
6.Restriction
7.Corner Infl
8.Environment
9.Fract Share
**Acres**
30.Industrial Sit
31.Working Waterf
32.Cultivated Cro
33.Pasture
34.Softwood (Farm
35.Mixed Wood (Fa
36.Hardwood (Farm
37.Softwood
38.Mixed Wood
39.Hardwood
40.Wasteland
41.Gravel Pit
42.Mobile Home Si
43.Location Base
44.Lot Improvemen
45.Waterfront A
46.Lobster Pound

**Hancock 2020**

# Hancock 2020

Map Lot 111-021 | Account 1463 | Location 602 EASTSIDE ROAD | Card 1 Of 1 | 10/01/2020

| | | |
|---|---|---|
| Building Style | **1 Conventional** | |
| 0.Uncoded | 4.Cape | 8.Log |
| 1.Conv. | 5.Garrison | 9.Other |
| 2.Ranch | 6.Colonial | 10.Dutch C |
| 3.R Ranch | 7.Contemp | 11.Farmhou |
| Dwelling Units | **1** | |
| Other Units | **0** | |
| Stories | **5 One & 3/4 Story** | |
| 1.1 | 4.1.5 | 7.3.5 |
| 2.2 | 5.1.75 | 8. |
| 3.3 | 6.2.5 | 9. |
| Exterior Walls | **1 Wood Siding** | |
| 0.Uncoded | 4.Asbestos | 8.Stone |
| 1.Wood | 5.Stucco | 9.Other |
| 2.Vin/Al | 6.Brick Ve | 10.Concret |
| 3.Compos. | 7.Solid Br | 12. |
| Roof Surface | **1 Asphalt Shingles** | |
| 1.Asphalt | 4.Composit | 7. |
| 2.Slate | 5.Wood | 8. |
| 3.Metal | 6.Other | 9. |
| SF Masonry Trim | **0** | |
| OPEN-3-CUSTOM | **0** | |
| OPEN-4-CUSTOM | **0** | |
| Year Built | **1880** | |
| Year Remodeled | **0** | |
| Foundation | **3 Brick &/or Stone** | |
| 1.Concrete | 4.Wood | 7. |
| 2.C Block | 5.Slab | 8. |
| 3.Br/Stone | 6.Piers | 9. |
| Basement | **2 1/2 Basement** | |
| 1.1/4 Bmt | 4.Full Bmt | 7. |
| 2.1/2 Bmt | 5.None | 8. |
| 3.3/4 Bmt | 6. | 9.None |
| Bsmt Gar # Cars | **0** | |
| Wet Basement | **2 Damp Basement** | |
| 1.Dry | 4. | 7. |
| 2.Damp | 5. | 8. |
| 3.Wet | 6. | 9. |

| | | |
|---|---|---|
| SF Bsmt Living | **0** | |
| Fin Bsmt Grade | **0 0** | |
| OPEN-5-CUSTOMIZE | **0** | |
| Heat Type | **100% 5 Forced Warm Air** | |
| 0.Uncoded | 4.Steam | 8.Fl/Wall |
| 1.HWBB | 5.FWA | 9.No Heat |
| 2.HWCI | 6.GravWA | 10.Radiabt |
| 3.H Pump | 7.Electric | 12. |
| Cool Type | **100% 9 None** | |
| 1.Refrig | 4.W&C Air | 7. |
| 2.Evapor | 5. | 8. |
| 3.H Pump | 6. | 9.None |
| Kitchen Style | **2 Typical** | |
| 1.Modern | 4.Obsolete | 7. |
| 2.Typical | 5. | 8. |
| 3.Old Type | 6. | 9.None |
| Bath(s) Style | **2 Typical Bath(s)** | |
| 1.Modern | 4.Obsolete | 7. |
| 2.Typical | 5. | 8. |
| 3.Old Type | 6. | 9.None |
| # Rooms | **7** | |
| # Bedrooms | **4** | |
| # Full Baths | **2** | |
| # Half Baths | **0** | |
| # Addn Fixtures | **1** | |
| # Fireplaces | **1** | |

TRIO Software
A Division of Harris Computer Systems

| | | |
|---|---|---|
| Layout | **1 Typical** | |
| 1.Typical | 4. | 7. |
| 2.Inadeq | 5. | 8. |
| 3.Horrid | 6. | 9. |
| Attic | **9 None** | |
| 1.1/4 Fin | 4.Full Fin | 7. |
| 2.1/2 Fin | 5.Fl/Stair | 8. |
| 3.3/4 Fin | 6. | 9.None |
| Insulation | **1 Full** | |
| 1.Full | 4.Minimal | 7. |
| 2.Heavy | 5.Partial | 8. |
| 3.Capped | 6. | 9.None |
| Unfinished % | **0%** | |
| Grade & Factor | **3 Average 100%** | |
| 1.E Grade | 4.B Grade | 7.AAA Grad |
| 2.D Grade | 5.A Grade | 8.SC Grade |
| 3.C Grade | 6.AA Grade | 9.Same |
| SQFT (Footprint) | **1048** | |
| Condition | **6 Good** | |
| 1.Poor | 4.Avg | 7.V G |
| 2.Fair | 5.Avg+ | 8.Exc |
| 3.Avg- | 6.Good | 9.Same |
| Phys. % Good | **0%** | |
| Funct. % Good | **100%** | |
| Functional Code | **9 None** | |
| 1.Incomp | 4.Delap | 7.Seasonal |
| 2.O-Built | 5.Bsmt | 8. |
| 3.Fire | 6.2014 ADJ | 9.None |
| Econ. % Good | **100%** | |
| Economic Code | **None** | |
| 0.None | 3.No Power | 7. |
| 1.Location | 4.Generate | 8. |
| 2.Encroach | 9.None | 9. |
| Entrance Code | **0** | |
| 1.Interior | 4.Vacant | 7. |
| 2.Refusal | 5.Estimate | 8. |
| 3.Informed | 6. | 9. |
| Information Code | **0** | |
| 1.Owner | 4.Agent | 7. |
| 2.Relative | 5.Estimate | 8. |
| 3.Tenant | 6.Other | 9. |

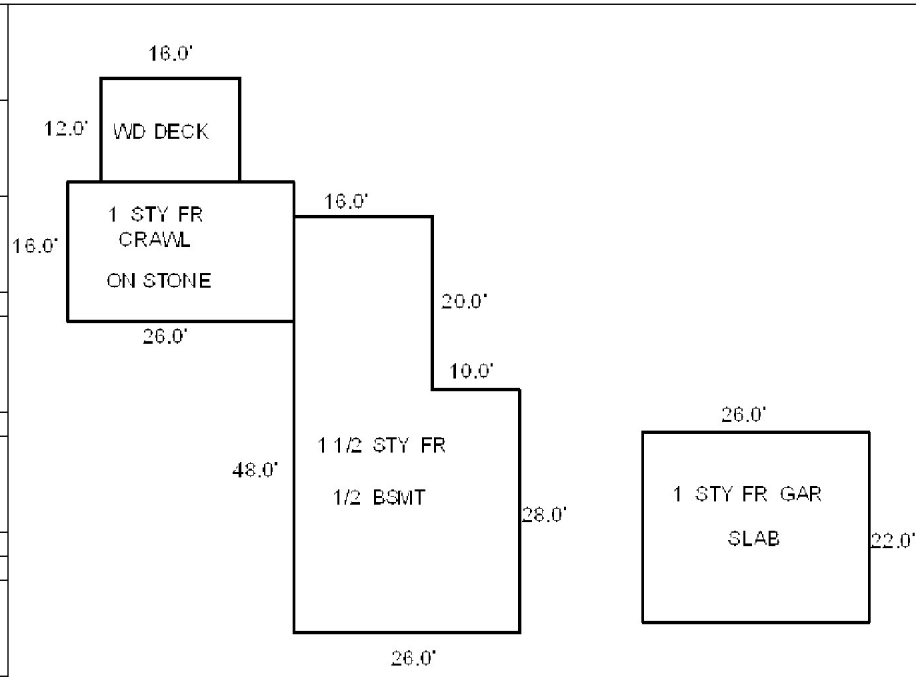

Date Inspected

## Additions, Outbuildings & Improvements

| Type | Year | Units | Grade | Cond | Phys. | Funct. | Sound Value |
|---|---|---|---|---|---|---|---|
| 1 One Story Frame | 1980 | 416 | 0 0 | 6 | 0 % | 100 % | |
| 81 1 SF GARAGE | 1983 | 572 | 0 0 | 4 | 0 % | 100 % | |
| 68 Wood Deck | 2010 | 192 | 0 0 | 4 | 0 % | 100 % | |
| | | | | | % | % | |
| | | | | | % | % | |
| | | | | | % | % | |
| | | | | | % | % | |
| | | | | | % | % | |
| | | | | | % | % | |
| | | | | | % | % | |

1.One Story Fram
2.Two Story Fram
3.Three Story Fr
4.1 & 1/2 Story
5.1 & 3/4 Story
6.2 & 1/2 Story
21.Open Frame Por
22.Encl Frame Por
23.Frame Garage
24.Frame Shed
25.Frame Bay Wind
26.1SFr Overhang
27.Unfin Basement
28.Unfinished Att
29.Finished Attic

Map Lot 111-022 Account 1849 Location 4 AGREEN WAY Card 1 Of 1 10/01/2020

FAIRBANKS, HAROLD
FAIRBANKS, ELEANOR
4 AGREEN WAY
HANCOCK ME 04640

B3244P200 B5956P26

Previous Owner
ESTEY, KENNETH
ESTEY, JOANNE
PO BOX 493
HANCOCK ME 04640
Sale Date: 12/24/2012

Inspection Witnessed By:

X Date

| No./Date | Description | Date Insp. |
|---|---|---|
| | | |
| | | |
| | | |

Notes:

## Property Data

| | |
|---|---|
| Neighborhood | **20 Neighborhood 20** |
| Tree Growth Year | **0** |
| TREE GROWTH RECERTIFY | **0** |
| STATE SALE CODE | **0** |
| Zone/Land Use | **11 Residential** |
| Secondary Zone | |

Topography

| | | |
|---|---|---|
| 1.Level | 4.Below St | 7. |
| 2.Rolling | 5.Low | 8. |
| 3.Above St | 6.Swampy | 9. |

Utilities

| | | |
|---|---|---|
| 1.Public | 4.Dr Well | 7.Cesspool |
| 2.Water | 5.Dug Well | 8. |
| 3.Sewer | 6.Septic | 9.None |

Street

| | | |
|---|---|---|
| 1.Paved | 4.Proposed | 7. |
| 2.Semi Imp | 5. | 8. |
| 3.Gravel | 6. | 9.None |

| | |
|---|---|
| REVIEW STRUCTURE YEAR | **0** |
| RENTAL? 0=NO 1=YES | **0** |

## Sale Data

| | |
|---|---|
| Sale Date | **12/24/2012** |
| Price | **301,200** |
| Sale Type | **2 Land & Buildings** |

| | | |
|---|---|---|
| 1.Land | 4.Mobile | 7. |
| 2.L & B | 5.Other | 8. |
| 3.Building | 6. | 9. |

Financing **9 Unknown**

| | | |
|---|---|---|
| 1.Convent | 4.Seller | 7. |
| 2.FHA/VA | 5.Private | 8. |
| 3.Assumed | 6.Cash | 9.Unknown |

Validity **1 Arms Length Sale**

| | | |
|---|---|---|
| 1.Valid | 4.Split | 7.Changes |
| 2.Related | 5.Partial | 8.Other |
| 3.Distress | 6.Exempt | 9.Fr Ffclse |

Verified **5 Public Record**

| | | |
|---|---|---|
| 1.Buyer | 4.Agent | 7.Family |
| 2.Seller | 5.Pub Rec | 8.Other |
| 3.Lender | 6.MLS | 9. |

## Assessment Record

| Year | Land | Buildings | Exempt | Total |
|---|---|---|---|---|
| 2007 | 40,800 | 0 | 0 | 40,800 |
| 2008 | 40,800 | 0 | 0 | 40,800 |
| 2009 | 40,800 | 0 | 0 | 40,800 |
| 2010 | 40,800 | 0 | 0 | 40,800 |
| 2011 | 40,800 | 0 | 0 | 40,800 |
| 2012 | 40,800 | 0 | 0 | 40,800 |
| 2013 | 40,800 | 231,300 | 0 | 272,100 |
| 2014 | 40,800 | 231,300 | 0 | 272,100 |
| 2015 | 40,800 | 231,300 | 0 | 272,100 |
| 2016 | 40,800 | 231,300 | 0 | 272,100 |
| 2017 | 40,800 | 231,300 | 0 | 272,100 |
| 2018 | 40,800 | 231,300 | 0 | 272,100 |
| 2019 | 40,800 | 231,300 | 0 | 272,100 |
| 2020 | 40,800 | 231,300 | 25,000 | 247,100 |

## Land Data

| Front Foot | Type | Effective Frontage | Effective Depth | Influence Factor | Influence Code |
|---|---|---|---|---|---|
| 11.Regular Lot | | | | % | |
| 12.Delta Triangle | | | | % | |
| 13.Nabla Triangle | | | | % | |
| 14.Rear Land | | | | % | |
| 15.Miscellaneous | | | | % | |
| | | | | % | |
| | | | | % | |
| **Square Foot** | | **Square Feet** | | | |
| 16.Regular Lot | | | | % | |
| 17.Secondary Lot | | | | % | |
| 18.Excess Land | | | | % | |
| 19.Condominium | | | | % | |
| 20.Miscellaneous | | | | % | |
| | | | | % | |
| | | | | % | |
| **Fract. Acre** | | **Acreage/Sites** | | | |
| 21.Homesite (Frac | 21 | 1.00 | 100 | % | 0 |
| 22.Baselot (Fract | 24 | 0.69 | 100 | % | 0 |
| 23.Misc (Fract) | | | | % | |
| **Acres** | | | | % | |
| 24.Excess Acres 1 | | | | % | |
| 25.Excess Acres 5 | | | | % | |
| 26.Excess Acres 2 | | | | % | |
| 27.Excess Acres 5 | | | | % | |
| 28.Excess Acres 1 | | | | % | |
| 29.Excess acres | | | | % | |

**Total Acreage** 1.69

### Influence Codes

1.Unimproved
2.Excess Frtg
3.Topography
4.Size/Shape
5.Access
6.Restriction
7.Corner Infl
8.Environment
9.Fract Share
**Acres**
30.Industrial Sit
31.Working Waterf
32.Cultivated Cro
33.Pasture
34.Softwood (Farm
35.Mixed Wood (Fa
36.Hardwood (Farm
37.Softwood
38.Mixed Wood
39.Hardwood
40.Wasteland
41.Gravel Pit
42.Mobile Home Si
43.Location Base
44.Lot Improvemen
45.Waterfront A
46.Lobster Pound

**Hancock 2020**

# Hancock 2020

Map Lot 111-022 | Account 1849 | Location 4 AGREEN WAY | Card 1 Of 1 | 10/01/2020

| | | | |
|---|---|---|---|
| Building Style | **1 Conventional** | | |
| 0.Uncoded | 4.Cape | 8.Log | |
| 1.Conv. | 5.Garrison | 9.Other | |
| 2.Ranch | 6.Colonial | 10.Dutch C | |
| 3.R Ranch | 7.Contemp | 11.Farmhou | |
| Dwelling Units | **1** | | |
| Other Units | **0** | | |
| Stories | **4 One & 1/2 Story** | | |
| 1.1 | 4.1.5 | 7.3.5 | |
| 2.2 | 5.1.75 | 8. | |
| 3.3 | 6.2.5 | 9. | |
| Exterior Walls | **1 Wood Siding** | | |
| 0.Uncoded | 4.Asbestos | 8.Stone | |
| 1.Wood | 5.Stucco | 9.Other | |
| 2.Vin/Al | 6.Brick Ve | 10.Concret | |
| 3.Compos. | 7.Solid Br | 12. | |
| Roof Surface | **1 Asphalt Shingles** | | |
| 1.Asphalt | 4.Composit | 7. | |
| 2.Slate | 5.Wood | 8. | |
| 3.Metal | 6.Other | 9. | |
| SF Masonry Trim | **0** | | |
| OPEN-3-CUSTOM | **0** | | |
| OPEN-4-CUSTOM | **0** | | |
| Year Built | **2103** | | |
| Year Remodeled | **0** | | |
| Foundation | **1 Concrete** | | |
| 1.Concrete | 4.Wood | 7. | |
| 2.C Block | 5.Slab | 8. | |
| 3.Br/Stone | 6.Piers | 9. | |
| Basement | **4 Full Basement** | | |
| 1.1/4 Bmt | 4.Full Bmt | 7. | |
| 2.1/2 Bmt | 5.None | 8. | |
| 3.3/4 Bmt | 6. | 9.None | |
| Bsmt Gar # Cars | **0** | | |
| Wet Basement | **1 Dry Basement** | | |
| 1.Dry | 4. | 7. | |
| 2.Damp | 5. | 8. | |
| 3.Wet | 6. | 9. | |

| | | | |
|---|---|---|---|
| SF Bsmt Living | **0** | | |
| Fin Bsmt Grade | **0 0** | | |
| OPEN-5-CUSTOMIZE | **0** | | |
| Heat Type | **100%** | **1 Hot Water BB** | |
| 0.Uncoded | 4.Steam | 8.Fl/Wall | |
| 1.HWBB | 5.FWA | 9.No Heat | |
| 2.HWCI | 6.GravWA | 10.Radiabt | |
| 3.H Pump | 7.Electric | 12. | |
| Cool Type | **100%** | **9 None** | |
| 1.Refrig | 4.W&C Air | 7. | |
| 2.Evapor | 5. | 8. | |
| 3.H Pump | 6. | 9.None | |
| Kitchen Style | **2 Typical** | | |
| 1.Modern | 4.Obsolete | 7. | |
| 2.Typical | 5. | 8. | |
| 3.Old Type | 6. | 9.None | |
| Bath(s) Style | **2 Typical Bath(s)** | | |
| 1.Modern | 4.Obsolete | 7. | |
| 2.Typical | 5. | 8. | |
| 3.Old Type | 6. | 9.None | |
| # Rooms | **6** | | |
| # Bedrooms | **3** | | |
| # Full Baths | **2** | | |
| # Half Baths | **1** | | |
| # Addn Fixtures | **0** | | |
| # Fireplaces | **0** | | |

TRIO Software
A Division of Harris Computer Systems

| | | | |
|---|---|---|---|
| Layout | **1 Typical** | | |
| 1.Typical | 4. | 7. | |
| 2.Inadeq | 5. | 8. | |
| 3.Horrid | 6. | 9. | |
| Attic | **9 None** | | |
| 1.1/4 Fin | 4.Full Fin | 7. | |
| 2.1/2 Fin | 5.Fl/Stair | 8. | |
| 3.3/4 Fin | 6. | 9.None | |
| Insulation | **1 Full** | | |
| 1.Full | 4.Minimal | 7. | |
| 2.Heavy | 5.Partial | 8. | |
| 3.Capped | 6. | 9.None | |
| Unfinished % | **0%** | | |
| Grade & Factor | **3 Average 110%** | | |
| 1.E Grade | 4.B Grade | 7.AAA Grad | |
| 2.D Grade | 5.A Grade | 8.SC Grade | |
| 3.C Grade | 6.AA Grade | 9.Same | |
| SQFT (Footprint) | **1204** | | |
| Condition | **4 Average** | | |
| 1.Poor | 4.Avg | 7.V G | |
| 2.Fair | 5.Avg+ | 8.Exc | |
| 3.Avg- | 6.Good | 9.Same | |
| Phys. % Good | **0%** | | |
| Funct. % Good | **100%** | | |
| Functional Code | **9 None** | | |
| 1.Incomp | 4.Delap | 7.Seasonal | |
| 2.O-Built | 5.Bsmt | 8. | |
| 3.Fire | 6.2014 ADJ | 9.None | |
| Econ. % Good | **100%** | | |
| Economic Code | **None** | | |
| 0.None | 3.No Power | 7. | |
| 1.Location | 4.Generate | 8. | |
| 2.Encroach | 9.None | 9. | |
| Entrance Code | **0** | | |
| 1.Interior | 4.Vacant | 7. | |
| 2.Refusal | 5.Estimate | 8. | |
| 3.Informed | 6. | 9. | |
| Information Code | **0** | | |
| 1.Owner | 4.Agent | 7. | |
| 2.Relative | 5.Estimate | 8. | |
| 3.Tenant | 6.Other | 9. | |

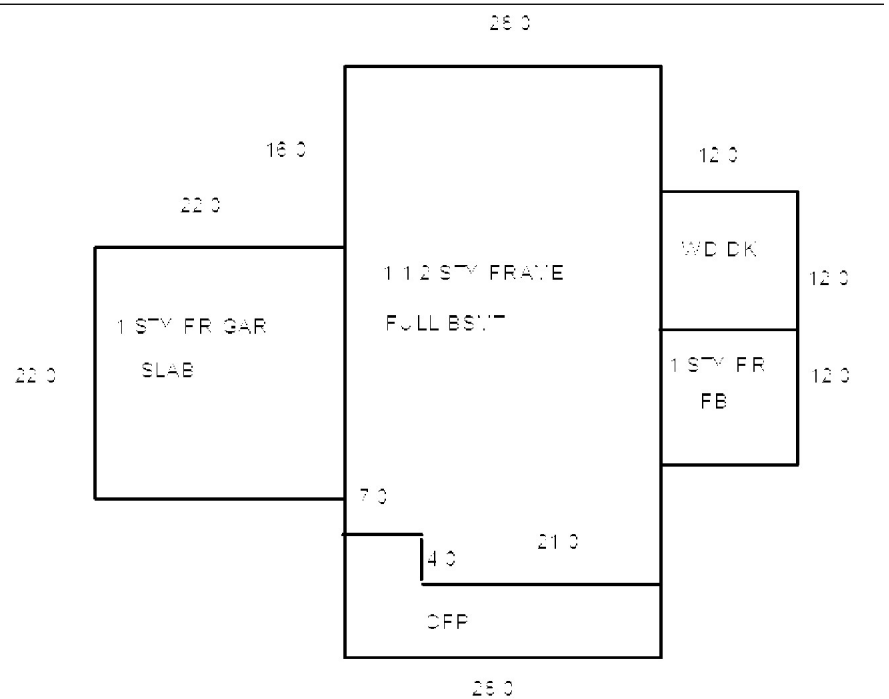

Date Inspected

## Additions, Outbuildings & Improvements

| Type | Year | Units | Grade | Cond | Phys. | Funct. | Sound Value |
|---|---|---|---|---|---|---|---|
| 1 One Story Frame | 0 | 144 | 0 0 | 0 | 0 % | 0 % | |
| 27 Unfin Basement | 0 | 144 | 0 0 | 0 | 0 % | 0 % | |
| 23 Frame Garage | 0 | 484 | 0 0 | 0 | 0 % | 0 % | |
| 21 Open Frame | 0 | 140 | 0 0 | 0 | 0 % | 0 % | |
| | | | | | % | % | |
| | | | | | % | % | |
| | | | | | % | % | |
| | | | | | % | % | |
| | | | | | % | % | |
| | | | | | % | % | |

1.One Story Fram
2.Two Story Fram
3.Three Story Fr
4.1 & 1/2 Story
5.1 & 3/4 Story
6.2 & 1/2 Story
21.Open Frame Por
22.Encl Frame Por
23.Frame Garage
24.Frame Shed
25.Frame Bay Wind
26.1SFr Overhang
27.Unfin Basement
28.Unfinished Att
29.Finished Attic

Map Lot 111-023 Account 1846 Location 15 AGREEN WAY Card 1 Of 1 10/01/2020

BURNETT, PETER W
BURNETT, JANET R
PO BOX 359
HANCOCK ME 04640

B4130P274 B6552P316 B6922P937

Previous Owner
CARR, CECILLY P (TIC)
CARR, MARILYN J. (TIC)

HANCOCK ME 04640
Sale Date: 11/16/2018

Previous Owner
CARR, F. BENJAMIN
CARR, MARILYN J.

HANCOCK ME 04640
Sale Date: 4/16/2016

Previous Owner
ESTEY, KENNETH B.
ESTY, JOANNE M.
7 STEARNS ROAD
AMHERST NH 03031
Sale Date: 2/10/2005

Inspection Witnessed By:

X Date

| No./Date | Description | Date Insp. |
|---|---|---|
| | | |
| | | |
| | | |

Notes:

## Property Data

Neighborhood **20 Neighborhood 20**

Tree Growth Year **0**

TREE GROWTH RECERTIFY **0**

STATE SALE CODE **0**

Zone/Land Use **11 Residential**

Secondary Zone

Topography

| | | |
|---|---|---|
| 1.Level | 4.Below St | 7. |
| 2.Rolling | 5.Low | 8. |
| 3.Above St | 6.Swampy | 9. |

Utilities

| | | |
|---|---|---|
| 1.Public | 4.Dr Well | 7.Cesspool |
| 2.Water | 5.Dug Well | 8. |
| 3.Sewer | 6.Septic | 9.None |

Street **1 Paved**

| | | |
|---|---|---|
| 1.Paved | 4.Proposed | 7. |
| 2.Semi Imp | 5. | 8. |
| 3.Gravel | 6. | 9.None |

REVIEW STRUCTURE YEAR **0**

RENTAL? 0=NO 1=YES **0**

## Sale Data

Sale Date **11/16/2018**

Price **315,000**

Sale Type **2 Land & Buildings**

| | | |
|---|---|---|
| 1.Land | 4.Mobile | 7. |
| 2.L & B | 5.Other | 8. |
| 3.Building | 6. | 9. |

Financing **9 Unknown**

| | | |
|---|---|---|
| 1.Convent | 4.Seller | 7. |
| 2.FHA/VA | 5.Private | 8. |
| 3.Assumed | 6.Cash | 9.Unknown |

Validity **1 Arms Length Sale**

| | | |
|---|---|---|
| 1.Valid | 4.Split | 7.Changes |
| 2.Related | 5.Partial | 8.Other |
| 3.Distress | 6.Exempt | 9.Fr Ffclse |

Verified **5 Public Record**

| | | |
|---|---|---|
| 1.Buyer | 4.Agent | 7.Family |
| 2.Seller | 5.Pub Rec | 8.Other |
| 3.Lender | 6.MLS | 9. |

## Assessment Record

| Year | Land | Buildings | Exempt | Total |
|---|---|---|---|---|
| 2007 | 53,900 | 245,800 | 0 | 299,700 |
| 2008 | 53,900 | 259,700 | 13,000 | 300,600 |
| 2009 | 53,900 | 259,700 | 13,000 | 300,600 |
| 2010 | 53,900 | 259,700 | 10,000 | 303,600 |
| 2011 | 53,900 | 259,700 | 10,000 | 303,600 |
| 2012 | 53,900 | 259,700 | 10,000 | 303,600 |
| 2013 | 53,900 | 259,700 | 10,000 | 303,600 |
| 2014 | 53,900 | 259,700 | 10,800 | 302,800 |
| 2015 | 53,900 | 259,700 | 11,000 | 302,600 |
| 2016 | 53,900 | 259,700 | 16,500 | 297,100 |
| 2017 | 53,900 | 259,700 | 22,000 | 291,600 |
| 2018 | 53,900 | 259,700 | 22,000 | 291,600 |
| 2019 | 53,900 | 259,700 | 22,000 | 291,600 |
| 2020 | 53,900 | 259,700 | 25,000 | 288,600 |

## Land Data

| Front Foot | Type | Effective Frontage | Effective Depth | Influence Factor | Influence Code |
|---|---|---|---|---|---|
| 11.Regular Lot | | | | % | |
| 12.Delta Triangle | | | | % | |
| 13.Nabla Triangle | | | | % | |
| 14.Rear Land | | | | % | |
| 15.Miscellaneous | | | | % | |
| | | | | % | |
| | | | | % | |
| **Square Foot** | | **Square Feet** | | | |
| 16.Regular Lot | | | | % | |
| 17.Secondary Lot | | | | % | |
| 18.Excess Land | | | | % | |
| 19.Condominium | | | | % | |
| 20.Miscellaneous | | | | % | |
| | | | | % | |
| | | | | % | |
| **Fract. Acre** | | **Acreage/Sites** | | | |
| 21.Homesite (Frac | 21 | 1.00 | | 100 % | 0 |
| 22.Baselot (Fract | 24 | 0.79 | | 100 % | 0 |
| 23.Misc (Fract) | 44 | 1.00 | | 100 % | 0 |
| **Acres** | | | | % | |
| 24.Excess Acres 1 | | | | % | |
| 25.Excess Acres 5 | | | | % | |
| 26.Excess Acres 2 | | | | % | |
| 27.Excess Acres 5 | | | | % | |
| 28.Excess Acres 1 | | | | % | |
| 29.Excess acres | | | | % | |

**Total Acreage** 1.79

### Influence Codes

1.Unimproved
2.Excess Frtg
3.Topography
4.Size/Shape
5.Access
6.Restriction
7.Corner Infl
8.Environment
9.Fract Share
**Acres**
30.Industrial Sit
31.Working Waterf
32.Cultivated Cro
33.Pasture
34.Softwood (Farm
35.Mixed Wood (Fa
36.Hardwood (Farm
37.Softwood
38.Mixed Wood
39.Hardwood
40.Wasteland
41.Gravel Pit
42.Mobile Home Si
43.Location Base
44.Lot Improvemen
45.Waterfront A
46.Lobster Pound

**Hancock 2020**

# Hancock 2020

Map Lot 111-023 | Account 1846 | Location 15 AGREEN WAY | Card 1 Of 1 | 10/01/2020

| | | | |
|---|---|---|---|
| Building Style | **5 Garrison** | | |
| 0.Uncoded | 4.Cape | 8.Log | |
| 1.Conv. | 5.Garrison | 9.Other | |
| 2.Ranch | 6.Colonial | 10.Dutch C | |
| 3.R Ranch | 7.Contemp | 11.Farmhou | |
| Dwelling Units | **1** | | |
| Other Units | **0** | | |
| Stories | **5 One & 3/4 Story** | | |
| 1.1 | 4.1.5 | 7.3.5 | |
| 2.2 | 5.1.75 | 8. | |
| 3.3 | 6.2.5 | 9. | |
| Exterior Walls | **1 Wood Siding** | | |
| 0.Uncoded | 4.Asbestos | 8.Stone | |
| 1.Wood | 5.Stucco | 9.Other | |
| 2.Vin/Al | 6.Brick Ve | 10.Concret | |
| 3.Compos. | 7.Solid Br | 12. | |
| Roof Surface | **1 Asphalt Shingles** | | |
| 1.Asphalt | 4.Composit | 7. | |
| 2.Slate | 5.Wood | 8. | |
| 3.Metal | 6.Other | 9. | |
| SF Masonry Trim | **0** | | |
| OPEN-3-CUSTOM | **0** | | |
| OPEN-4-CUSTOM | **0** | | |
| Year Built | **2004** | | |
| Year Remodeled | **0** | | |
| Foundation | **1 Concrete** | | |
| 1.Concrete | 4.Wood | 7. | |
| 2.C Block | 5.Slab | 8. | |
| 3.Br/Stone | 6.Piers | 9. | |
| Basement | **4 Full Basement** | | |
| 1.1/4 Bmt | 4.Full Bmt | 7. | |
| 2.1/2 Bmt | 5.None | 8. | |
| 3.3/4 Bmt | 6. | 9.None | |
| Bsmt Gar # Cars | **0** | | |
| Wet Basement | **1 Dry Basement** | | |
| 1.Dry | 4. | 7. | |
| 2.Damp | 5. | 8. | |
| 3.Wet | 6. | 9. | |

| | | | |
|---|---|---|---|
| SF Bsmt Living | **0** | | |
| Fin Bsmt Grade | **0 0** | | |
| OPEN-5-CUSTOMIZE | **0** | | |
| Heat Type | **100%** | **1 Hot Water BB** | |
| 0.Uncoded | 4.Steam | 8.Fl/Wall | |
| 1.HWBB | 5.FWA | 9.No Heat | |
| 2.HWCI | 6.GravWA | 10.Radiabt | |
| 3.H Pump | 7.Electric | 12. | |
| Cool Type | **100%** | **9 None** | |
| 1.Refrig | 4.W&C Air | 7. | |
| 2.Evapor | 5. | 8. | |
| 3.H Pump | 6. | 9.None | |
| Kitchen Style | **2 Typical** | | |
| 1.Modern | 4.Obsolete | 7. | |
| 2.Typical | 5. | 8. | |
| 3.Old Type | 6. | 9.None | |
| Bath(s) Style | **2 Typical Bath(s)** | | |
| 1.Modern | 4.Obsolete | 7. | |
| 2.Typical | 5. | 8. | |
| 3.Old Type | 6. | 9.None | |
| # Rooms | **6** | | |
| # Bedrooms | **2** | | |
| # Full Baths | **2** | | |
| # Half Baths | **1** | | |
| # Addn Fixtures | **0** | | |
| # Fireplaces | **0** | | |

TRIO Software
A Division of Harris Computer Systems

| | | | |
|---|---|---|---|
| Layout | **1 Typical** | | |
| 1.Typical | 4. | 7. | |
| 2.Inadeq | 5. | 8. | |
| 3.Horrid | 6. | 9. | |
| Attic | **9 None** | | |
| 1.1/4 Fin | 4.Full Fin | 7. | |
| 2.1/2 Fin | 5.Fl/Stair | 8. | |
| 3.3/4 Fin | 6. | 9.None | |
| Insulation | **1 Full** | | |
| 1.Full | 4.Minimal | 7. | |
| 2.Heavy | 5.Partial | 8. | |
| 3.Capped | 6. | 9.None | |
| Unfinished % | **0%** | | |
| Grade & Factor | **3 Average 110%** | | |
| 1.E Grade | 4.B Grade | 7.AAA Grad | |
| 2.D Grade | 5.A Grade | 8.SC Grade | |
| 3.C Grade | 6.AA Grade | 9.Same | |
| SQFT (Footprint) | **1264** | | |
| Condition | **4 Average** | | |
| 1.Poor | 4.Avg | 7.V G | |
| 2.Fair | 5.Avg+ | 8.Exc | |
| 3.Avg- | 6.Good | 9.Same | |
| Phys. % Good | **0%** | | |
| Funct. % Good | **100%** | | |
| Functional Code | **9 None** | | |
| 1.Incomp | 4.Delap | 7.Seasonal | |
| 2.O-Built | 5.Bsmt | 8. | |
| 3.Fire | 6.2014 ADJ | 9.None | |
| Econ. % Good | **100%** | | |
| Economic Code | **None** | | |
| 0.None | 3.No Power | 7. | |
| 1.Location | 4.Generate | 8. | |
| 2.Encroach | 9.None | 9. | |
| Entrance Code | **0** | | |
| 1.Interior | 4.Vacant | 7. | |
| 2.Refusal | 5.Estimate | 8. | |
| 3.Informed | 6. | 9. | |
| Information Code | **0** | | |
| 1.Owner | 4.Agent | 7. | |
| 2.Relative | 5.Estimate | 8. | |
| 3.Tenant | 6.Other | 9. | |

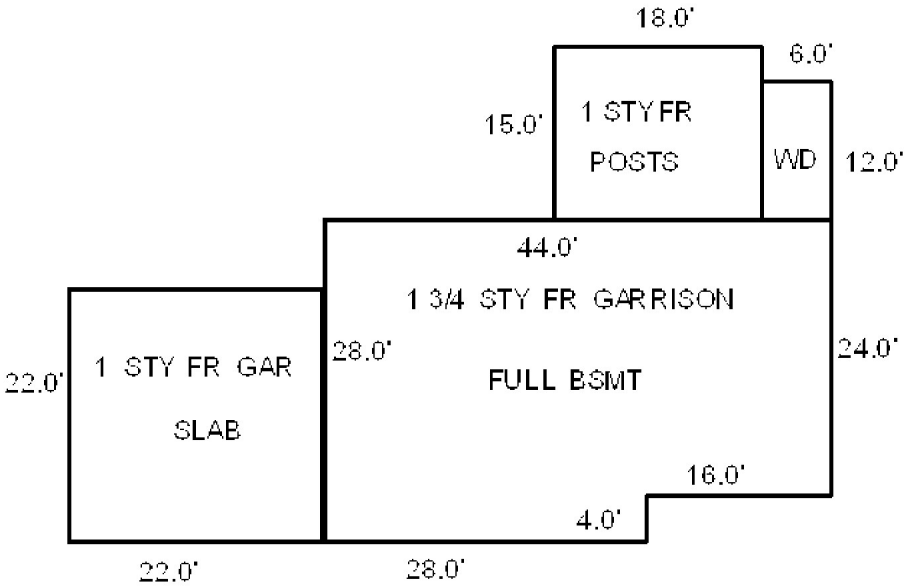

Date Inspected

## Additions, Outbuildings & Improvements

| Type | Year | Units | Grade | Cond | Phys. | Funct. | Sound Value |
|---|---|---|---|---|---|---|---|
| 81 1 SF GARAGE | 0 | 484 | 0 0 | 0 | 0 % | 0 % | |
| 68 Wood Deck | 0 | 72 | 0 0 | 0 | 0 % | 0 % | |
| 1 One Story Frame | 2008 | 240 | 0 0 | 0 | 0 % | 0 % | |
| | | | | | % | % | |
| | | | | | % | % | |
| | | | | | % | % | |
| | | | | | % | % | |
| | | | | | % | % | |
| | | | | | % | % | |
| | | | | | % | % | |

1.One Story Fram
2.Two Story Fram
3.Three Story Fr
4.1 & 1/2 Story
5.1 & 3/4 Story
6.2 & 1/2 Story
21.Open Frame Por
22.Encl Frame Por
23.Frame Garage
24.Frame Shed
25.Frame Bay Wind
26.1SFr Overhang
27.Unfin Basement
28.Unfinished Att
29.Finished Attic

Map Lot 111-024 Account 1986 Location 57 JELLISON COVE ROAD Card 1 Of 1 10/01/2020

GREEN, DAVID
GREEN, GLORI
57 JELLISON COVE ROAD
HANCOCK ME 04640

B4289P148

Previous Owner
MCLEAN, GLORI M.
45 WEST SHORE ROAD

HANCOCK ME 04640
Sale Date: 9/02/2005

Inspection Witnessed By:

X Date

| No./Date | Description | Date Insp. |
|---|---|---|
| | | |
| | | |
| | | |

Notes:
SALE OF ONE-HALF INTEREST TO DAVID GREEN.

## Property Data

Neighborhood **21 Neighborhood 21**

Tree Growth Year **0**

TREE GROWTH RECERTIFY **0**

STATE SALE CODE **0**

Zone/Land Use **11 Residential**

Secondary Zone

Topography

| | | |
|---|---|---|
| 1.Level | 4.Below St | 7. |
| 2.Rolling | 5.Low | 8. |
| 3.Above St | 6.Swampy | 9. |

Utilities

| | | |
|---|---|---|
| 1.Public | 4.Dr Well | 7.Cesspool |
| 2.Water | 5.Dug Well | 8. |
| 3.Sewer | 6.Septic | 9.None |

Street **1 Paved**

| | | |
|---|---|---|
| 1.Paved | 4.Proposed | 7. |
| 2.Semi Imp | 5. | 8. |
| 3.Gravel | 6. | 9.None |

REVIEW STRUCTURE YEAR **0**

RENTAL? 0=NO 1=YES **0**

## Sale Data

Sale Date **9/02/2005**

Price **36,500**

Sale Type **1 Land Only**

| | | |
|---|---|---|
| 1.Land | 4.Mobile | 7. |
| 2.L & B | 5.Other | 8. |
| 3.Building | 6. | 9. |

Financing **9 Unknown**

| | | |
|---|---|---|
| 1.Convent | 4.Seller | 7. |
| 2.FHA/VA | 5.Private | 8. |
| 3.Assumed | 6.Cash | 9.Unknown |

Validity **5 Partial Interest**

| | | |
|---|---|---|
| 1.Valid | 4.Split | 7.Changes |
| 2.Related | 5.Partial | 8.Other |
| 3.Distress | 6.Exempt | 9.Fr Ffclse |

Verified **5 Public Record**

| | | |
|---|---|---|
| 1.Buyer | 4.Agent | 7.Family |
| 2.Seller | 5.Pub Rec | 8.Other |
| 3.Lender | 6.MLS | 9. |

## Assessment Record

| Year | Land | Buildings | Exempt | Total |
|---|---|---|---|---|
| 2007 | 56,400 | 38,200 | 13,000 | 81,600 |
| 2008 | 56,400 | 149,000 | 13,000 | 192,400 |
| 2009 | 56,400 | 149,000 | 13,000 | 192,400 |
| 2010 | 56,400 | 149,000 | 10,000 | 195,400 |
| 2011 | 56,400 | 149,000 | 10,000 | 195,400 |
| 2012 | 56,400 | 149,000 | 10,000 | 195,400 |
| 2013 | 56,400 | 158,100 | 10,000 | 204,500 |
| 2014 | 56,400 | 155,600 | 10,800 | 201,200 |
| 2015 | 56,400 | 155,600 | 11,000 | 201,000 |
| 2016 | 56,400 | 189,600 | 16,500 | 229,500 |
| 2017 | 56,400 | 189,600 | 22,000 | 224,000 |
| 2018 | 56,400 | 189,600 | 22,000 | 224,000 |
| 2019 | 56,400 | 189,600 | 22,000 | 224,000 |
| 2020 | 56,400 | 189,600 | 25,000 | 221,000 |

## Land Data

| Front Foot | Type | Effective Frontage | Effective Depth | Influence Factor | Influence Code |
|---|---|---|---|---|---|
| 11.Regular Lot | | | | % | |
| 12.Delta Triangle | | | | % | |
| 13.Nabla Triangle | | | | % | |
| 14.Rear Land | | | | % | |
| 15.Miscellaneous | | | | % | |
| | | | | % | |
| | | | | % | |
| **Square Foot** | | **Square Feet** | | | |
| 16.Regular Lot | | | | % | |
| 17.Secondary Lot | | | | % | |
| 18.Excess Land | | | | % | |
| 19.Condominium | | | | % | |
| 20.Miscellaneous | | | | % | |
| | | | | % | |
| | | | | % | |
| **Fract. Acre** | | **Acreage/Sites** | | | |
| 21.Homesite (Frac | 21 | 1.00 | 100 | % | 0 |
| 22.Baselot (Fract | 24 | 1.20 | 100 | % | 0 |
| 23.Misc (Fract) | 44 | 1.00 | 100 | % | 0 |
| **Acres** | | | | % | |
| 24.Excess Acres 1 | | | | % | |
| 25.Excess Acres 5 | | | | % | |
| 26.Excess Acres 2 | | | | % | |
| 27.Excess Acres 5 | | | | % | |
| 28.Excess Acres 1 | | | | % | |
| 29.Excess acres | | | | % | |

**Total Acreage** 2.20

### Influence Codes

1.Unimproved
2.Excess Frtg
3.Topography
4.Size/Shape
5.Access
6.Restriction
7.Corner Infl
8.Environment
9.Fract Share
**Acres**
30.Industrial Sit
31.Working Waterf
32.Cultivated Cro
33.Pasture
34.Softwood (Farm
35.Mixed Wood (Fa
36.Hardwood (Farm
37.Softwood
38.Mixed Wood
39.Hardwood
40.Wasteland
41.Gravel Pit
42.Mobile Home Si
43.Location Base
44.Lot Improvemen
45.Waterfront A
46.Lobster Pound

**Hancock 2020**

# Hancock 2020

Map Lot 111-024 | Account 1986 | Location 57 JELLISON COVE ROAD | Card 1 Of 1 | 10/01/2020

| | | |
|---|---|---|
| Building Style | **2 Ranch** | |
| 0.Uncoded | 4.Cape | 8.Log |
| 1.Conv. | 5.Garrison | 9.Other |
| 2.Ranch | 6.Colonial | 10.Dutch C |
| 3.R Ranch | 7.Contemp | 11.Farmhou |
| Dwelling Units | **1** | |
| Other Units | **0** | |
| Stories | **1 One Story** | |
| 1.1 | 4.1.5 | 7.3.5 |
| 2.2 | 5.1.75 | 8. |
| 3.3 | 6.2.5 | 9. |
| Exterior Walls | **2 Vinyl/Aluminum** | |
| 0.Uncoded | 4.Asbestos | 8.Stone |
| 1.Wood | 5.Stucco | 9.Other |
| 2.Vin/Al | 6.Brick Ve | 10.Concret |
| 3.Compos. | 7.Solid Br | 12. |
| Roof Surface | **1 Asphalt Shingles** | |
| 1.Asphalt | 4.Composit | 7. |
| 2.Slate | 5.Wood | 8. |
| 3.Metal | 6.Other | 9. |
| SF Masonry Trim | **0** | |
| OPEN-3-CUSTOM | **0** | |
| OPEN-4-CUSTOM | **0** | |
| Year Built | **2008** | |
| Year Remodeled | **0** | |
| Foundation | **1 Concrete** | |
| 1.Concrete | 4.Wood | 7. |
| 2.C Block | 5.Slab | 8. |
| 3.Br/Stone | 6.Piers | 9. |
| Basement | **4 Full Basement** | |
| 1.1/4 Bmt | 4.Full Bmt | 7. |
| 2.1/2 Bmt | 5.None | 8. |
| 3.3/4 Bmt | 6. | 9.None |
| Bsmt Gar # Cars | **0** | |
| Wet Basement | **1 Dry Basement** | |
| 1.Dry | 4. | 7. |
| 2.Damp | 5. | 8. |
| 3.Wet | 6. | 9. |

| | | |
|---|---|---|
| SF Bsmt Living | **0** | |
| Fin Bsmt Grade | **0 0** | |
| OPEN-5-CUSTOMIZE | **0** | |
| Heat Type | **100%** | **1 Hot Water BB** |
| 0.Uncoded | 4.Steam | 8.Fl/Wall |
| 1.HWBB | 5.FWA | 9.No Heat |
| 2.HWCI | 6.GravWA | 10.Radiabt |
| 3.H Pump | 7.Electric | 12. |
| Cool Type | **100%** | **9 None** |
| 1.Refrig | 4.W&C Air | 7. |
| 2.Evapor | 5. | 8. |
| 3.H Pump | 6. | 9.None |
| Kitchen Style | **2 Typical** | |
| 1.Modern | 4.Obsolete | 7. |
| 2.Typical | 5. | 8. |
| 3.Old Type | 6. | 9.None |
| Bath(s) Style | **2 Typical Bath(s)** | |
| 1.Modern | 4.Obsolete | 7. |
| 2.Typical | 5. | 8. |
| 3.Old Type | 6. | 9.None |
| # Rooms | **6** | |
| # Bedrooms | **3** | |
| # Full Baths | **2** | |
| # Half Baths | **0** | |
| # Addn Fixtures | **0** | |
| # Fireplaces | **0** | |

TRIO Software
A Division of Harris Computer Systems

| | | |
|---|---|---|
| Layout | **1 Typical** | |
| 1.Typical | 4. | 7. |
| 2.Inadeq | 5. | 8. |
| 3.Horrid | 6. | 9. |
| Attic | **9 None** | |
| 1.1/4 Fin | 4.Full Fin | 7. |
| 2.1/2 Fin | 5.Fl/Stair | 8. |
| 3.3/4 Fin | 6. | 9.None |
| Insulation | **1 Full** | |
| 1.Full | 4.Minimal | 7. |
| 2.Heavy | 5.Partial | 8. |
| 3.Capped | 6. | 9.None |
| Unfinished % | **0%** | |
| Grade & Factor | **3 Average 90%** | |
| 1.E Grade | 4.B Grade | 7.AAA Grad |
| 2.D Grade | 5.A Grade | 8.SC Grade |
| 3.C Grade | 6.AA Grade | 9.Same |
| SQFT (Footprint) | **1456** | |
| Condition | **4 Average** | |
| 1.Poor | 4.Avg | 7.V G |
| 2.Fair | 5.Avg+ | 8.Exc |
| 3.Avg- | 6.Good | 9.Same |
| Phys. % Good | **0%** | |
| Funct. % Good | **95%** | |
| Functional Code | **6 2014 ADJUSTMENT** | |
| 1.Incomp | 4.Delap | 7.Seasonal |
| 2.O-Built | 5.Bsmt | 8. |
| 3.Fire | 6.2014 ADJ | 9.None |
| Econ. % Good | **100%** | |
| Economic Code | **None** | |
| 0.None | 3.No Power | 7. |
| 1.Location | 4.Generate | 8. |
| 2.Encroach | 9.None | 9. |
| Entrance Code | **0** | |
| 1.Interior | 4.Vacant | 7. |
| 2.Refusal | 5.Estimate | 8. |
| 3.Informed | 6. | 9. |
| Information Code | **0** | |
| 1.Owner | 4.Agent | 7. |
| 2.Relative | 5.Estimate | 8. |
| 3.Tenant | 6.Other | 9. |

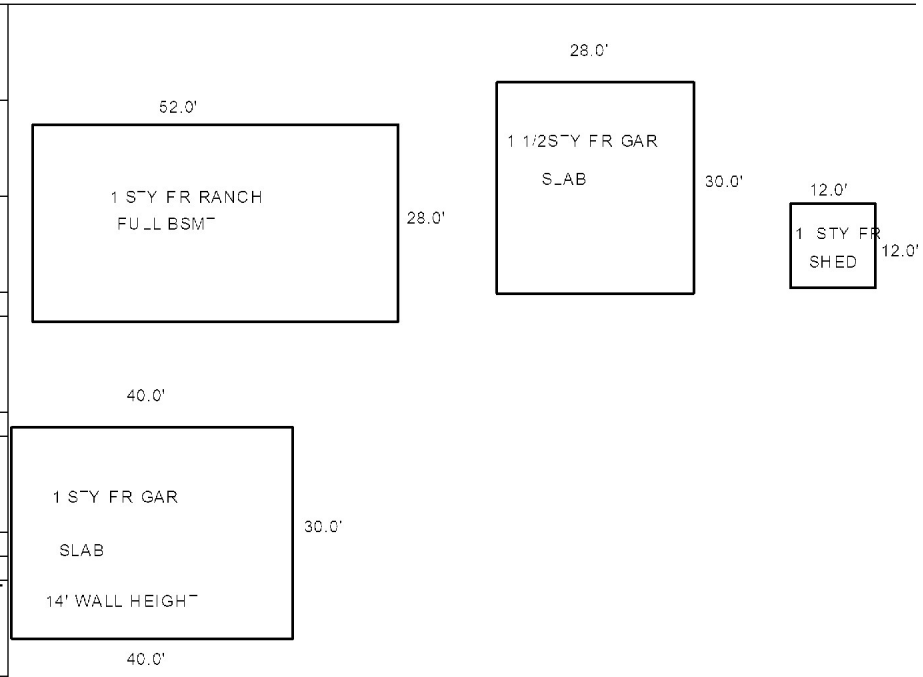


Date Inspected

## Additions, Outbuildings & Improvements

| Type | Year | Units | Grade | Cond | Phys. | Funct. | Sound Value |
|---|---|---|---|---|---|---|---|
| 24 Frame Shed | 2005 | 144 | 3 100 | 4 | 0 % | 100 % | |
| 82 1 1/2 SF GARAGE | 2013 | 780 | 0 0 | 0 | 0 % | 100 % | |
| 416 CMCL SLAB ON | 2016 | 1200 | 3 100 | 4 | 0 % | 100 % | |
| 421 COMM. STRGE | 2016 | 1200 | 3 100 | 4 | 0 % | 100 % | |
| | | | | | % | % | |
| | | | | | % | % | |
| | | | | | % | % | |
| | | | | | % | % | |
| | | | | | % | % | |
| | | | | | % | % | |

1.One Story Fram
2.Two Story Fram
3.Three Story Fr
4.1 & 1/2 Story
5.1 & 3/4 Story
6.2 & 1/2 Story
21.Open Frame Por
22.Encl Frame Por
23.Frame Garage
24.Frame Shed
25.Frame Bay Wind
26.1SFr Overhang
27.Unfin Basement
28.Unfinished Att
29.Finished Attic

Map Lot 111-025 Account 2052 Location 6 GOODWIN LANE Card 1 Of 1 10/01/2020

DEMASI, JOAN
6 GOODWIN LN
HANCOCK ME 04640

B4632P273 B4824P123 B6127P238

Previous Owner
SPOTSWOOD, MICHAEL G. & IRENE G.
6006 COUNTRY CLUB DRIVE

LAKE WALES FL 33898
Sale Date: 7/29/2013

Previous Owner
MILLS, DAN
11 CROMWELL HARBOR ROAD

BAR HARBOR ME 04609
Sale Date: 8/08/2007

Previous Owner
PATRICK, WILLIAM
359 UPPER MOUNTAIN ROAD

MONTCLAIR NJ 07043
Sale Date: 8/09/2006

Inspection Witnessed By:

X Date

| No./Date | Description | Date Insp. |
|---|---|---|
| | | |
| | | |
| | | |

Notes:

## Property Data

Neighborhood **20 Neighborhood 20**

Tree Growth Year **0**

TREE GROWTH RECERTIFY **0**

STATE SALE CODE **0**

Zone/Land Use **11 Residential**

Secondary Zone

Topography

1.Level 4.Below St 7.
2.Rolling 5.Low 8.
3.Above St 6.Swampy 9.

Utilities

1.Public 4.Dr Well 7.Cesspool
2.Water 5.Dug Well 8.
3.Sewer 6.Septic 9.None

Street

1.Paved 4.Proposed 7.
2.Semi Imp 5. 8.
3.Gravel 6. 9.None

REVIEW STRUCTURE YEAR **0**

RENTAL? 0=NO 1=YES **0**

## Sale Data

Sale Date **7/29/2013**

Price **53,000**

Sale Type **1 Land Only**

1.Land 4.Mobile 7.
2.L & B 5.Other 8.
3.Building 6. 9.

Financing **9 Unknown**

1.Convent 4.Seller 7.
2.FHA/VA 5.Private 8.
3.Assumed 6.Cash 9.Unknown

Validity **1 Arms Length Sale**

1.Valid 4.Split 7.Changes
2.Related 5.Partial 8.Other
3.Distress 6.Exempt 9.Fr Ffclse

Verified **5 Public Record**

1.Buyer 4.Agent 7.Family
2.Seller 5.Pub Rec 8.Other
3.Lender 6.MLS 9.

## Assessment Record

| Year | Land | Buildings | Exempt | Total |
|---|---|---|---|---|
| 2007 | 41,300 | 0 | 13,000 | 28,300 |
| 2008 | 41,300 | 0 | 0 | 41,300 |
| 2009 | 41,300 | 0 | 0 | 41,300 |
| 2010 | 41,300 | 0 | 0 | 41,300 |
| 2011 | 41,300 | 0 | 0 | 41,300 |
| 2012 | 41,300 | 0 | 0 | 41,300 |
| 2013 | 41,300 | 0 | 0 | 41,300 |
| 2014 | 54,300 | 62,600 | 0 | 116,900 |
| 2015 | 54,300 | 75,000 | 11,000 | 118,300 |
| 2016 | 54,300 | 75,000 | 16,500 | 112,800 |
| 2017 | 54,300 | 75,000 | 22,000 | 107,300 |
| 2018 | 54,300 | 75,000 | 22,000 | 107,300 |
| 2019 | 54,300 | 75,000 | 22,000 | 107,300 |
| 2020 | 54,300 | 75,000 | 25,000 | 104,300 |

## Land Data

| Front Foot | Type | Effective Frontage | Effective Depth | Influence Factor | Influence Code |
|---|---|---|---|---|---|
| 11.Regular Lot | | | | % | |
| 12.Delta Triangle | | | | % | |
| 13.Nabla Triangle | | | | % | |
| 14.Rear Land | | | | % | |
| 15.Miscellaneous | | | | % | |
| | | | | % | |
| | | | | % | |
| **Square Foot** | | **Square Feet** | | | |
| 16.Regular Lot | | | | % | |
| 17.Secondary Lot | | | | % | |
| 18.Excess Land | | | | % | |
| 19.Condominium | | | | % | |
| 20.Miscellaneous | | | | % | |
| | | | | % | |
| | | | | % | |
| **Fract. Acre** | | **Acreage/Sites** | | | |
| 21.Homesite (Frac | 21 | 1.00 | 100 | % | 0 |
| 22.Baselot (Fract | 24 | 1.00 | 100 | % | 0 |
| 23.Misc (Fract) | 40 | 2.90 | 100 | % | 0 |
| **Acres** | 44 | 1.00 | 100 | % | 0 |
| 24.Excess Acres 1 | | | | % | |
| 25.Excess Acres 5 | | | | % | |
| 26.Excess Acres 2 | | | | % | |
| 27.Excess Acres 5 | | | | % | |
| 28.Excess Acres 1 | | | | | |
| 29.Excess acres | | | | | |

**Total Acreage** 4.90

### Influence Codes

1.Unimproved
2.Excess Frtg
3.Topography
4.Size/Shape
5.Access
6.Restriction
7.Corner Infl
8.Environment
9.Fract Share
**Acres**
30.Industrial Sit
31.Working Waterf
32.Cultivated Cro
33.Pasture
34.Softwood (Farm
35.Mixed Wood (Fa
36.Hardwood (Farm
37.Softwood
38.Mixed Wood
39.Hardwood
40.Wasteland
41.Gravel Pit
42.Mobile Home Si
43.Location Base
44.Lot Improvemen
45.Waterfront A
46.Lobster Pound

**Hancock 2020**

# Hancock 2020

Map Lot 111-025 | Account 2052 | Location 6 GOODWIN LANE | Card 1 Of 1 | 10/01/2020

| Building Style | | |
|---|---|---|
| 0.Uncoded | 4.Cape | 8.Log |
| 1.Conv. | 5.Garrison | 9.Other |
| 2.Ranch | 6.Colonial | 10.Dutch C |
| 3.R Ranch | 7.Contemp | 11.Farmhou |

Dwelling Units

Other Units

| Stories | | |
|---|---|---|
| 1.1 | 4.1.5 | 7.3.5 |
| 2.2 | 5.1.75 | 8. |
| 3.3 | 6.2.5 | 9. |

| Exterior Walls | | |
|---|---|---|
| 0.Uncoded | 4.Asbestos | 8.Stone |
| 1.Wood | 5.Stucco | 9.Other |
| 2.Vin/Al | 6.Brick Ve | 10.Concret |
| 3.Compos. | 7.Solid Br | 12. |

| Roof Surface | | |
|---|---|---|
| 1.Asphalt | 4.Composit | 7. |
| 2.Slate | 5.Wood | 8. |
| 3.Metal | 6.Other | 9. |

SF Masonry Trim

OPEN-3-CUSTOM

OPEN-4-CUSTOM

Year Built

Year Remodeled

| Foundation | | |
|---|---|---|
| 1.Concrete | 4.Wood | 7. |
| 2.C Block | 5.Slab | 8. |
| 3.Br/Stone | 6.Piers | 9. |

| Basement | | |
|---|---|---|
| 1.1/4 Bmt | 4.Full Bmt | 7. |
| 2.1/2 Bmt | 5.None | 8. |
| 3.3/4 Bmt | 6. | 9.None |

Bsmt Gar # Cars

| Wet Basement | | |
|---|---|---|
| 1.Dry | 4. | 7. |
| 2.Damp | 5. | 8. |
| 3.Wet | 6. | 9. |

SF Bsmt Living

Fin Bsmt Grade

OPEN-5-CUSTOMIZE

| Heat Type **100%** | | |
|---|---|---|
| 0.Uncoded | 4.Steam | 8.Fl/Wall |
| 1.HWBB | 5.FWA | 9.No Heat |
| 2.HWCI | 6.GravWA | 10.Radiabt |
| 3.H Pump | 7.Electric | 12. |

| Cool Type **100%** | | |
|---|---|---|
| 1.Refrig | 4.W&C Air | 7. |
| 2.Evapor | 5. | 8. |
| 3.H Pump | 6. | 9.None |

| Kitchen Style | | |
|---|---|---|
| 1.Modern | 4.Obsolete | 7. |
| 2.Typical | 5. | 8. |
| 3.Old Type | 6. | 9.None |

| Bath(s) Style | | |
|---|---|---|
| 1.Modern | 4.Obsolete | 7. |
| 2.Typical | 5. | 8. |
| 3.Old Type | 6. | 9.None |

# Rooms

# Bedrooms

# Full Baths

# Half Baths

# Addn Fixtures

# Fireplaces

TRIO Software
A Division of Harris Computer Systems

| Layout | | |
|---|---|---|
| 1.Typical | 4. | 7. |
| 2.Inadeq | 5. | 8. |
| 3.Horrid | 6. | 9. |

| Attic | | |
|---|---|---|
| 1.1/4 Fin | 4.Full Fin | 7. |
| 2.1/2 Fin | 5.Fl/Stair | 8. |
| 3.3/4 Fin | 6. | 9.None |

| Insulation | | |
|---|---|---|
| 1.Full | 4.Minimal | 7. |
| 2.Heavy | 5.Partial | 8. |
| 3.Capped | 6. | 9.None |

Unfinished %

Grade & Factor

| | | |
|---|---|---|
| 1.E Grade | 4.B Grade | 7.AAA Grad |
| 2.D Grade | 5.A Grade | 8.SC Grade |
| 3.C Grade | 6.AA Grade | 9.Same |

SQFT (Footprint)

| Condition | | |
|---|---|---|
| 1.Poor | 4.Avg | 7.V G |
| 2.Fair | 5.Avg+ | 8.Exc |
| 3.Avg- | 6.Good | 9.Same |

Phys. % Good

Funct. % Good

| Functional Code | | |
|---|---|---|
| 1.Incomp | 4.Delap | 7.Seasonal |
| 2.O-Built | 5.Bsmt | 8. |
| 3.Fire | 6.2014 ADJ | 9.None |

Econ. % Good

| Economic Code | | |
|---|---|---|
| 0.None | 3.No Power | 7. |
| 1.Location | 4.Generate | 8. |
| 2.Encroach | 9.None | 9. |

| Entrance Code **0** | | |
|---|---|---|
| 1.Interior | 4.Vacant | 7. |
| 2.Refusal | 5.Estimate | 8. |
| 3.Informed | 6. | 9. |

| Information Code **0** | | |
|---|---|---|
| 1.Owner | 4.Agent | 7. |
| 2.Relative | 5.Estimate | 8. |
| 3.Tenant | 6.Other | 9. |

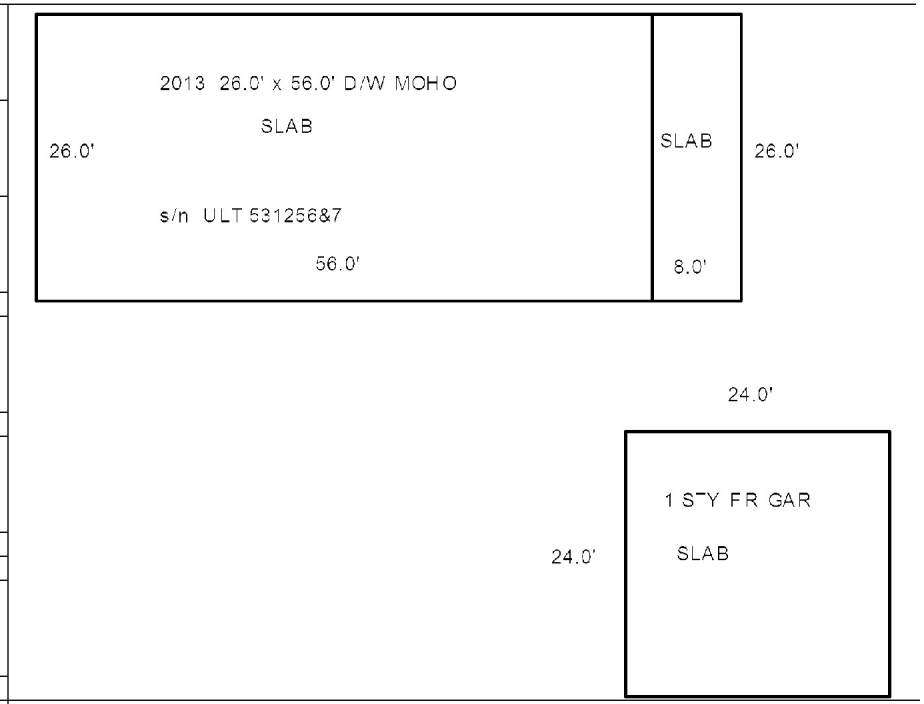

Date Inspected

## Additions, Outbuildings & Improvements

| Type | Year | Units | Grade | Cond | Phys. | Funct. | Sound Value |
|---|---|---|---|---|---|---|---|
| 994 Double Wide | 2013 | 26x56 | 3 100 | 4 | 0 % | 100 % | |
| 60 Concrete Slab | 2013 | 1664 | 3 100 | 4 | 0 % | 100 % | |
| 81 1 SF GARAGE | 2015 | 576 | 4 100 | 4 | 0 % | 100 % | |
| | | | | | % | % | |
| | | | | | % | % | |
| | | | | | % | % | |
| | | | | | % | % | |
| | | | | | % | % | |
| | | | | | % | % | |
| | | | | | % | % | |

1.One Story Fram
2.Two Story Fram
3.Three Story Fr
4.1 & 1/2 Story
5.1 & 3/4 Story
6.2 & 1/2 Story
21.Open Frame Por
22.Encl Frame Por
23.Frame Garage
24.Frame Shed
25.Frame Bay Wind
26.1SFr Overhang
27.Unfin Basement
28.Unfinished Att
29.Finished Attic