Map Lot 110-001 Account 1525 Location 699 EASTSIDE ROAD Card 1 Of 1 10/01/2020

SPERANZA, KRISTEN
699 EASTSIDE ROAD
HANCOCK ME 04640

B2846P554 B5615P46

Inspection Witnessed By:

X Date

No./Date	Description	Date Insp.

Notes:

Hancock 2020

Property Data

Neighborhood **18 Neighborhood 18**

Tree Growth Year **0**

TREE GROWTH RECERTIFY **0**

STATE SALE CODE **0**

Zone/Land Use **11 Residential**

Secondary Zone

Topography

1.Level 4.Below St 7.
2.Rolling 5.Low 8.
3.Above St 6.Swampy 9.

Utilities

1.Public 4.Dr Well 7.Cesspool
2.Water 5.Dug Well 8.
3.Sewer 6.Septic 9.None

Street

1.Paved 4.Proposed 7.
2.Semi Imp 5. 8.
3.Gravel 6. 9.None

REVIEW STRUCTURE YEAR **0**

RENTAL? 0=NO 1=YES **0**

Sale Data

Sale Date

Price

Sale Type

1.Land 4.Mobile 7.
2.L & B 5.Other 8.
3.Building 6. 9.

Financing

1.Convent 4.Seller 7.
2.FHA/VA 5.Private 8.
3.Assumed 6.Cash 9.Unknown

Validity

1.Valid 4.Split 7.Changes
2.Related 5.Partial 8.Other
3.Distress 6.Exempt 9.Fr Ffclse

Verified

1.Buyer 4.Agent 7.Family
2.Seller 5.Pub Rec 8.Other
3.Lender 6.MLS 9.

Assessment Record

Year	Land	Buildings	Exempt	Total
2007	48,500	56,100	0	104,600
2008	48,500	56,100	0	104,600
2009	48,500	56,100	0	104,600
2010	48,500	56,100	0	104,600
2011	48,500	56,100	0	104,600
2012	48,500	56,100	10,000	94,600
2013	48,500	56,100	10,000	94,600
2014	48,500	50,500	10,800	88,200
2015	48,500	50,500	11,000	88,000
2016	48,500	50,500	16,500	82,500
2017	48,500	49,300	22,000	75,800
2018	48,500	49,300	22,000	75,800
2019	48,500	49,300	22,000	75,800
2020	48,500	49,300	25,000	72,800

Land Data

Front Foot	Type	Effective Frontage	Effective Depth	Influence Factor	Influence Code
11.Regular Lot				%	
12.Delta Triangle				%	
13.Nabla Triangle				%	
14.Rear Land				%	
15.Miscellaneous				%	
				%	
				%	
Square Foot		**Square Feet**			
16.Regular Lot				%	
17.Secondary Lot				%	
18.Excess Land				%	
19.Condominium				%	
20.Miscellaneous				%	
				%	
				%	
Fract. Acre		**Acreage/Sites**			
21.Homesite (Frac	21	0.70		100 %	0
22.Baselot (Fract	44	1.00		100 %	0
23.Misc (Fract)				%	
Acres				%	
24.Excess Acres 1				%	
25.Excess Acres 5				%	
26.Excess Acres 2				%	
27.Excess Acres 5				%	
28.Excess Acres 1				%	
29.Excess acres				%	

Total Acreage 0.70

Influence Codes

1.Unimproved
2.Excess Frtg
3.Topography
4.Size/Shape
5.Access
6.Restriction
7.Corner Infl
8.Environment
9.Fract Share
Acres
30.Industrial Sit
31.Working Waterf
32.Cultivated Cro
33.Pasture
34.Softwood (Farm
35.Mixed Wood (Fa
36.Hardwood (Farm
37.Softwood
38.Mixed Wood
39.Hardwood
40.Wasteland
41.Gravel Pit
42.Mobile Home Si
43.Location Base
44.Lot Improvemen
45.Waterfront A
46.Lobster Pound

Hancock 2020

Map Lot 110-001 | Account 1525 | Location 699 EASTSIDE ROAD | Card 1 Of 1 | 10/01/2020

Building Style	**1 Conventional**	
0.Uncoded	4.Cape	8.Log
1.Conv.	5.Garrison	9.Other
2.Ranch	6.Colonial	10.Dutch C
3.R Ranch	7.Contemp	11.Farmhou
Dwelling Units	**1**	
Other Units	**0**	
Stories	**5 One & 3/4 Story**	
1.1	4.1.5	7.3.5
2.2	5.1.75	8.
3.3	6.2.5	9.
Exterior Walls	**1 Wood Siding**	
0.Uncoded	4.Asbestos	8.Stone
1.Wood	5.Stucco	9.Other
2.Vin/Al	6.Brick Ve	10.Concret
3.Compos.	7.Solid Br	12.
Roof Surface	**1 Asphalt Shingles**	
1.Asphalt	4.Composit	7.
2.Slate	5.Wood	8.
3.Metal	6.Other	9.
SF Masonry Trim	**0**	
OPEN-3-CUSTOM	**0**	
OPEN-4-CUSTOM	**0**	
Year Built	**1950**	
Year Remodeled	**0**	
Foundation	**2 Concrete Block**	
1.Concrete	4.Wood	7.
2.C Block	5.Slab	8.
3.Br/Stone	6.Piers	9.
Basement	**4 Full Basement**	
1.1/4 Bmt	4.Full Bmt	7.
2.1/2 Bmt	5.None	8.
3.3/4 Bmt	6.	9.None
Bsmt Gar # Cars	**0**	
Wet Basement	**2 Damp Basement**	
1.Dry	4.	7.
2.Damp	5.	8.
3.Wet	6.	9.

SF Bsmt Living	**0**	
Fin Bsmt Grade	**0 0**	
OPEN-5-CUSTOMIZE	**0**	
Heat Type	**100%**	**5 Forced Warm Air**
0.Uncoded	4.Steam	8.Fl/Wall
1.HWBB	5.FWA	9.No Heat
2.HWCI	6.GravWA	10.Radiabt
3.H Pump	7.Electric	12.
Cool Type	**100%**	**9 None**
1.Refrig	4.W&C Air	7.
2.Evapor	5.	8.
3.H Pump	6.	9.None
Kitchen Style	**2 Typical**	
1.Modern	4.Obsolete	7.
2.Typical	5.	8.
3.Old Type	6.	9.None
Bath(s) Style	**2 Typical Bath(s)**	
1.Modern	4.Obsolete	7.
2.Typical	5.	8.
3.Old Type	6.	9.None
# Rooms	**5**	
# Bedrooms	**3**	
# Full Baths	**1**	
# Half Baths	**0**	
# Addn Fixtures	**0**	
# Fireplaces	**1**	

TRIO Software
A Division of Harris Computer Systems

Layout	**1 Typical**	
1.Typical	4.	7.
2.Inadeq	5.	8.
3.Horrid	6.	9.
Attic	**9 None**	
1.1/4 Fin	4.Full Fin	7.
2.1/2 Fin	5.Fl/Stair	8.
3.3/4 Fin	6.	9.None
Insulation	**1 Full**	
1.Full	4.Minimal	7.
2.Heavy	5.Partial	8.
3.Capped	6.	9.None
Unfinished %	**0%**	
Grade & Factor	**2 Fair 100%**	
1.E Grade	4.B Grade	7.AAA Grad
2.D Grade	5.A Grade	8.SC Grade
3.C Grade	6.AA Grade	9.Same
SQFT (Footprint)	**794**	
Condition	**3 Below Average**	
1.Poor	4.Avg	7.V G
2.Fair	5.Avg+	8.Exc
3.Avg-	6.Good	9.Same
Phys. % Good	**0%**	
Funct. % Good	**90%**	
Functional Code	**6 2014 ADJUSTMENT**	
1.Incomp	4.Delap	7.Seasonal
2.O-Built	5.Bsmt	8.
3.Fire	6.2014 ADJ	9.None
Econ. % Good	**100%**	
Economic Code	**None**	
0.None	3.No Power	7.
1.Location	4.Generate	8.
2.Encroach	9.None	9.
Entrance Code	**0**	
1.Interior	4.Vacant	7.
2.Refusal	5.Estimate	8.
3.Informed	6.	9.
Information Code	**0**	
1.Owner	4.Agent	7.
2.Relative	5.Estimate	8.
3.Tenant	6.Other	9.

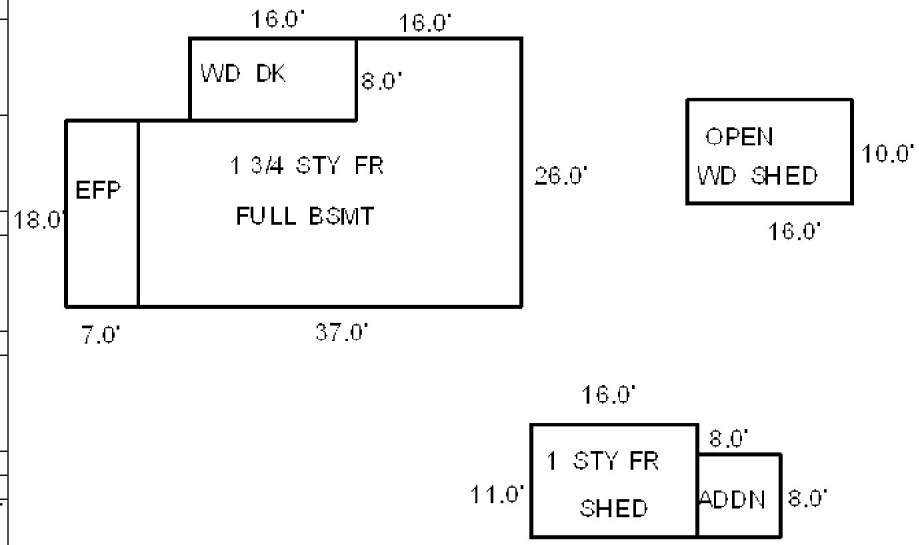

Date Inspected

Additions, Outbuildings & Improvements

Type	Year	Units	Grade	Cond	Phys.	Funct.	Sound Value
68 Wood Deck	0	128	0 0	0	0 %	0 %	
24 Frame Shed	0	240	0 0	0	0 %	0 %	
22 Encl Frame Porch	0	126	0 0	0	0 %	0 %	
24 Frame Shed	0	160	0 0	0	0 %	0 %	
					%	%	
					%	%	
					%	%	
					%	%	
					%	%	
					%	%	

1.One Story Fram
2.Two Story Fram
3.Three Story Fr
4.1 & 1/2 Story
5.1 & 3/4 Story
6.2 & 1/2 Story
21.Open Frame Por
22.Encl Frame Por
23.Frame Garage
24.Frame Shed
25.Frame Bay Wind
26.1SFr Overhang
27.Unfin Basement
28.Unfinished Att
29.Finished Attic

Map Lot 110-002 Account 1548 Location 691 EASTSIDE ROAD Card 1 Of 1 10/01/2020

PIERCE, DANNY
PIERCE, DIANE PAGANUCCI
691 EASTSIDE ROAD
HANCOCK ME 04640

B1537P277

Property Data

Neighborhood **18 Neighborhood 18**

Tree Growth Year **0**

TREE GROWTH RECERTIFY **0**

STATE SALE CODE **0**

Zone/Land Use **11 Residential**

Secondary Zone

Topography

1.Level	4.Below St	7.
2.Rolling	5.Low	8.
3.Above St	6.Swampy	9.

Utilities

1.Public	4.Dr Well	7.Cesspool
2.Water	5.Dug Well	8.
3.Sewer	6.Septic	9.None

Street **1 Paved**

1.Paved	4.Proposed	7.
2.Semi Imp	5.	8.
3.Gravel	6.	9.None

REVIEW STRUCTURE YEAR **0**

RENTAL? 0=NO 1=YES **0**

Sale Data

Sale Date

Price

Sale Type

1.Land	4.Mobile	7.
2.L & B	5.Other	8.
3.Building	6.	9.

Financing

1.Convent	4.Seller	7.
2.FHA/VA	5.Private	8.
3.Assumed	6.Cash	9.Unknown

Validity

1.Valid	4.Split	7.Changes
2.Related	5.Partial	8.Other
3.Distress	6.Exempt	9.Fr Ffclse

Verified

1.Buyer	4.Agent	7.Family
2.Seller	5.Pub Rec	8.Other
3.Lender	6.MLS	9.

Assessment Record

Year	Land	Buildings	Exempt	Total
2007	55,000	150,500	0	205,500
2008	55,000	150,500	0	205,500
2009	55,000	150,500	0	205,500
2010	55,000	150,500	0	205,500
2011	55,000	150,500	0	205,500
2012	55,000	150,500	0	205,500
2013	55,000	150,500	0	205,500
2014	55,000	143,000	0	198,000
2015	55,000	143,000	0	198,000
2016	55,000	143,000	0	198,000
2017	55,000	141,100	0	196,100
2018	55,000	141,100	0	196,100
2019	55,000	141,100	0	196,100
2020	55,000	141,100	0	196,100

Land Data

Front Foot	Type	Effective Frontage	Effective Depth	Influence Factor	Influence Code
11.Regular Lot				%	
12.Delta Triangle				%	
13.Nabla Triangle				%	
14.Rear Land				%	
15.Miscellaneous				%	
				%	
				%	
Square Foot		**Square Feet**			
16.Regular Lot				%	
17.Secondary Lot				%	
18.Excess Land				%	
19.Condominium				%	
20.Miscellaneous				%	
				%	
				%	
Fract. Acre		**Acreage/Sites**			
21.Homesite (Frac	21	1.00	100	%	0
22.Baselot (Fract	44	1.00	100	%	0
23.Misc (Fract)				%	
Acres				%	
24.Excess Acres 1				%	
25.Excess Acres 5				%	
26.Excess Acres 2				%	
27.Excess Acres 5				%	
28.Excess Acres 1				%	
29.Excess acres				%	

Total Acreage 1.00

Influence Codes

1.Unimproved
2.Excess Frtg
3.Topography
4.Size/Shape
5.Access
6.Restriction
7.Corner Infl
8.Environment
9.Fract Share
Acres
30.Industrial Sit
31.Working Waterf
32.Cultivated Cro
33.Pasture
34.Softwood (Farm
35.Mixed Wood (Fa
36.Hardwood (Farm
37.Softwood
38.Mixed Wood
39.Hardwood
40.Wasteland
41.Gravel Pit
42.Mobile Home Si
43.Location Base
44.Lot Improvemen
45.Waterfront A
46.Lobster Pound

Inspection Witnessed By:

X Date

No./Date	Description	Date Insp.

Notes:

Hancock 2020

Hancock 2020

Map Lot 110-002 | Account 1548 | Location 691 EASTSIDE ROAD | Card 1 Of 1 | 10/01/2020

Building Style	**1 Conventional**	
0.Uncoded	4.Cape	8.Log
1.Conv.	5.Garrison	9.Other
2.Ranch	6.Colonial	10.Dutch C
3.R Ranch	7.Contemp	11.Farmhou
Dwelling Units	**1**	
Other Units	**0**	
Stories	**2 Two Story**	
1.1	4.1.5	7.3.5
2.2	5.1.75	8.
3.3	6.2.5	9.
Exterior Walls	**1 Wood Siding**	
0.Uncoded	4.Asbestos	8.Stone
1.Wood	5.Stucco	9.Other
2.Vin/Al	6.Brick Ve	10.Concret
3.Compos.	7.Solid Br	12.
Roof Surface	**1 Asphalt Shingles**	
1.Asphalt	4.Composit	7.
2.Slate	5.Wood	8.
3.Metal	6.Other	9.
SF Masonry Trim	**0**	
OPEN-3-CUSTOM	**0**	
OPEN-4-CUSTOM	**0**	
Year Built	**1970**	
Year Remodeled	**0**	
Foundation	**2 Concrete Block**	
1.Concrete	4.Wood	7.
2.C Block	5.Slab	8.
3.Br/Stone	6.Piers	9.
Basement	**4 Full Basement**	
1.1/4 Bmt	4.Full Bmt	7.
2.1/2 Bmt	5.None	8.
3.3/4 Bmt	6.	9.None
Bsmt Gar # Cars	**0**	
Wet Basement	**1 Dry Basement**	
1.Dry	4.	7.
2.Damp	5.	8.
3.Wet	6.	9.

SF Bsmt Living	**0**	
Fin Bsmt Grade	**0 0**	
OPEN-5-CUSTOMIZE	**0**	
Heat Type	**100%**	**5 Forced Warm Air**
0.Uncoded	4.Steam	8.Fl/Wall
1.HWBB	5.FWA	9.No Heat
2.HWCI	6.GravWA	10.Radiabt
3.H Pump	7.Electric	12.
Cool Type	**100%**	**9 None**
1.Refrig	4.W&C Air	7.
2.Evapor	5.	8.
3.H Pump	6.	9.None
Kitchen Style	**2 Typical**	
1.Modern	4.Obsolete	7.
2.Typical	5.	8.
3.Old Type	6.	9.None
Bath(s) Style	**2 Typical Bath(s)**	
1.Modern	4.Obsolete	7.
2.Typical	5.	8.
3.Old Type	6.	9.None
# Rooms	**6**	
# Bedrooms	**3**	
# Full Baths	**2**	
# Half Baths	**0**	
# Addn Fixtures	**0**	
# Fireplaces	**0**	

TRIO Software
A Division of Harris Computer Systems

Layout	**1 Typical**	
1.Typical	4.	7.
2.Inadeq	5.	8.
3.Horrid	6.	9.
Attic	**9 None**	
1.1/4 Fin	4.Full Fin	7.
2.1/2 Fin	5.Fl/Stair	8.
3.3/4 Fin	6.	9.None
Insulation	**1 Full**	
1.Full	4.Minimal	7.
2.Heavy	5.Partial	8.
3.Capped	6.	9.None
Unfinished %	**0%**	
Grade & Factor	**3 Average 100%**	
1.E Grade	4.B Grade	7.AAA Grad
2.D Grade	5.A Grade	8.SC Grade
3.C Grade	6.AA Grade	9.Same
SQFT (Footprint)	**672**	
Condition	**4 Average**	
1.Poor	4.Avg	7.V G
2.Fair	5.Avg+	8.Exc
3.Avg-	6.Good	9.Same
Phys. % Good	**0%**	
Funct. % Good	**95%**	
Functional Code	**6 2014 ADJUSTMENT**	
1.Incomp	4.Delap	7.Seasonal
2.O-Built	5.Bsmt	8.
3.Fire	6.2014 ADJ	9.None
Econ. % Good	**100%**	
Economic Code	**None**	
0.None	3.No Power	7.
1.Location	4.Generate	8.
2.Encroach	9.None	9.
Entrance Code	**0**	
1.Interior	4.Vacant	7.
2.Refusal	5.Estimate	8.
3.Informed	6.	9.
Information Code	**0**	
1.Owner	4.Agent	7.
2.Relative	5.Estimate	8.
3.Tenant	6.Other	9.

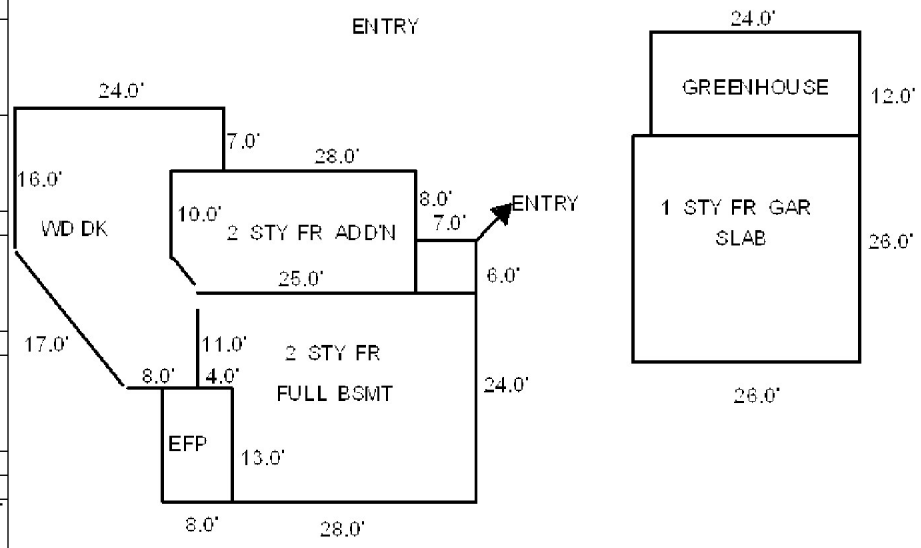

Date Inspected

Additions, Outbuildings & Improvements

Type	Year	Units	Grade	Cond	Phys.	Funct.	Sound Value
67 Barn	0	496	0 0	0	0 %	0 %	
81 1 SF GARAGE	0	676	0 0	0	0 %	0 %	
66 Res. Greenhouse	0	288	0 0	0	0 %	0 %	
68 Wood Deck	0	408	0 0	0	0 %	0 %	
2 Two Story Frame	0	392	0 0	0	0 %	0 %	
22 Encl Frame Porch	0	104	0 0	0	0 %	0 %	
					%	%	
					%	%	
					%	%	
					%	%	

1.One Story Fram
2.Two Story Fram
3.Three Story Fr
4.1 & 1/2 Story
5.1 & 3/4 Story
6.2 & 1/2 Story
21.Open Frame Por
22.Encl Frame Por
23.Frame Garage
24.Frame Shed
25.Frame Bay Wind
26.1SFr Overhang
27.Unfin Basement
28.Unfinished Att
29.Finished Attic

Map Lot 110-003 Account 1360 Location 683 EASTSIDE ROAD Card 1 Of 1 10/01/2020

SLATER, FERDINAND
SLATER, MARCIA
683 EASTSIDE RD
HANCOCK ME 04640

B2595P1

Inspection Witnessed By:

X Date

No./Date	Description	Date Insp.

Notes:

Hancock 2020

Property Data

Neighborhood **18 Neighborhood 18**

Tree Growth Year **0**

TREE GROWTH RECERTIFY **0**

STATE SALE CODE **0**

Zone/Land Use **11 Residential**

Secondary Zone

Topography

1.Level	4.Below St	7.
2.Rolling	5.Low	8.
3.Above St	6.Swampy	9.

Utilities

1.Public	4.Dr Well	7.Cesspool
2.Water	5.Dug Well	8.
3.Sewer	6.Septic	9.None

Street **1 Paved**

1.Paved	4.Proposed	7.
2.Semi Imp	5.	8.
3.Gravel	6.	9.None

REVIEW STRUCTURE YEAR **0**

RENTAL? 0=NO 1=YES **0**

Sale Data

Sale Date

Price

Sale Type

1.Land	4.Mobile	7.
2.L & B	5.Other	8.
3.Building	6.	9.

Financing

1.Convent	4.Seller	7.
2.FHA/VA	5.Private	8.
3.Assumed	6.Cash	9.Unknown

Validity

1.Valid	4.Split	7.Changes
2.Related	5.Partial	8.Other
3.Distress	6.Exempt	9.Fr Ffclse

Verified

1.Buyer	4.Agent	7.Family
2.Seller	5.Pub Rec	8.Other
3.Lender	6.MLS	9.

Assessment Record

Year	Land	Buildings	Exempt	Total
2007	55,000	56,400	13,000	98,400
2008	55,000	56,400	13,000	98,400
2009	55,000	56,400	13,000	98,400
2010	55,000	56,400	10,000	101,400
2011	55,000	56,400	10,000	101,400
2012	55,000	56,400	10,000	101,400
2013	55,000	56,400	10,000	101,400
2014	55,000	50,800	10,800	95,000
2015	55,000	50,800	11,000	94,800
2016	55,000	50,800	16,500	89,300
2017	55,000	50,800	35,200	70,600
2018	55,000	50,800	35,200	70,600
2019	55,000	50,800	35,200	70,600
2020	55,000	50,800	31,000	74,800

Land Data

Front Foot	Type	Effective Frontage	Effective Depth	Influence Factor	Influence Code
11.Regular Lot				%	
12.Delta Triangle				%	
13.Nabla Triangle				%	
14.Rear Land				%	
15.Miscellaneous				%	
				%	
				%	
Square Foot		**Square Feet**			
16.Regular Lot				%	
17.Secondary Lot				%	
18.Excess Land				%	
19.Condominium				%	
20.Miscellaneous				%	
				%	
				%	
Fract. Acre		**Acreage/Sites**			
21.Homesite (Frac	21	1.00		100 %	0
22.Baselot (Fract	44	1.00		100 %	0
23.Misc (Fract)				%	
Acres				%	
24.Excess Acres 1				%	
25.Excess Acres 5				%	
26.Excess Acres 2				%	
27.Excess Acres 5				%	
28.Excess Acres 1				%	
29.Excess acres				%	

Total Acreage 1.00

Influence Codes

1.Unimproved
2.Excess Frtg
3.Topography
4.Size/Shape
5.Access
6.Restriction
7.Corner Infl
8.Environment
9.Fract Share
Acres
30.Industrial Sit
31.Working Waterf
32.Cultivated Cro
33.Pasture
34.Softwood (Farm
35.Mixed Wood (Fa
36.Hardwood (Farm
37.Softwood
38.Mixed Wood
39.Hardwood
40.Wasteland
41.Gravel Pit
42.Mobile Home Si
43.Location Base
44.Lot Improvemen
45.Waterfront A
46.Lobster Pound

Hancock 2020

Map Lot 110-003 | Account 1360 | Location 683 EASTSIDE ROAD | Card 1 Of 1 | 10/01/2020

Building Style	**1 Conventional**		
0.Uncoded	4.Cape	8.Log	
1.Conv.	5.Garrison	9.Other	
2.Ranch	6.Colonial	10.Dutch C	
3.R Ranch	7.Contemp	11.Farmhou	
Dwelling Units	**1**		
Other Units	**0**		
Stories	**4 One & 1/2 Story**		
1.1	4.1.5	7.3.5	
2.2	5.1.75	8.	
3.3	6.2.5	9.	
Exterior Walls	**1 Wood Siding**		
0.Uncoded	4.Asbestos	8.Stone	
1.Wood	5.Stucco	9.Other	
2.Vin/Al	6.Brick Ve	10.Concret	
3.Compos.	7.Solid Br	12.	
Roof Surface	**1 Asphalt Shingles**		
1.Asphalt	4.Composit	7.	
2.Slate	5.Wood	8.	
3.Metal	6.Other	9.	
SF Masonry Trim	**0**		
OPEN-3-CUSTOM	**0**		
OPEN-4-CUSTOM	**0**		
Year Built	**1880**		
Year Remodeled	**0**		
Foundation	**1 Concrete**		
1.Concrete	4.Wood	7.	
2.C Block	5.Slab	8.	
3.Br/Stone	6.Piers	9.	
Basement	**4 Full Basement**		
1.1/4 Bmt	4.Full Bmt	7.	
2.1/2 Bmt	5.None	8.	
3.3/4 Bmt	6.	9.None	
Bsmt Gar # Cars	**0**		
Wet Basement	**1 Dry Basement**		
1.Dry	4.	7.	
2.Damp	5.	8.	
3.Wet	6.	9.	

SF Bsmt Living	**0**		
Fin Bsmt Grade	**0 0**		
OPEN-5-CUSTOMIZE	**0**		
Heat Type	**100%**	**9 Not Heated**	
0.Uncoded	4.Steam	8.Fl/Wall	
1.HWBB	5.FWA	9.No Heat	
2.HWCI	6.GravWA	10.Radiabt	
3.H Pump	7.Electric	12.	
Cool Type	**100%**	**9 None**	
1.Refrig	4.W&C Air	7.	
2.Evapor	5.	8.	
3.H Pump	6.	9.None	
Kitchen Style	**2 Typical**		
1.Modern	4.Obsolete	7.	
2.Typical	5.	8.	
3.Old Type	6.	9.None	
Bath(s) Style	**2 Typical Bath(s)**		
1.Modern	4.Obsolete	7.	
2.Typical	5.	8.	
3.Old Type	6.	9.None	
# Rooms	**4**		
# Bedrooms	**2**		
# Full Baths	**1**		
# Half Baths	**0**		
# Addn Fixtures	**1**		
# Fireplaces	**0**		

TRIO Software
A Division of Harris Computer Systems

Layout	**1 Typical**		
1.Typical	4.	7.	
2.Inadeq	5.	8.	
3.Horrid	6.	9.	
Attic	**9 None**		
1.1/4 Fin	4.Full Fin	7.	
2.1/2 Fin	5.Fl/Stair	8.	
3.3/4 Fin	6.	9.None	
Insulation	**1 Full**		
1.Full	4.Minimal	7.	
2.Heavy	5.Partial	8.	
3.Capped	6.	9.None	
Unfinished %	**0%**		
Grade & Factor	**3 Average 100%**		
1.E Grade	4.B Grade	7.AAA Grad	
2.D Grade	5.A Grade	8.SC Grade	
3.C Grade	6.AA Grade	9.Same	
SQFT (Footprint)	**616**		
Condition	**4 Average**		
1.Poor	4.Avg	7.V G	
2.Fair	5.Avg+	8.Exc	
3.Avg-	6.Good	9.Same	
Phys. % Good	**0%**		
Funct. % Good	**90%**		
Functional Code	**6 2014 ADJUSTMENT**		
1.Incomp	4.Delap	7.Seasonal	
2.O-Built	5.Bsmt	8.	
3.Fire	6.2014 ADJ	9.None	
Econ. % Good	**100%**		
Economic Code	**None**		
0.None	3.No Power	7.	
1.Location	4.Generate	8.	
2.Encroach	9.None	9.	
Entrance Code	**0**		
1.Interior	4.Vacant	7.	
2.Refusal	5.Estimate	8.	
3.Informed	6.	9.	
Information Code	**0**		
1.Owner	4.Agent	7.	
2.Relative	5.Estimate	8.	
3.Tenant	6.Other	9.	

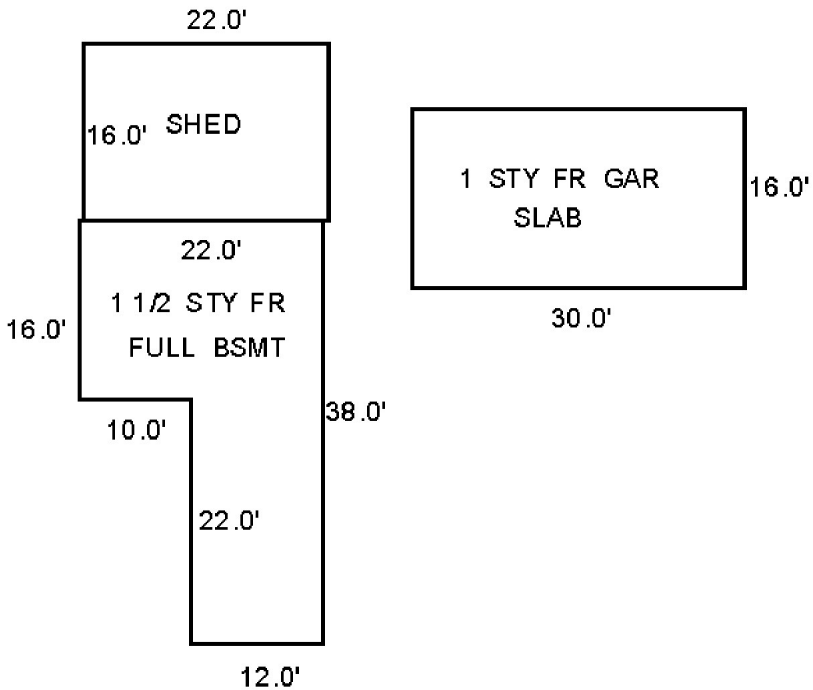

Date Inspected

Additions, Outbuildings & Improvements

Type	Year	Units	Grade	Cond	Phys.	Funct.	Sound Value
81 1 SF GARAGE	1986	480	0 0	0	0 %	0 %	
24 Frame Shed	0	352	0 0	0	0 %	0 %	
					%	%	
					%	%	
					%	%	
					%	%	
					%	%	
					%	%	
					%	%	
					%	%	

1.One Story Fram
2.Two Story Fram
3.Three Story Fr
4.1 & 1/2 Story
5.1 & 3/4 Story
6.2 & 1/2 Story
21.Open Frame Por
22.Encl Frame Por
23.Frame Garage
24.Frame Shed
25.Frame Bay Wind
26.1SFr Overhang
27.Unfin Basement
28.Unfinished Att
29.Finished Attic

Map Lot 110-004 | Account 653 | Location 673 EASTSIDE ROAD | Card 1 Of 1 | 10/01/2020

WELCH, THOMAS
WELCH, BARBARA
661 EASTSIDE ROAD
HANCOCK ME 04640

B1135P669

Previous Owner
JOHNSTON, LESLIE HEBER
C/O JANCEWICZ, DONNA
PO BOX 277
HANCOCK ME 04640
Sale Date: 12/30/2010

Inspection Witnessed By:

X Date

No./Date	Description	Date Insp.

Notes:

Property Data

Neighborhood	**18 Neighborhood 18**	
Tree Growth Year	**0**	
TREE GROWTH RECERTIFY	**0**	
STATE SALE CODE	**0**	
Zone/Land Use	**11 Residential**	
Secondary Zone		
Topography	**9**	**9**
1.Level	4.Below St	7.
2.Rolling	5.Low	8.
3.Above St	6.Swampy	9.
Utilities	**9 None**	**9 None**
1.Public	4.Dr Well	7.Cesspool
2.Water	5.Dug Well	8.
3.Sewer	6.Septic	9.None
Street	**1 Paved**	
1.Paved	4.Proposed	7.
2.Semi Imp	5.	8.
3.Gravel	6.	9.None
REVIEW STRUCTURE YEAR	**0**	
RENTAL? 0=NO 1=YES	**0**	

Sale Data

Sale Date	**12/30/2010**	
Price		
Sale Type	**1 Land Only**	
1.Land	4.Mobile	7.
2.L & B	5.Other	8.
3.Building	6.	9.
Financing	**9 Unknown**	
1.Convent	4.Seller	7.
2.FHA/VA	5.Private	8.
3.Assumed	6.Cash	9.Unknown
Validity	**8 Other Non Valid**	
1.Valid	4.Split	7.Changes
2.Related	5.Partial	8.Other
3.Distress	6.Exempt	9.Fr Ffclse
Verified	**5 Public Record**	
1.Buyer	4.Agent	7.Family
2.Seller	5.Pub Rec	8.Other
3.Lender	6.MLS	9.

Assessment Record

Year	Land	Buildings	Exempt	Total
2007	50,800	25,500	18,000	58,300
2008	41,800	17,000	19,000	39,800
2009	41,800	17,000	19,000	39,800
2010	41,800	17,000	16,000	42,800
2011	41,800	0	0	41,800
2012	41,800	0	0	41,800
2013	41,800	0	0	41,800
2014	41,800	0	0	41,800
2015	41,800	0	0	41,800
2016	41,800	0	0	41,800
2017	41,800	0	0	41,800
2018	41,800	0	0	41,800
2019	41,800	0	0	41,800
2020	41,800	0	0	41,800

Land Data

Front Foot	Type	Effective Frontage	Effective Depth	Influence Factor	Influence Code
11.Regular Lot				%	
12.Delta Triangle				%	
13.Nabla Triangle				%	
14.Rear Land				%	
15.Miscellaneous				%	
				%	
				%	
Square Foot		**Square Feet**			
16.Regular Lot				%	
17.Secondary Lot				%	
18.Excess Land				%	
19.Condominium				%	
20.Miscellaneous				%	
				%	
				%	
Fract. Acre		**Acreage/Sites**			
21.Homesite (Frac	21	0.80		100 %	0
22.Baselot (Fract	44	1.00		40 %	0
23.Misc (Fract)				%	
Acres				%	
24.Excess Acres 1				%	
25.Excess Acres 5				%	
26.Excess Acres 2				%	
27.Excess Acres 5				%	
28.Excess Acres 1				%	
29.Excess acres				%	

Total Acreage 0.80

Influence Codes

1.Unimproved
2.Excess Frtg
3.Topography
4.Size/Shape
5.Access
6.Restriction
7.Corner Infl
8.Environment
9.Fract Share
Acres
30.Industrial Sit
31.Working Waterf
32.Cultivated Cro
33.Pasture
34.Softwood (Farm
35.Mixed Wood (Fa
36.Hardwood (Farm
37.Softwood
38.Mixed Wood
39.Hardwood
40.Wasteland
41.Gravel Pit
42.Mobile Home Si
43.Location Base
44.Lot Improvemen
45.Waterfront A
46.Lobster Pound

Hancock 2020

Hancock 2020

Map Lot 110-004 | Account 653 | Location 673 EASTSIDE ROAD | Card 1 Of 1 | 10/01/2020

Building Style		
0.Uncoded	4.Cape	8.Log
1.Conv.	5.Garrison	9.Other
2.Ranch	6.Colonial	10.Dutch C
3.R Ranch	7.Contemp	11.Farmhou

Dwelling Units
Other Units

Stories		
1.1	4.1.5	7.3.5
2.2	5.1.75	8.
3.3	6.2.5	9.

Exterior Walls		
0.Uncoded	4.Asbestos	8.Stone
1.Wood	5.Stucco	9.Other
2.Vin/Al	6.Brick Ve	10.Concret
3.Compos.	7.Solid Br	12.

Roof Surface		
1.Asphalt	4.Composit	7.
2.Slate	5.Wood	8.
3.Metal	6.Other	9.

SF Masonry Trim
OPEN-3-CUSTOM
OPEN-4-CUSTOM
Year Built
Year Remodeled

Foundation		
1.Concrete	4.Wood	7.
2.C Block	5.Slab	8.
3.Br/Stone	6.Piers	9.

Basement		
1.1/4 Bmt	4.Full Bmt	7.
2.1/2 Bmt	5.None	8.
3.3/4 Bmt	6.	9.None

Bsmt Gar # Cars

Wet Basement		
1.Dry	4.	7.
2.Damp	5.	8.
3.Wet	6.	9.

SF Bsmt Living
Fin Bsmt Grade
OPEN-5-CUSTOMIZE

Heat Type **100%**		
0.Uncoded	4.Steam	8.Fl/Wall
1.HWBB	5.FWA	9.No Heat
2.HWCI	6.GravWA	10.Radiabt
3.H Pump	7.Electric	12.

Cool Type **100%**		
1.Refrig	4.W&C Air	7.
2.Evapor	5.	8.
3.H Pump	6.	9.None

Kitchen Style		
1.Modern	4.Obsolete	7.
2.Typical	5.	8.
3.Old Type	6.	9.None

Bath(s) Style		
1.Modern	4.Obsolete	7.
2.Typical	5.	8.
3.Old Type	6.	9.None

Rooms
Bedrooms
Full Baths
Half Baths
Addn Fixtures
Fireplaces

TRIO Software
A Division of Harris Computer Systems

Layout		
1.Typical	4.	7.
2.Inadeq	5.	8.
3.Horrid	6.	9.

Attic		
1.1/4 Fin	4.Full Fin	7.
2.1/2 Fin	5.Fl/Stair	8.
3.3/4 Fin	6.	9.None

Insulation		
1.Full	4.Minimal	7.
2.Heavy	5.Partial	8.
3.Capped	6.	9.None

Unfinished %

Grade & Factor		
1.E Grade	4.B Grade	7.AAA Grad
2.D Grade	5.A Grade	8.SC Grade
3.C Grade	6.AA Grade	9.Same

SQFT (Footprint)

Condition		
1.Poor	4.Avg	7.V G
2.Fair	5.Avg+	8.Exc
3.Avg-	6.Good	9.Same

Phys. % Good
Funct. % Good

Functional Code		
1.Incomp	4.Delap	7.Seasonal
2.O-Built	5.Bsmt	8.
3.Fire	6.2014 ADJ	9.None

Econ. % Good

Economic Code		
0.None	3.No Power	7.
1.Location	4.Generate	8.
2.Encroach	9.None	9.

Entrance Code **0**		
1.Interior	4.Vacant	7.
2.Refusal	5.Estimate	8.
3.Informed	6.	9.

Information Code **0**		
1.Owner	4.Agent	7.
2.Relative	5.Estimate	8.
3.Tenant	6.Other	9.

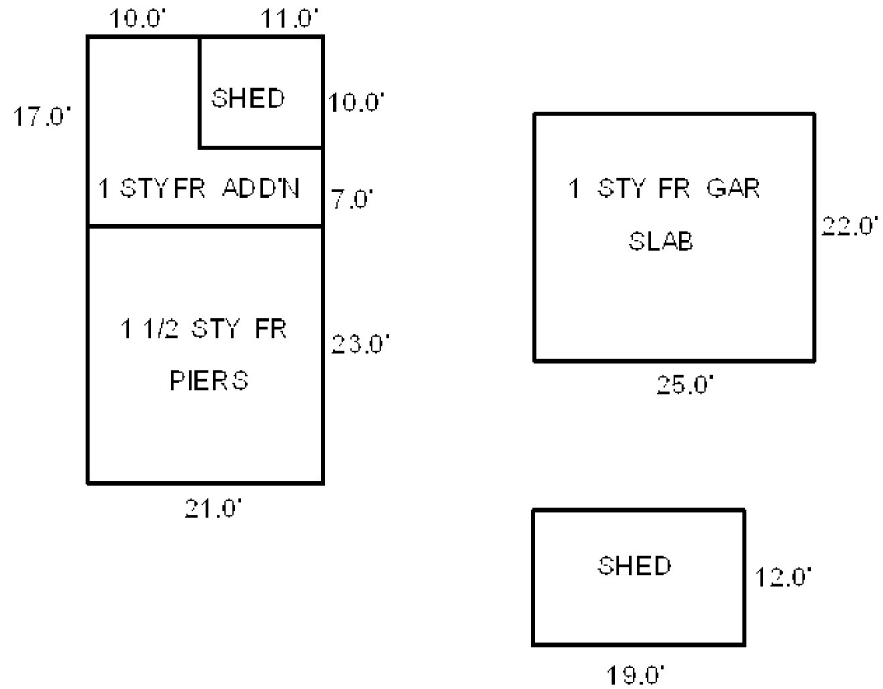

Date Inspected

Additions, Outbuildings & Improvements

Type	Year	Units	Grade	Cond	Phys.	Funct.	Sound Value
					%	%	
					%	%	
					%	%	
					%	%	
					%	%	
					%	%	
					%	%	
					%	%	
					%	%	
					%	%	

1.One Story Fram
2.Two Story Fram
3.Three Story Fr
4.1 & 1/2 Story
5.1 & 3/4 Story
6.2 & 1/2 Story
21.Open Frame Por
22.Encl Frame Por
23.Frame Garage
24.Frame Shed
25.Frame Bay Wind
26.1SFr Overhang
27.Unfin Basement
28.Unfinished Att
29.Finished Attic

Map Lot 110-005 Account 1656 Location 661 EASTSIDE ROAD Card 1 Of 1 10/01/2020

WELCH, THOMAS L
WELCH, BARBARA H
661 EASTSIDE ROAD
HANCOCK ME 04640

B1636P420

Property Data

Neighborhood **18 Neighborhood 18**

Tree Growth Year **0**

TREE GROWTH RECERTIFY **0**

STATE SALE CODE **0**

Zone/Land Use **11 Residential**

Secondary Zone

Topography

1.Level	4.Below St	7.
2.Rolling	5.Low	8.
3.Above St	6.Swampy	9.

Utilities

1.Public	4.Dr Well	7.Cesspool
2.Water	5.Dug Well	8.
3.Sewer	6.Septic	9.None

Street **1 Paved**

1.Paved	4.Proposed	7.
2.Semi Imp	5.	8.
3.Gravel	6.	9.None

REVIEW STRUCTURE YEAR **0**

RENTAL? 0=NO 1=YES **0**

Sale Data

Sale Date

Price

Sale Type

1.Land	4.Mobile	7.
2.L & B	5.Other	8.
3.Building	6.	9.

Financing

1.Convent	4.Seller	7.
2.FHA/VA	5.Private	8.
3.Assumed	6.Cash	9.Unknown

Validity

1.Valid	4.Split	7.Changes
2.Related	5.Partial	8.Other
3.Distress	6.Exempt	9.Fr Ffclse

Verified

1.Buyer	4.Agent	7.Family
2.Seller	5.Pub Rec	8.Other
3.Lender	6.MLS	9.

Assessment Record

Year	Land	Buildings	Exempt	Total
2007	61,200	213,700	13,000	261,900
2008	61,200	213,700	13,000	261,900
2009	61,200	213,700	13,000	261,900
2010	61,200	213,700	10,000	264,900
2011	61,200	213,700	10,000	264,900
2012	61,200	213,700	10,000	264,900
2013	61,200	213,700	10,000	264,900
2014	61,200	213,700	10,800	264,100
2015	61,200	213,700	11,000	263,900
2016	61,200	213,700	16,500	258,400
2017	61,200	211,300	22,000	250,500
2018	61,200	211,300	22,000	250,500
2019	61,200	211,300	22,000	250,500
2020	61,200	211,300	25,000	247,500

Land Data

Front Foot	Type	Effective Frontage	Effective Depth	Influence Factor	Influence Code
11.Regular Lot				%	
12.Delta Triangle				%	
13.Nabla Triangle				%	
14.Rear Land				%	
15.Miscellaneous				%	
				%	
				%	
Square Foot		**Square Feet**			
16.Regular Lot				%	
17.Secondary Lot				%	
18.Excess Land				%	
19.Condominium				%	
20.Miscellaneous				%	
				%	
				%	
Fract. Acre		**Acreage/Sites**			
21.Homesite (Frac	21	1.00	100	%	0
22.Baselot (Fract	24	5.00	100	%	0
23.Misc (Fract)	40	3.20	100	%	0
Acres	44	1.00	100	%	0
24.Excess Acres 1				%	
25.Excess Acres 5				%	
26.Excess Acres 2				%	
27.Excess Acres 5					
28.Excess Acres 1					
29.Excess acres					

Total Acreage 9.20

Influence Codes

1.Unimproved
2.Excess Frtg
3.Topography
4.Size/Shape
5.Access
6.Restriction
7.Corner Infl
8.Environment
9.Fract Share
Acres
30.Industrial Sit
31.Working Waterf
32.Cultivated Cro
33.Pasture
34.Softwood (Farm
35.Mixed Wood (Fa
36.Hardwood (Farm
37.Softwood
38.Mixed Wood
39.Hardwood
40.Wasteland
41.Gravel Pit
42.Mobile Home Si
43.Location Base
44.Lot Improvemen
45.Waterfront A
46.Lobster Pound

Inspection Witnessed By:

X Date

No./Date	Description	Date Insp.

Notes:

Hancock 2020

Hancock 2020

Map Lot 110-005 | Account 1656 | Location 661 EASTSIDE ROAD | Card 1 Of 1 | 10/01/2020

Building Style	**1 Conventional**	
0.Uncoded	4.Cape	8.Log
1.Conv.	5.Garrison	9.Other
2.Ranch	6.Colonial	10.Dutch C
3.R Ranch	7.Contemp	11.Farmhou
Dwelling Units	**1**	
Other Units	**0**	
Stories	**1 One Story**	
1.1	4.1.5	7.3.5
2.2	5.1.75	8.
3.3	6.2.5	9.
Exterior Walls	**1 Wood Siding**	
0.Uncoded	4.Asbestos	8.Stone
1.Wood	5.Stucco	9.Other
2.Vin/Al	6.Brick Ve	10.Concret
3.Compos.	7.Solid Br	12.
Roof Surface	**1 Asphalt Shingles**	
1.Asphalt	4.Composit	7.
2.Slate	5.Wood	8.
3.Metal	6.Other	9.
SF Masonry Trim	**0**	
OPEN-3-CUSTOM	**0**	
OPEN-4-CUSTOM	**0**	
Year Built	**1990**	
Year Remodeled	**0**	
Foundation	**1 Concrete**	
1.Concrete	4.Wood	7.
2.C Block	5.Slab	8.
3.Br/Stone	6.Piers	9.
Basement	**4 Full Basement**	
1.1/4 Bmt	4.Full Bmt	7.
2.1/2 Bmt	5.None	8.
3.3/4 Bmt	6.	9.None
Bsmt Gar # Cars	**0**	
Wet Basement	**1 Dry Basement**	
1.Dry	4.	7.
2.Damp	5.	8.
3.Wet	6.	9.

SF Bsmt Living	**0**	
Fin Bsmt Grade	**0 0**	
OPEN-5-CUSTOMIZE	**0**	
Heat Type	**100% 1 Hot Water BB**	
0.Uncoded	4.Steam	8.Fl/Wall
1.HWBB	5.FWA	9.No Heat
2.HWCI	6.GravWA	10.Radiabt
3.H Pump	7.Electric	12.
Cool Type	**100% 9 None**	
1.Refrig	4.W&C Air	7.
2.Evapor	5.	8.
3.H Pump	6.	9.None
Kitchen Style	**2 Typical**	
1.Modern	4.Obsolete	7.
2.Typical	5.	8.
3.Old Type	6.	9.None
Bath(s) Style	**2 Typical Bath(s)**	
1.Modern	4.Obsolete	7.
2.Typical	5.	8.
3.Old Type	6.	9.None
# Rooms	**5**	
# Bedrooms	**3**	
# Full Baths	**1**	
# Half Baths	**1**	
# Addn Fixtures	**0**	
# Fireplaces	**1**	

TRIO Software
A Division of Harris Computer Systems

Layout	**1 Typical**	
1.Typical	4.	7.
2.Inadeq	5.	8.
3.Horrid	6.	9.
Attic	**1 1/4 Finished**	
1.1/4 Fin	4.Full Fin	7.
2.1/2 Fin	5.Fl/Stair	8.
3.3/4 Fin	6.	9.None
Insulation	**1 Full**	
1.Full	4.Minimal	7.
2.Heavy	5.Partial	8.
3.Capped	6.	9.None
Unfinished %	**0%**	
Grade & Factor	**4 Good 100%**	
1.E Grade	4.B Grade	7.AAA Grad
2.D Grade	5.A Grade	8.SC Grade
3.C Grade	6.AA Grade	9.Same
SQFT (Footprint)	**1170**	
Condition	**4 Average**	
1.Poor	4.Avg	7.V G
2.Fair	5.Avg+	8.Exc
3.Avg-	6.Good	9.Same
Phys. % Good	**0%**	
Funct. % Good	**100%**	
Functional Code	**9 None**	
1.Incomp	4.Delap	7.Seasonal
2.O-Built	5.Bsmt	8.
3.Fire	6.2014 ADJ	9.None
Econ. % Good	**100%**	
Economic Code	**None**	
0.None	3.No Power	7.
1.Location	4.Generate	8.
2.Encroach	9.None	9.
Entrance Code	**0**	
1.Interior	4.Vacant	7.
2.Refusal	5.Estimate	8.
3.Informed	6.	9.
Information Code	**0**	
1.Owner	4.Agent	7.
2.Relative	5.Estimate	8.
3.Tenant	6.Other	9.

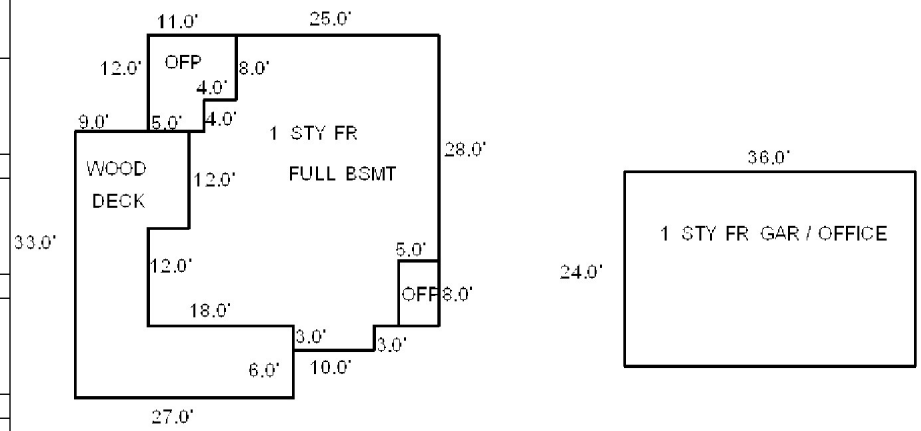

Date Inspected

Additions, Outbuildings & Improvements

Type	Year	Units	Grade	Cond	Phys.	Funct.	Sound Value
21 Open Frame	0	40	0 0	0	0 %	0 %	
21 Open Frame	0	116	0 0	0	0 %	0 %	
68 Wood Deck	0	600	0 0	0	0 %	0 %	
81 1 SF GARAGE	1993	864	5 100	4	0 %	100 %	
					%	%	
					%	%	
					%	%	
					%	%	
					%	%	
					%	%	

1.One Story Fram
2.Two Story Fram
3.Three Story Fr
4.1 & 1/2 Story
5.1 & 3/4 Story
6.2 & 1/2 Story
21.Open Frame Por
22.Encl Frame Por
23.Frame Garage
24.Frame Shed
25.Frame Bay Wind
26.1SFr Overhang
27.Unfin Basement
28.Unfinished Att
29.Finished Attic

Map Lot 110-006 Account 238 Location 641 EASTSIDE ROAD Card 1 Of 1 10/01/2020

FOUNTAIN, CLARK E
PO BOX 164
MOUNT DESERT ME 04660

B3031P106 B4661P47 B6883P322 B6884P884

Previous Owner
O'MEARA WILLIAM F. & EMMELYN, TRSTES
BALD ROCK TRUST
39 CLIFTON AVE.
MARBLEHEAD MA 01945
Sale Date: 4/11/2018

Inspection Witnessed By:

X Date

No./Date	Description	Date Insp.

Notes:

2020 - REMOVED ENCLOSED PORCH - ADDED BARN (NOT PREVIOUSLY ASSESSED) - REMOVED UNFINISHED % - CONDITION & GRADE TO AVERAGE - NOTE: AGE OF HOME ALREADY DEPRECIATING BUILDING VALUE - UNFINISHED/INCOMPLETE % NOT NEEDED

Hancock 2020

Property Data

Neighborhood **18 Neighborhood 18**

Tree Growth Year **0**

TREE GROWTH RECERTIFY **0**

STATE SALE CODE **0**

Zone/Land Use **11 Residential**

Secondary Zone

Topography **9** **9**

1.Level 4.Below St 7.
2.Rolling 5.Low 8.
3.Above St 6.Swampy 9.

Utilities **9 None** **9 None**

1.Public 4.Dr Well 7.Cesspool
2.Water 5.Dug Well 8.
3.Sewer 6.Septic 9.None

Street **1 Paved**

1.Paved 4.Proposed 7.
2.Semi Imp 5. 8.
3.Gravel 6. 9.None

REVIEW STRUCTURE YEAR **2008**

RENTAL? 0=NO 1=YES **1**

Sale Data

Sale Date **4/11/2018**

Price **225,000**

Sale Type **2 Land & Buildings**

1.Land 4.Mobile 7.
2.L & B 5.Other 8.
3.Building 6. 9.

Financing **1 Conventional**

1.Convent 4.Seller 7.
2.FHA/VA 5.Private 8.
3.Assumed 6.Cash 9.Unknown

Validity **1 Arms Length Sale**

1.Valid 4.Split 7.Changes
2.Related 5.Partial 8.Other
3.Distress 6.Exempt 9.Fr Ffclse

Verified **1 Buyer**

1.Buyer 4.Agent 7.Family
2.Seller 5.Pub Rec 8.Other
3.Lender 6.MLS 9.

Assessment Record

Year	Land	Buildings	Exempt	Total
2007	71,000	30,400	0	101,400
2008	85,000	31,400	0	116,400
2009	85,000	31,400	0	116,400
2010	85,000	31,400	0	116,400
2011	85,000	31,400	0	116,400
2012	85,000	31,400	0	116,400
2013	85,000	31,400	0	116,400
2014	85,000	28,300	0	113,300
2015	85,000	28,300	0	113,300
2016	85,000	28,300	0	113,300
2017	85,000	12,600	0	97,600
2018	85,000	12,600	0	97,600
2019	85,000	12,600	0	97,600
2020	85,000	122,200	0	207,200

Land Data

Front Foot	Type	Effective Frontage	Effective Depth	Influence Factor	Influence Code
11.Regular Lot				%	
12.Delta Triangle				%	
13.Nabla Triangle				%	
14.Rear Land				%	
15.Miscellaneous				%	
				%	
				%	
Square Foot		**Square Feet**			
16.Regular Lot				%	
17.Secondary Lot				%	
18.Excess Land				%	
19.Condominium				%	
20.Miscellaneous				%	
				%	
				%	
Fract. Acre		**Acreage/Sites**			
21.Homesite (Frac	21	1.00	100	%	0
22.Baselot (Fract	24	4.00	100	%	0
23.Misc (Fract)	25	10.00	100	%	0
Acres	40	3.60	100	%	0
24.Excess Acres 1				%	
25.Excess Acres 5				%	
26.Excess Acres 2				%	
27.Excess Acres 5					
28.Excess Acres 1					
29.Excess acres					

Total Acreage 18.60

Influence Codes

1.Unimproved
2.Excess Frtg
3.Topography
4.Size/Shape
5.Access
6.Restriction
7.Corner Infl
8.Environment
9.Fract Share
Acres
30.Industrial Sit
31.Working Waterf
32.Cultivated Cro
33.Pasture
34.Softwood (Farm
35.Mixed Wood (Fa
36.Hardwood (Farm
37.Softwood
38.Mixed Wood
39.Hardwood
40.Wasteland
41.Gravel Pit
42.Mobile Home Si
43.Location Base
44.Lot Improvemen
45.Waterfront A
46.Lobster Pound

Hancock 2020

Map Lot 110-006 | Account 238 | Location 641 EASTSIDE ROAD | Card 1 Of 1 | 10/01/2020

Building Style	**11 Farmhouse**	
0.Uncoded	4.Cape	8.Log
1.Conv.	5.Garrison	9.Other
2.Ranch	6.Colonial	10.Dutch C
3.R Ranch	7.Contemp	11.Farmhou
Dwelling Units	**1**	
Other Units	**0**	
Stories	**4 One & 1/2 Story**	
1.1	4.1.5	7.3.5
2.2	5.1.75	8.
3.3	6.2.5	9.
Exterior Walls	**1 Wood Siding**	
0.Uncoded	4.Asbestos	8.Stone
1.Wood	5.Stucco	9.Other
2.Vin/Al	6.Brick Ve	10.Concret
3.Compos.	7.Solid Br	12.
Roof Surface	**1 Asphalt Shingles**	
1.Asphalt	4.Composit	7.
2.Slate	5.Wood	8.
3.Metal	6.Other	9.
SF Masonry Trim	**0**	
OPEN-3-CUSTOM	**0**	
OPEN-4-CUSTOM	**0**	
Year Built	**1860**	
Year Remodeled	**2018**	
Foundation	**3 Brick &/or Stone**	
1.Concrete	4.Wood	7.
2.C Block	5.Slab	8.
3.Br/Stone	6.Piers	9.
Basement	**2 1/2 Basement**	
1.1/4 Bmt	4.Full Bmt	7.
2.1/2 Bmt	5.None	8.
3.3/4 Bmt	6.	9.None
Bsmt Gar # Cars	**0**	
Wet Basement	**2 Damp Basement**	
1.Dry	4.	7.
2.Damp	5.	8.
3.Wet	6.	9.

SF Bsmt Living	**0**	
Fin Bsmt Grade	**0 0**	
OPEN-5-CUSTOMIZE	**0**	
Heat Type	**100% 5 Forced Warm Air**	
0.Uncoded	4.Steam	8.Fl/Wall
1.HWBB	5.FWA	9.No Heat
2.HWCI	6.GravWA	10.Radiabt
3.H Pump	7.Electric	12.
Cool Type	**100% 9 None**	
1.Refrig	4.W&C Air	7.
2.Evapor	5.	8.
3.H Pump	6.	9.None
Kitchen Style	**2 Typical**	
1.Modern	4.Obsolete	7.
2.Typical	5.	8.
3.Old Type	6.	9.None
Bath(s) Style	**2 Typical Bath(s)**	
1.Modern	4.Obsolete	7.
2.Typical	5.	8.
3.Old Type	6.	9.None
# Rooms	**6**	
# Bedrooms	**2**	
# Full Baths	**1**	
# Half Baths	**0**	
# Addn Fixtures	**0**	
# Fireplaces	**0**	

TRIO Software
A Division of Harris Computer Systems

Layout	**1 Typical**	
1.Typical	4.	7.
2.Inadeq	5.	8.
3.Horrid	6.	9.
Attic	**0**	
1.1/4 Fin	4.Full Fin	7.
2.1/2 Fin	5.Fl/Stair	8.
3.3/4 Fin	6.	9.None
Insulation	**4 Minimal**	
1.Full	4.Minimal	7.
2.Heavy	5.Partial	8.
3.Capped	6.	9.None
Unfinished %	**0%**	
Grade & Factor	**3 Average 100%**	
1.E Grade	4.B Grade	7.AAA Grad
2.D Grade	5.A Grade	8.SC Grade
3.C Grade	6.AA Grade	9.Same
SQFT (Footprint)	**1472**	
Condition	**3 Below Average**	
1.Poor	4.Avg	7.V G
2.Fair	5.Avg+	8.Exc
3.Avg-	6.Good	9.Same
Phys. % Good	**0%**	
Funct. % Good	**100%**	
Functional Code	**9 None**	
1.Incomp	4.Delap	7.Seasonal
2.O-Built	5.Bsmt	8.
3.Fire	6.2014 ADJ	9.None
Econ. % Good	**100%**	
Economic Code	**None**	
0.None	3.No Power	7.
1.Location	4.Generate	8.
2.Encroach	9.None	9.
Entrance Code	**0**	
1.Interior	4.Vacant	7.
2.Refusal	5.Estimate	8.
3.Informed	6.	9.
Information Code	**0**	
1.Owner	4.Agent	7.
2.Relative	5.Estimate	8.
3.Tenant	6.Other	9.

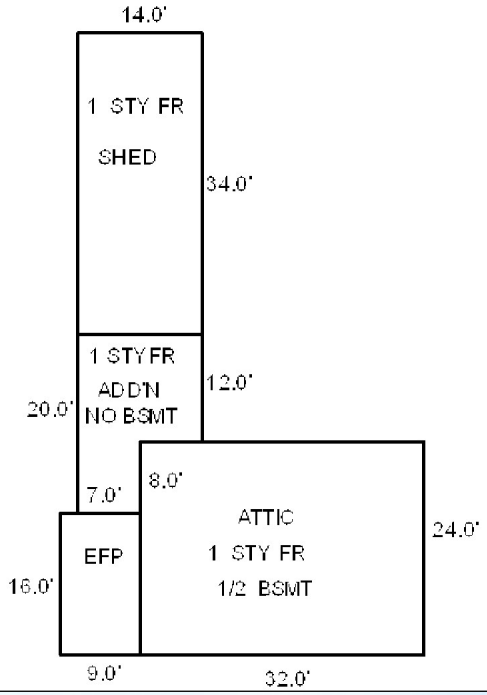

Date Inspected

Additions, Outbuildings & Improvements

Type	Year	Units	Grade	Cond	Phys.	Funct.	Sound Value
24 Frame Shed	0	476	0 0	0	0 %	0 %	
1 One Story Frame	0	224	3 100	3	100 %	50 %	
67 Barn	0	2160	3 100	3	100 %	100 %	
77 Shipping	2019				%	%	2,000
					%	%	
					%	%	
					%	%	
					%	%	
					%	%	
					%	%	

1.One Story Fram
2.Two Story Fram
3.Three Story Fr
4.1 & 1/2 Story
5.1 & 3/4 Story
6.2 & 1/2 Story
21.Open Frame Por
22.Encl Frame Por
23.Frame Garage
24.Frame Shed
25.Frame Bay Wind
26.1SFr Overhang
27.Unfin Basement
28.Unfinished Att
29.Finished Attic

Map Lot 110-007 Account 237 Location 635 EASTSIDE ROAD Card 1 Of 1 10/01/2020

MADORE, SALLY WALKER, TRUSTEE
MCKAT TRUST, THE
12 LANTERN LANE
CUMBERLAND FORESIDE ME 04110

B6079P316 B6529P213

Previous Owner
HARPER-MERCHANT, JO-LYN
635 EASTSIDE ROAD

HANCOCK ME 04640
Sale Date: 7/29/2013

Inspection Witnessed By:

X Date

No./Date	Description	Date Insp.

Notes:

Notice of foreclosure received 8/12/2010 from Drummond & Drummond on behalf of U.S. Bank National Association as Trustee for RASC 2007KS3

2/10/12 - notice of dismissal filed

Property Data

Neighborhood	**18 Neighborhood 18**	
Tree Growth Year	**0**	
TREE GROWTH RECERTIFY	**0**	
STATE SALE CODE	**0**	
Zone/Land Use	**11 Residential**	
Secondary Zone		
Topography	**9**	**9**
1.Level	4.Below St	7.
2.Rolling	5.Low	8.
3.Above St	6.Swampy	9.
Utilities	**9 None**	**9 None**
1.Public	4.Dr Well	7.Cesspool
2.Water	5.Dug Well	8.
3.Sewer	6.Septic	9.None
Street	**9 None**	
1.Paved	4.Proposed	7.
2.Semi Imp	5.	8.
3.Gravel	6.	9.None
REVIEW STRUCTURE YEAR	**0**	
RENTAL? 0=NO 1=YES	**0**	

Sale Data

Sale Date	**7/29/2013**	
Price	**24,000**	
Sale Type	**2 Land & Buildings**	
1.Land	4.Mobile	7.
2.L & B	5.Other	8.
3.Building	6.	9.
Financing	**9 Unknown**	
1.Convent	4.Seller	7.
2.FHA/VA	5.Private	8.
3.Assumed	6.Cash	9.Unknown
Validity	**9 From Foreclosure**	
1.Valid	4.Split	7.Changes
2.Related	5.Partial	8.Other
3.Distress	6.Exempt	9.Fr Ffclse
Verified	**5 Public Record**	
1.Buyer	4.Agent	7.Family
2.Seller	5.Pub Rec	8.Other
3.Lender	6.MLS	9.

Assessment Record

Year	Land	Buildings	Exempt	Total
2007	55,000	54,200	0	109,200
2008	55,000	54,200	13,000	96,200
2009	55,000	54,200	13,000	96,200
2010	55,000	54,200	10,000	99,200
2011	55,000	54,200	10,000	99,200
2012	55,000	54,200	0	109,200
2013	55,000	54,200	0	109,200
2014	55,000	0	0	55,000
2015	55,000	0	0	55,000
2016	40,000	0	0	40,000
2017	40,000	0	0	40,000
2018	40,000	0	0	40,000
2019	40,000	0	0	40,000
2020	40,000	0	0	40,000

Land Data

Front Foot	Type	Effective Frontage	Effective Depth	Influence Factor	Influence Code
11.Regular Lot				%	
12.Delta Triangle				%	
13.Nabla Triangle				%	
14.Rear Land				%	
15.Miscellaneous				%	
				%	
				%	
Square Foot		**Square Feet**			
16.Regular Lot				%	
17.Secondary Lot				%	
18.Excess Land				%	
19.Condominium				%	
20.Miscellaneous				%	
				%	
				%	
Fract. Acre		**Acreage/Sites**			
21.Homesite (Frac	21	1.00	100	%	0
22.Baselot (Fract	40	0.10	100	%	0
23.Misc (Fract)				%	
Acres				%	
24.Excess Acres 1				%	
25.Excess Acres 5				%	
26.Excess Acres 2				%	
27.Excess Acres 5				%	
28.Excess Acres 1				%	
29.Excess acres				%	

Total Acreage 1.10

Influence Codes

1.Unimproved
2.Excess Frtg
3.Topography
4.Size/Shape
5.Access
6.Restriction
7.Corner Infl
8.Environment
9.Fract Share
Acres
30.Industrial Sit
31.Working Waterf
32.Cultivated Cro
33.Pasture
34.Softwood (Farm
35.Mixed Wood (Fa
36.Hardwood (Farm
37.Softwood
38.Mixed Wood
39.Hardwood
40.Wasteland
41.Gravel Pit
42.Mobile Home Si
43.Location Base
44.Lot Improvemen
45.Waterfront A
46.Lobster Pound

Hancock 2020

Hancock 2020

Map Lot 110-007 | Account 237 | Location 635 EASTSIDE ROAD | Card 1 Of 1 | 10/01/2020

Building Style		
0.Uncoded	4.Cape	8.Log
1.Conv.	5.Garrison	9.Other
2.Ranch	6.Colonial	10.Dutch C
3.R Ranch	7.Contemp	11.Farmhou

Dwelling Units

Other Units

Stories		
1.1	4.1.5	7.3.5
2.2	5.1.75	8.
3.3	6.2.5	9.

Exterior Walls		
0.Uncoded	4.Asbestos	8.Stone
1.Wood	5.Stucco	9.Other
2.Vin/Al	6.Brick Ve	10.Concret
3.Compos.	7.Solid Br	12.

Roof Surface		
1.Asphalt	4.Composit	7.
2.Slate	5.Wood	8.
3.Metal	6.Other	9.

SF Masonry Trim

OPEN-3-CUSTOM

OPEN-4-CUSTOM

Year Built

Year Remodeled

Foundation		
1.Concrete	4.Wood	7.
2.C Block	5.Slab	8.
3.Br/Stone	6.Piers	9.

Basement		
1.1/4 Bmt	4.Full Bmt	7.
2.1/2 Bmt	5.None	8.
3.3/4 Bmt	6.	9.None

Bsmt Gar # Cars

Wet Basement		
1.Dry	4.	7.
2.Damp	5.	8.
3.Wet	6.	9.

SF Bsmt Living

Fin Bsmt Grade

OPEN-5-CUSTOMIZE

Heat Type **100%**		
0.Uncoded	4.Steam	8.Fl/Wall
1.HWBB	5.FWA	9.No Heat
2.HWCI	6.GravWA	10.Radiabt
3.H Pump	7.Electric	12.

Cool Type **100%**		
1.Refrig	4.W&C Air	7.
2.Evapor	5.	8.
3.H Pump	6.	9.None

Kitchen Style		
1.Modern	4.Obsolete	7.
2.Typical	5.	8.
3.Old Type	6.	9.None

Bath(s) Style		
1.Modern	4.Obsolete	7.
2.Typical	5.	8.
3.Old Type	6.	9.None

Rooms

Bedrooms

Full Baths

Half Baths

Addn Fixtures

Fireplaces

TRIO Software
A Division of Harris Computer Systems

Layout		
1.Typical	4.	7.
2.Inadeq	5.	8.
3.Horrid	6.	9.

Attic		
1.1/4 Fin	4.Full Fin	7.
2.1/2 Fin	5.Fl/Stair	8.
3.3/4 Fin	6.	9.None

Insulation		
1.Full	4.Minimal	7.
2.Heavy	5.Partial	8.
3.Capped	6.	9.None

Unfinished %

Grade & Factor		
1.E Grade	4.B Grade	7.AAA Grad
2.D Grade	5.A Grade	8.SC Grade
3.C Grade	6.AA Grade	9.Same

SQFT (Footprint)

Condition		
1.Poor	4.Avg	7.V G
2.Fair	5.Avg+	8.Exc
3.Avg-	6.Good	9.Same

Phys. % Good

Funct. % Good

Functional Code		
1.Incomp	4.Delap	7.Seasonal
2.O-Built	5.Bsmt	8.
3.Fire	6.2014 ADJ	9.None

Econ. % Good

Economic Code		
0.None	3.No Power	7.
1.Location	4.Generate	8.
2.Encroach	9.None	9.

Entrance Code **0**		
1.Interior	4.Vacant	7.
2.Refusal	5.Estimate	8.
3.Informed	6.	9.

Information Code **0**		
1.Owner	4.Agent	7.
2.Relative	5.Estimate	8.
3.Tenant	6.Other	9.

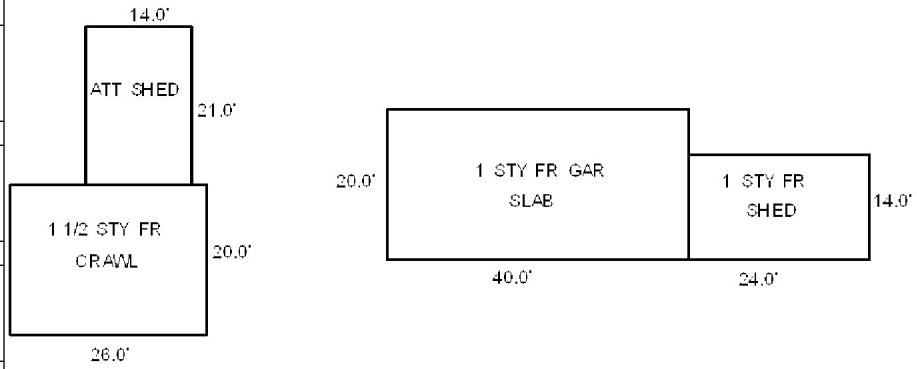

Date Inspected

Additions, Outbuildings & Improvements

Type	Year	Units	Grade	Cond	Phys.	Funct.	Sound Value
					%	%	
					%	%	
					%	%	
					%	%	
					%	%	
					%	%	
					%	%	
					%	%	
					%	%	
					%	%	

1.One Story Fram
2.Two Story Fram
3.Three Story Fr
4.1 & 1/2 Story
5.1 & 3/4 Story
6.2 & 1/2 Story
21.Open Frame Por
22.Encl Frame Por
23.Frame Garage
24.Frame Shed
25.Frame Bay Wind
26.1SFr Overhang
27.Unfin Basement
28.Unfinished Att
29.Finished Attic

Map Lot 110-008 Account 1606 Location 627 EASTSIDE ROAD Card 1 Of 1 10/01/2020

MADORE, SALLY W. , TRUSTEE
MCKAY TRUST, THE
12 LANTERN LANE
CUMBERLAND ME 04110

B3767P283 B5766P67 B6529P213

Previous Owner
TICHENOR, DAVID S. & CYNTHIA E.
15 REDGRAVE DRIVE

SEBASTIAN FL 32958
Sale Date: 2/10/2012

Inspection Witnessed By:

X Date

No./Date	Description	Date Insp.

Notes:

Hancock 2020

Property Data

Neighborhood **18 Neighborhood 18**

Tree Growth Year **0**

TREE GROWTH RECERTIFY **0**

STATE SALE CODE **0**

Zone/Land Use **11 Residential**

Secondary Zone

Topography

1.Level	4.Below St	7.
2.Rolling	5.Low	8.
3.Above St	6.Swampy	9.

Utilities

1.Public	4.Dr Well	7.Cesspool
2.Water	5.Dug Well	8.
3.Sewer	6.Septic	9.None

Street **1 Paved**

1.Paved	4.Proposed	7.
2.Semi Imp	5.	8.
3.Gravel	6.	9.None

REVIEW STRUCTURE YEAR **0**

RENTAL? 0=NO 1=YES **0**

Sale Data

Sale Date **2/10/2012**

Price **77,500**

Sale Type **2 Land & Buildings**

1.Land	4.Mobile	7.
2.L & B	5.Other	8.
3.Building	6.	9.

Financing **9 Unknown**

1.Convent	4.Seller	7.
2.FHA/VA	5.Private	8.
3.Assumed	6.Cash	9.Unknown

Validity **1 Arms Length Sale**

1.Valid	4.Split	7.Changes
2.Related	5.Partial	8.Other
3.Distress	6.Exempt	9.Fr Ffclse

Verified **5 Public Record**

1.Buyer	4.Agent	7.Family
2.Seller	5.Pub Rec	8.Other
3.Lender	6.MLS	9.

Assessment Record

Year	Land	Buildings	Exempt	Total
2007	56,200	79,200	0	135,400
2008	56,200	79,200	0	135,400
2009	56,200	79,200	0	135,400
2010	56,200	79,200	0	135,400
2011	56,200	79,200	0	135,400
2012	56,200	79,200	0	135,400
2013	56,200	79,200	0	135,400
2014	56,200	74,700	0	130,900
2015	56,200	74,700	0	130,900
2016	56,200	74,700	0	130,900
2017	56,200	73,900	0	130,100
2018	56,200	73,900	0	130,100
2019	56,200	73,900	0	130,100
2020	56,200	73,900	0	130,100

Land Data

Front Foot	Type	Effective Frontage	Effective Depth	Influence Factor	Influence Code
11.Regular Lot				%	
12.Delta Triangle				%	
13.Nabla Triangle				%	
14.Rear Land				%	
15.Miscellaneous				%	
				%	
				%	
Square Foot		**Square Feet**			
16.Regular Lot				%	
17.Secondary Lot				%	
18.Excess Land				%	
19.Condominium				%	
20.Miscellaneous				%	
				%	
				%	
Fract. Acre		**Acreage/Sites**			
21.Homesite (Frac	21	1.00		100 %	0
22.Baselot (Fract	24	1.00		100 %	0
23.Misc (Fract)	44	1.00		100 %	0
Acres				%	
24.Excess Acres 1				%	
25.Excess Acres 5				%	
26.Excess Acres 2				%	
27.Excess Acres 5				%	
28.Excess Acres 1				%	
29.Excess acres					

Total Acreage 2.00

Influence Codes

1.Unimproved
2.Excess Frtg
3.Topography
4.Size/Shape
5.Access
6.Restriction
7.Corner Infl
8.Environment
9.Fract Share
Acres
30.Industrial Sit
31.Working Waterf
32.Cultivated Cro
33.Pasture
34.Softwood (Farm
35.Mixed Wood (Fa
36.Hardwood (Farm
37.Softwood
38.Mixed Wood
39.Hardwood
40.Wasteland
41.Gravel Pit
42.Mobile Home Si
43.Location Base
44.Lot Improvemen
45.Waterfront A
46.Lobster Pound

Hancock 2020

Map Lot 110-008 | Account 1606 | Location 627 EASTSIDE ROAD | Card 1 Of 1 | 10/01/2020

Building Style	**2 Ranch**	
0.Uncoded	4.Cape	8.Log
1.Conv.	5.Garrison	9.Other
2.Ranch	6.Colonial	10.Dutch C
3.R Ranch	7.Contemp	11.Farmhou
Dwelling Units	**1**	
Other Units	**0**	
Stories	**1 One Story**	
1.1	4.1.5	7.3.5
2.2	5.1.75	8.
3.3	6.2.5	9.
Exterior Walls	**1 Wood Siding**	
0.Uncoded	4.Asbestos	8.Stone
1.Wood	5.Stucco	9.Other
2.Vin/Al	6.Brick Ve	10.Concret
3.Compos.	7.Solid Br	12.
Roof Surface	**1 Asphalt Shingles**	
1.Asphalt	4.Composit	7.
2.Slate	5.Wood	8.
3.Metal	6.Other	9.
SF Masonry Trim	**0**	
OPEN-3-CUSTOM	**0**	
OPEN-4-CUSTOM	**0**	
Year Built	**1982**	
Year Remodeled	**0**	
Foundation	**5 Concrete Slab**	
1.Concrete	4.Wood	7.
2.C Block	5.Slab	8.
3.Br/Stone	6.Piers	9.
Basement	**9 No Basement**	
1.1/4 Bmt	4.Full Bmt	7.
2.1/2 Bmt	5.None	8.
3.3/4 Bmt	6.	9.None
Bsmt Gar # Cars	**0**	
Wet Basement	**9 No Basement**	
1.Dry	4.	7.
2.Damp	5.	8.
3.Wet	6.	9.

SF Bsmt Living	**0**	
Fin Bsmt Grade	**0 0**	
OPEN-5-CUSTOMIZE	**0**	
Heat Type	**100%**	**7 Electric**
0.Uncoded	4.Steam	8.Fl/Wall
1.HWBB	5.FWA	9.No Heat
2.HWCI	6.GravWA	10.Radiabt
3.H Pump	7.Electric	12.
Cool Type	**100%**	**9 None**
1.Refrig	4.W&C Air	7.
2.Evapor	5.	8.
3.H Pump	6.	9.None
Kitchen Style	**2 Typical**	
1.Modern	4.Obsolete	7.
2.Typical	5.	8.
3.Old Type	6.	9.None
Bath(s) Style	**2 Typical Bath(s)**	
1.Modern	4.Obsolete	7.
2.Typical	5.	8.
3.Old Type	6.	9.None
# Rooms	**4**	
# Bedrooms	**2**	
# Full Baths	**1**	
# Half Baths	**0**	
# Addn Fixtures	**0**	
# Fireplaces	**0**	

TRIO Software
A Division of Harris Computer Systems

Layout	**1 Typical**	
1.Typical	4.	7.
2.Inadeq	5.	8.
3.Horrid	6.	9.
Attic	**9 None**	
1.1/4 Fin	4.Full Fin	7.
2.1/2 Fin	5.Fl/Stair	8.
3.3/4 Fin	6.	9.None
Insulation	**1 Full**	
1.Full	4.Minimal	7.
2.Heavy	5.Partial	8.
3.Capped	6.	9.None
Unfinished %	**0%**	
Grade & Factor	**3 Average 100%**	
1.E Grade	4.B Grade	7.AAA Grad
2.D Grade	5.A Grade	8.SC Grade
3.C Grade	6.AA Grade	9.Same
SQFT (Footprint)	**864**	
Condition	**5 Above Average**	
1.Poor	4.Avg	7.V G
2.Fair	5.Avg+	8.Exc
3.Avg-	6.Good	9.Same
Phys. % Good	**0%**	
Funct. % Good	**90%**	
Functional Code	**6 2014 ADJUSTMENT**	
1.Incomp	4.Delap	7.Seasonal
2.O-Built	5.Bsmt	8.
3.Fire	6.2014 ADJ	9.None
Econ. % Good	**100%**	
Economic Code	**None**	
0.None	3.No Power	7.
1.Location	4.Generate	8.
2.Encroach	9.None	9.
Entrance Code	**0**	
1.Interior	4.Vacant	7.
2.Refusal	5.Estimate	8.
3.Informed	6.	9.
Information Code	**0**	
1.Owner	4.Agent	7.
2.Relative	5.Estimate	8.
3.Tenant	6.Other	9.

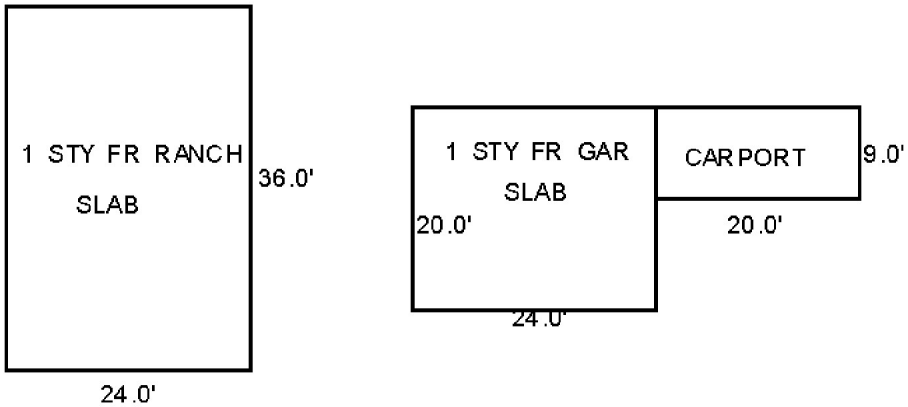

Date Inspected

Additions, Outbuildings & Improvements

Type	Year	Units	Grade	Cond	Phys.	Funct.	Sound Value
81 1 SF GARAGE	1982	480	0 0	0	0 %	0 %	
					%	%	
					%	%	
					%	%	
					%	%	
					%	%	
					%	%	
					%	%	
					%	%	
					%	%	

1.One Story Fram
2.Two Story Fram
3.Three Story Fr
4.1 & 1/2 Story
5.1 & 3/4 Story
6.2 & 1/2 Story
21.Open Frame Por
22.Encl Frame Por
23.Frame Garage
24.Frame Shed
25.Frame Bay Wind
26.1SFr Overhang
27.Unfin Basement
28.Unfinished Att
29.Finished Attic

Map Lot 110-009 Account 1847 Location 13 AGREEN WAY Card 1 Of 1 10/01/2020

STEENSTRA, JAMES
STEENSTRA, VIRGINIA
13 AVERY WAY
HANCOCK ME 04640

B4258P318 B6101P255

Previous Owner
CROSBY, BERYL H.
15 PIPER ROAD, J 112

SCARBOROUGH ME 04074
Sale Date: 8/29/2013

Previous Owner
ESTEY, KENNETH B.
ESTEY, JOANNE M.
7 STEARNS ROAD
AMHERST NY 03031 0
Sale Date: 7/26/2005

Inspection Witnessed By:

X Date

No./Date	Description	Date Insp.

Notes:

Property Data

Neighborhood	**20 Neighborhood 20**
Tree Growth Year	**0**
TREE GROWTH RECERTIFY	**0**
STATE SALE CODE	**0**
Zone/Land Use	**11 Residential**
Secondary Zone	

Topography

1.Level	4.Below St	7.
2.Rolling	5.Low	8.
3.Above St	6.Swampy	9.

Utilities

1.Public	4.Dr Well	7.Cesspool
2.Water	5.Dug Well	8.
3.Sewer	6.Septic	9.None

Street

1.Paved	4.Proposed	7.
2.Semi Imp	5.	8.
3.Gravel	6.	9.None

REVIEW STRUCTURE YEAR	**0**
RENTAL? 0=NO 1=YES	**0**

Sale Data

Sale Date	**8/29/2013**
Price	**275,000**
Sale Type	**2 Land & Buildings**

1.Land	4.Mobile	7.
2.L & B	5.Other	8.
3.Building	6.	9.

Financing **9 Unknown**

1.Convent	4.Seller	7.
2.FHA/VA	5.Private	8.
3.Assumed	6.Cash	9.Unknown

Validity **1 Arms Length Sale**

1.Valid	4.Split	7.Changes
2.Related	5.Partial	8.Other
3.Distress	6.Exempt	9.Fr Ffclse

Verified **5 Public Record**

1.Buyer	4.Agent	7.Family
2.Seller	5.Pub Rec	8.Other
3.Lender	6.MLS	9.

Assessment Record

Year	Land	Buildings	Exempt	Total
2007	53,600	289,300	0	342,900
2008	53,600	289,300	0	342,900
2009	53,600	289,300	0	342,900
2010	53,600	291,900	0	345,500
2011	53,600	291,900	0	345,500
2012	53,600	250,500	0	304,100
2013	53,600	250,500	0	304,100
2014	53,600	250,500	10,800	293,300
2015	53,600	250,500	11,000	293,100
2016	53,600	250,500	16,500	287,600
2017	53,600	248,000	22,000	279,600
2018	53,600	248,000	22,000	279,600
2019	53,600	248,000	22,000	279,600
2020	53,600	235,800	25,000	264,400

Land Data

Front Foot	Type	Effective Frontage	Effective Depth	Influence Factor	Influence Code
11.Regular Lot				%	
12.Delta Triangle				%	
13.Nabla Triangle				%	
14.Rear Land				%	
15.Miscellaneous				%	
				%	
				%	
Square Foot		**Square Feet**			
16.Regular Lot				%	
17.Secondary Lot				%	
18.Excess Land				%	
19.Condominium				%	
20.Miscellaneous				%	
				%	
				%	
Fract. Acre		**Acreage/Sites**			
21.Homesite (Frac	21	1.00	100	%	0
22.Baselot (Fract	24	0.47	100	%	0
23.Misc (Fract)	44	1.00	100	%	0
Acres				%	
24.Excess Acres 1				%	
25.Excess Acres 5				%	
26.Excess Acres 2				%	
27.Excess Acres 5				%	
28.Excess Acres 1				%	
29.Excess acres				%	

Total Acreage 1.47

Influence Codes

1.Unimproved
2.Excess Frtg
3.Topography
4.Size/Shape
5.Access
6.Restriction
7.Corner Infl
8.Environment
9.Fract Share
Acres
30.Industrial Sit
31.Working Waterf
32.Cultivated Cro
33.Pasture
34.Softwood (Farm
35.Mixed Wood (Fa
36.Hardwood (Farm
37.Softwood
38.Mixed Wood
39.Hardwood
40.Wasteland
41.Gravel Pit
42.Mobile Home Si
43.Location Base
44.Lot Improvemen
45.Waterfront A
46.Lobster Pound

Hancock 2020

Hancock 2020

Map Lot 110-009 | Account 1847 | Location 13 AGREEN WAY | Card 1 Of 1 | 10/01/2020

Building Style	**2 Ranch**		
0.Uncoded	4.Cape	8.Log	
1.Conv.	5.Garrison	9.Other	
2.Ranch	6.Colonial	10.Dutch C	
3.R Ranch	7.Contemp	11.Farmhou	
Dwelling Units	**1**		
Other Units	**0**		
Stories	**1 One Story**		
1.1	4.1.5	7.3.5	
2.2	5.1.75	8.	
3.3	6.2.5	9.	
Exterior Walls	**3 Composition**		
0.Uncoded	4.Asbestos	8.Stone	
1.Wood	5.Stucco	9.Other	
2.Vin/Al	6.Brick Ve	10.Concret	
3.Compos.	7.Solid Br	12.	
Roof Surface	**1 Asphalt Shingles**		
1.Asphalt	4.Composit	7.	
2.Slate	5.Wood	8.	
3.Metal	6.Other	9.	
SF Masonry Trim	**0**		
OPEN-3-CUSTOM	**0**		
OPEN-4-CUSTOM	**0**		
Year Built	**2005**		
Year Remodeled	**0**		
Foundation	**1 Concrete**		
1.Concrete	4.Wood	7.	
2.C Block	5.Slab	8.	
3.Br/Stone	6.Piers	9.	
Basement	**4 Full Basement**		
1.1/4 Bmt	4.Full Bmt	7.	
2.1/2 Bmt	5.None	8.	
3.3/4 Bmt	6.	9.None	
Bsmt Gar # Cars	**0**		
Wet Basement	**1 Dry Basement**		
1.Dry	4.	7.	
2.Damp	5.	8.	
3.Wet	6.	9.	

SF Bsmt Living	**0**		
Fin Bsmt Grade	**0 0**		
OPEN-5-CUSTOMIZE	**0**		
Heat Type	**100%**	**1 Hot Water BB**	
0.Uncoded	4.Steam	8.Fl/Wall	
1.HWBB	5.FWA	9.No Heat	
2.HWCI	6.GravWA	10.Radiabt	
3.H Pump	7.Electric	12.	
Cool Type	**100%**	**9 None**	
1.Refrig	4.W&C Air	7.	
2.Evapor	5.	8.	
3.H Pump	6.	9.None	
Kitchen Style	**2 Typical**		
1.Modern	4.Obsolete	7.	
2.Typical	5.	8.	
3.Old Type	6.	9.None	
Bath(s) Style	**2 Typical Bath(s)**		
1.Modern	4.Obsolete	7.	
2.Typical	5.	8.	
3.Old Type	6.	9.None	
# Rooms	**5**		
# Bedrooms	**2**		
# Full Baths	**2**		
# Half Baths	**0**		
# Addn Fixtures	**0**		
# Fireplaces	**1**		

TRIO Software
A Division of Harris Computer Systems

Layout	**1 Typical**		
1.Typical	4.	7.	
2.Inadeq	5.	8.	
3.Horrid	6.	9.	
Attic	**9 None**		
1.1/4 Fin	4.Full Fin	7.	
2.1/2 Fin	5.Fl/Stair	8.	
3.3/4 Fin	6.	9.None	
Insulation	**1 Full**		
1.Full	4.Minimal	7.	
2.Heavy	5.Partial	8.	
3.Capped	6.	9.None	
Unfinished %	**0%**		
Grade & Factor	**4 Good 95%**		
1.E Grade	4.B Grade	7.AAA Grad	
2.D Grade	5.A Grade	8.SC Grade	
3.C Grade	6.AA Grade	9.Same	
SQFT (Footprint)	**1491**		
Condition	**4 Average**		
1.Poor	4.Avg	7.V G	
2.Fair	5.Avg+	8.Exc	
3.Avg-	6.Good	9.Same	
Phys. % Good	**0%**		
Funct. % Good	**100%**		
Functional Code	**9 None**		
1.Incomp	4.Delap	7.Seasonal	
2.O-Built	5.Bsmt	8.	
3.Fire	6.2014 ADJ	9.None	
Econ. % Good	**100%**		
Economic Code	**None**		
0.None	3.No Power	7.	
1.Location	4.Generate	8.	
2.Encroach	9.None	9.	
Entrance Code	**0**		
1.Interior	4.Vacant	7.	
2.Refusal	5.Estimate	8.	
3.Informed	6.	9.	
Information Code	**0**		
1.Owner	4.Agent	7.	
2.Relative	5.Estimate	8.	
3.Tenant	6.Other	9.	

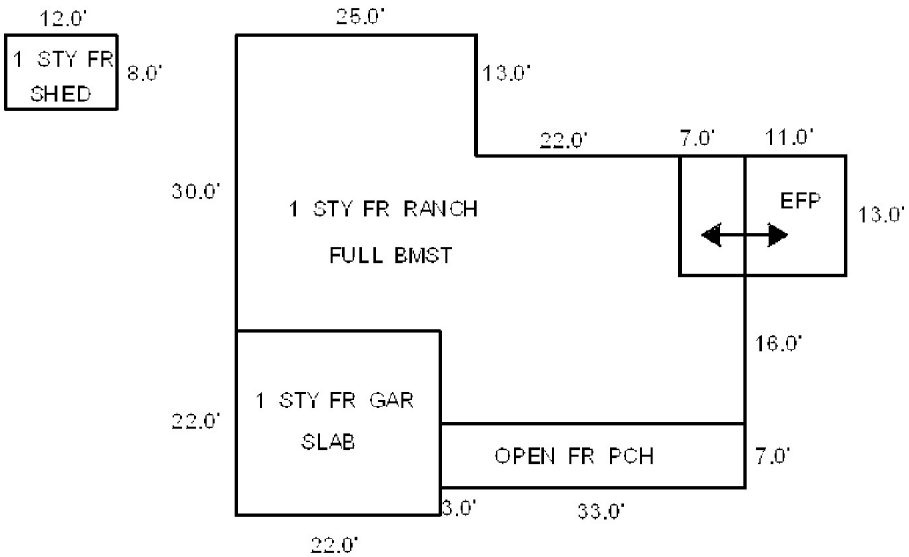

Date Inspected

Additions, Outbuildings & Improvements

Type	Year	Units	Grade	Cond	Phys.	Funct.	Sound Value
21 Open Frame	2005	231	3 100	4	0 %	100 %	
22 Encl Frame Porch	2005	91	3 100	4	0 %	100 %	
81 1 SF GARAGE	2005	441	3 100	4	0 %	100 %	
24 Frame Shed	2005	96	5 100	4	0 %	100 %	
22 Encl Frame Porch	2010	141	5 100	4	0 %	100 %	
68 Wood Deck	2018	240	3 100	4	0 %	100 %	
					%	%	
					%	%	
					%	%	
					%	%	

1.One Story Fram
2.Two Story Fram
3.Three Story Fr
4.1 & 1/2 Story
5.1 & 3/4 Story
6.2 & 1/2 Story
21.Open Frame Por
22.Encl Frame Por
23.Frame Garage
24.Frame Shed
25.Frame Bay Wind
26.1SFr Overhang
27.Unfin Basement
28.Unfinished Att
29.Finished Attic

Map Lot 110-011 Account 1848 Location 11 AGREEN WAY Card 1 Of 1 10/01/2020

COOPER, STEVEN C
COOPER, LAURA J
11 AGREEN WAY
HANCOCK ME 04640

B3514P145 B4544P215

Property Data

Neighborhood **20 Neighborhood 20**

Tree Growth Year **0**

TREE GROWTH RECERTIFY **0**

STATE SALE CODE **0**

Zone/Land Use **11 Residential**

Secondary Zone

Topography

1.Level	4.Below St	7.
2.Rolling	5.Low	8.
3.Above St	6.Swampy	9.

Utilities

1.Public	4.Dr Well	7.Cesspool
2.Water	5.Dug Well	8.
3.Sewer	6.Septic	9.None

Street

1.Paved	4.Proposed	7.
2.Semi Imp	5.	8.
3.Gravel	6.	9.None

REVIEW STRUCTURE YEAR **0**

RENTAL? 0=NO 1=YES **0**

Sale Data

Sale Date **7/14/2006**

Price **272,000**

Sale Type **2 Land & Buildings**

1.Land	4.Mobile	7.
2.L & B	5.Other	8.
3.Building	6.	9.

Financing **1 Conventional**

1.Convent	4.Seller	7.
2.FHA/VA	5.Private	8.
3.Assumed	6.Cash	9.Unknown

Validity **1 Arms Length Sale**

1.Valid	4.Split	7.Changes
2.Related	5.Partial	8.Other
3.Distress	6.Exempt	9.Fr Ffclse

Verified **5 Public Record**

1.Buyer	4.Agent	7.Family
2.Seller	5.Pub Rec	8.Other
3.Lender	6.MLS	9.

Assessment Record

Year	Land	Buildings	Exempt	Total
2007	54,400	313,600	0	368,000
2008	54,400	219,200	13,000	260,600
2009	54,400	219,200	13,000	260,600
2010	54,400	219,200	10,000	263,600
2011	54,400	219,200	10,000	263,600
2012	54,400	219,200	10,000	263,600
2013	54,400	219,200	10,000	263,600
2014	54,400	219,200	10,800	262,800
2015	54,400	219,200	11,000	262,600
2016	54,400	219,200	16,500	257,100
2017	54,400	216,900	22,000	249,300
2018	54,400	216,900	22,000	249,300
2019	54,400	216,900	22,000	249,300
2020	54,400	216,900	31,000	240,300

Land Data

Front Foot	Type	Effective Frontage	Effective Depth	Influence Factor	Influence Code
11.Regular Lot				%	
12.Delta Triangle				%	
13.Nabla Triangle				%	
14.Rear Land				%	
15.Miscellaneous				%	
				%	
				%	
Square Foot		**Square Feet**			
16.Regular Lot				%	
17.Secondary Lot				%	
18.Excess Land				%	
19.Condominium				%	
20.Miscellaneous				%	
				%	
				%	
Fract. Acre		**Acreage/Sites**			
21.Homesite (Frac	21	1.00	100	%	0
22.Baselot (Fract	24	1.16	100	%	0
23.Misc (Fract)	44	1.00	100	%	0
Acres				%	
24.Excess Acres 1				%	
25.Excess Acres 5				%	
26.Excess Acres 2				%	
27.Excess Acres 5				%	
28.Excess Acres 1				%	
29.Excess acres				%	

Total Acreage 2.16

Influence Codes

1.Unimproved
2.Excess Frtg
3.Topography
4.Size/Shape
5.Access
6.Restriction
7.Corner Infl
8.Environment
9.Fract Share
Acres
30.Industrial Sit
31.Working Waterf
32.Cultivated Cro
33.Pasture
34.Softwood (Farm
35.Mixed Wood (Fa
36.Hardwood (Farm
37.Softwood
38.Mixed Wood
39.Hardwood
40.Wasteland
41.Gravel Pit
42.Mobile Home Si
43.Location Base
44.Lot Improvemen
45.Waterfront A
46.Lobster Pound

Inspection Witnessed By:

X Date

No./Date	Description	Date Insp.

Notes:

Hancock 2020

Hancock 2020

Map Lot 110-011 | Account 1848 | Location 11 AGREEN WAY | Card 1 Of 1 | 10/01/2020

Building Style **2 Ranch**		
0.Uncoded	4.Cape	8.Log
1.Conv.	5.Garrison	9.Other
2.Ranch	6.Colonial	10.Dutch C
3.R Ranch	7.Contemp	11.Farmhou
Dwelling Units **1**		
Other Units **0**		
Stories **4 One & 1/2 Story**		
1.1	4.1.5	7.3.5
2.2	5.1.75	8.
3.3	6.2.5	9.
Exterior Walls **3 Composition**		
0.Uncoded	4.Asbestos	8.Stone
1.Wood	5.Stucco	9.Other
2.Vin/Al	6.Brick Ve	10.Concret
3.Compos.	7.Solid Br	12.
Roof Surface **1 Asphalt Shingles**		
1.Asphalt	4.Composit	7.
2.Slate	5.Wood	8.
3.Metal	6.Other	9.
SF Masonry Trim **0**		
OPEN-3-CUSTOM **0**		
OPEN-4-CUSTOM **0**		
Year Built **2005**		
Year Remodeled **0**		
Foundation **1 Concrete**		
1.Concrete	4.Wood	7.
2.C Block	5.Slab	8.
3.Br/Stone	6.Piers	9.
Basement **4 Full Basement**		
1.1/4 Bmt	4.Full Bmt	7.
2.1/2 Bmt	5.None	8.
3.3/4 Bmt	6.	9.None
Bsmt Gar # Cars **0**		
Wet Basement **1 Dry Basement**		
1.Dry	4.	7.
2.Damp	5.	8.
3.Wet	6.	9.

SF Bsmt Living **0**		
Fin Bsmt Grade **0 0**		
OPEN-5-CUSTOMIZE **0**		
Heat Type **100%** **1 Hot Water BB**		
0.Uncoded	4.Steam	8.Fl/Wall
1.HWBB	5.FWA	9.No Heat
2.HWCI	6.GravWA	10.Radiabt
3.H Pump	7.Electric	12.
Cool Type **100%** **9 None**		
1.Refrig	4.W&C Air	7.
2.Evapor	5.	8.
3.H Pump	6.	9.None
Kitchen Style **2 Typical**		
1.Modern	4.Obsolete	7.
2.Typical	5.	8.
3.Old Type	6.	9.None
Bath(s) Style **2 Typical Bath(s)**		
1.Modern	4.Obsolete	7.
2.Typical	5.	8.
3.Old Type	6.	9.None
# Rooms **5**		
# Bedrooms **2**		
# Full Baths **2**		
# Half Baths **0**		
# Addn Fixtures **0**		
# Fireplaces **0**		

TRIO Software
A Division of Harris Computer Systems

Layout **1 Typical**		
1.Typical	4.	7.
2.Inadeq	5.	8.
3.Horrid	6.	9.
Attic **9 None**		
1.1/4 Fin	4.Full Fin	7.
2.1/2 Fin	5.Fl/Stair	8.
3.3/4 Fin	6.	9.None
Insulation **1 Full**		
1.Full	4.Minimal	7.
2.Heavy	5.Partial	8.
3.Capped	6.	9.None
Unfinished % **0%**		
Grade & Factor **3 Average 90%**		
1.E Grade	4.B Grade	7.AAA Grad
2.D Grade	5.A Grade	8.SC Grade
3.C Grade	6.AA Grade	9.Same
SQFT (Footprint) **1404**		
Condition **4 Average**		
1.Poor	4.Avg	7.V G
2.Fair	5.Avg+	8.Exc
3.Avg-	6.Good	9.Same
Phys. % Good **0%**		
Funct. % Good **100%**		
Functional Code **9 None**		
1.Incomp	4.Delap	7.Seasonal
2.O-Built	5.Bsmt	8.
3.Fire	6.2014 ADJ	9.None
Econ. % Good **100%**		
Economic Code **None**		
0.None	3.No Power	7.
1.Location	4.Generate	8.
2.Encroach	9.None	9.
Entrance Code **0**		
1.Interior	4.Vacant	7.
2.Refusal	5.Estimate	8.
3.Informed	6.	9.
Information Code **0**		
1.Owner	4.Agent	7.
2.Relative	5.Estimate	8.
3.Tenant	6.Other	9.

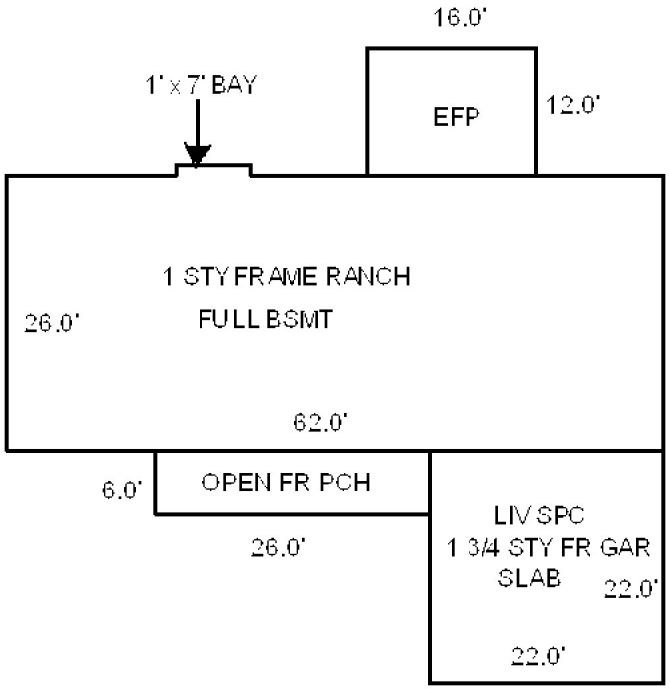

Date Inspected

Additions, Outbuildings & Improvements

Type	Year	Units	Grade	Cond	Phys.	Funct.	Sound Value
22 Encl Frame Porch	0	192	0 0	0	0 %	100 %	
25 Frame Bay	0	7	0 0	0	0 %	0 %	
87 1 3/4 STY FR	0	484	0 0	0	0 %	0 %	
21 Open Frame	0	156	0 0	0	0 %	0 %	
					%	%	
					%	%	
					%	%	
					%	%	
					%	%	
					%	%	

1.One Story Fram
2.Two Story Fram
3.Three Story Fr
4.1 & 1/2 Story
5.1 & 3/4 Story
6.2 & 1/2 Story
21.Open Frame Por
22.Encl Frame Por
23.Frame Garage
24.Frame Shed
25.Frame Bay Wind
26.1SFr Overhang
27.Unfin Basement
28.Unfinished Att
29.Finished Attic

Map Lot 110-012 Account 1845 Location 1 AGREEN WAY Card 1 Of 1 10/01/2020

SAN, CASEY
SAN, LINDA I
1 AGREEN WAY
HANCOCK ME 04640

B4930P253

Previous Owner
ESTEY, KENNETH
ESTEY, JOANNE M.
7 STEARNS ROAD
AMHERST NH 03031
Sale Date: 2/01/2008

Inspection Witnessed By:

X Date

No./Date	Description	Date Insp.

Notes:

Property Data

Neighborhood	**20 Neighborhood 20**
Tree Growth Year	**0**
TREE GROWTH RECERTIFY	**0**
STATE SALE CODE	**0**
Zone/Land Use	**11 Residential**
Secondary Zone	

Topography

1.Level	4.Below St	7.
2.Rolling	5.Low	8.
3.Above St	6.Swampy	9.

Utilities

1.Public	4.Dr Well	7.Cesspool
2.Water	5.Dug Well	8.
3.Sewer	6.Septic	9.None

Street

1.Paved	4.Proposed	7.
2.Semi Imp	5.	8.
3.Gravel	6.	9.None

REVIEW STRUCTURE YEAR	**0**
RENTAL? 0=NO 1=YES	**0**

Sale Data

Sale Date	**2/01/2008**
Price	**325,000**
Sale Type	**2 Land & Buildings**

1.Land	4.Mobile	7.
2.L & B	5.Other	8.
3.Building	6.	9.

Financing **9 Unknown**

1.Convent	4.Seller	7.
2.FHA/VA	5.Private	8.
3.Assumed	6.Cash	9.Unknown

Validity **1 Arms Length Sale**

1.Valid	4.Split	7.Changes
2.Related	5.Partial	8.Other
3.Distress	6.Exempt	9.Fr Ffclse

Verified **5 Public Record**

1.Buyer	4.Agent	7.Family
2.Seller	5.Pub Rec	8.Other
3.Lender	6.MLS	9.

Assessment Record

Year	Land	Buildings	Exempt	Total
2007	40,700	169,600	0	210,300
2008	40,700	228,900	0	269,600
2009	40,700	228,900	13,000	256,600
2010	40,700	228,900	10,000	259,600
2011	40,700	228,900	10,000	259,600
2012	40,700	228,900	10,000	259,600
2013	40,700	228,900	10,000	259,600
2014	40,700	228,900	10,800	258,800
2015	40,700	228,900	11,000	258,600
2016	40,700	228,900	16,500	253,100
2017	40,700	228,900	22,000	247,600
2018	40,700	228,900	22,000	247,600
2019	40,700	228,900	22,000	247,600
2020	40,700	228,900	25,000	244,600

Land Data

Front Foot	Type	Effective Frontage	Effective Depth	Influence Factor	Influence Code
11.Regular Lot				%	
12.Delta Triangle				%	
13.Nabla Triangle				%	
14.Rear Land				%	
15.Miscellaneous				%	
				%	
				%	
Square Foot		**Square Feet**			
16.Regular Lot				%	
17.Secondary Lot				%	
18.Excess Land				%	
19.Condominium				%	
20.Miscellaneous				%	
				%	
				%	
Fract. Acre		**Acreage/Sites**			
21.Homesite (Frac	21	1.00		100 %	0
22.Baselot (Fract	24	0.59		100 %	0
23.Misc (Fract)				%	
Acres				%	
24.Excess Acres 1				%	
25.Excess Acres 5				%	
26.Excess Acres 2				%	
27.Excess Acres 5				%	
28.Excess Acres 1				%	
29.Excess acres				%	

Total Acreage 1.59

Influence Codes

1.Unimproved
2.Excess Frtg
3.Topography
4.Size/Shape
5.Access
6.Restriction
7.Corner Infl
8.Environment
9.Fract Share
Acres
30.Industrial Sit
31.Working Waterf
32.Cultivated Cro
33.Pasture
34.Softwood (Farm
35.Mixed Wood (Fa
36.Hardwood (Farm
37.Softwood
38.Mixed Wood
39.Hardwood
40.Wasteland
41.Gravel Pit
42.Mobile Home Si
43.Location Base
44.Lot Improvemen
45.Waterfront A
46.Lobster Pound

Hancock 2020

Hancock 2020

Map Lot 110-012 | Account 1845 | Location 1 AGREEN WAY | Card 1 Of 1 | 10/01/2020

Building Style	**2 Ranch**	
0.Uncoded	4.Cape	8.Log
1.Conv.	5.Garrison	9.Other
2.Ranch	6.Colonial	10.Dutch C
3.R Ranch	7.Contemp	11.Farmhou
Dwelling Units	**1**	
Other Units	**0**	
Stories	**1 One Story**	
1.1	4.1.5	7.3.5
2.2	5.1.75	8.
3.3	6.2.5	9.
Exterior Walls	**2 Vinyl/Aluminum**	
0.Uncoded	4.Asbestos	8.Stone
1.Wood	5.Stucco	9.Other
2.Vin/Al	6.Brick Ve	10.Concret
3.Compos.	7.Solid Br	12.
Roof Surface	**1 Asphalt Shingles**	
1.Asphalt	4.Composit	7.
2.Slate	5.Wood	8.
3.Metal	6.Other	9.
SF Masonry Trim	**0**	
OPEN-3-CUSTOM	**0**	
OPEN-4-CUSTOM	**0**	
Year Built	**2006**	
Year Remodeled	**0**	
Foundation	**1 Concrete**	
1.Concrete	4.Wood	7.
2.C Block	5.Slab	8.
3.Br/Stone	6.Piers	9.
Basement	**4 Full Basement**	
1.1/4 Bmt	4.Full Bmt	7.
2.1/2 Bmt	5.None	8.
3.3/4 Bmt	6.	9.None
Bsmt Gar # Cars	**0**	
Wet Basement	**1 Dry Basement**	
1.Dry	4.	7.
2.Damp	5.	8.
3.Wet	6.	9.

SF Bsmt Living	**0**	
Fin Bsmt Grade	**0 0**	
OPEN-5-CUSTOMIZE	**0**	
Heat Type	**100%**	**1 Hot Water BB**
0.Uncoded	4.Steam	8.Fl/Wall
1.HWBB	5.FWA	9.No Heat
2.HWCI	6.GravWA	10.Radiabt
3.H Pump	7.Electric	12.
Cool Type	**100%**	**9 None**
1.Refrig	4.W&C Air	7.
2.Evapor	5.	8.
3.H Pump	6.	9.None
Kitchen Style	**2 Typical**	
1.Modern	4.Obsolete	7.
2.Typical	5.	8.
3.Old Type	6.	9.None
Bath(s) Style	**2 Typical Bath(s)**	
1.Modern	4.Obsolete	7.
2.Typical	5.	8.
3.Old Type	6.	9.None
# Rooms	**0**	
# Bedrooms	**0**	
# Full Baths	**1**	
# Half Baths	**0**	
# Addn Fixtures	**0**	
# Fireplaces	**0**	

TRIO Software
A Division of Harris Computer Systems

Layout	**0**	
1.Typical	4.	7.
2.Inadeq	5.	8.
3.Horrid	6.	9.
Attic	**0**	
1.1/4 Fin	4.Full Fin	7.
2.1/2 Fin	5.Fl/Stair	8.
3.3/4 Fin	6.	9.None
Insulation	**0**	
1.Full	4.Minimal	7.
2.Heavy	5.Partial	8.
3.Capped	6.	9.None
Unfinished %	**0%**	
Grade & Factor	**4 Good 100%**	
1.E Grade	4.B Grade	7.AAA Grad
2.D Grade	5.A Grade	8.SC Grade
3.C Grade	6.AA Grade	9.Same
SQFT (Footprint)	**1540**	
Condition	**4 Average**	
1.Poor	4.Avg	7.V G
2.Fair	5.Avg+	8.Exc
3.Avg-	6.Good	9.Same
Phys. % Good	**0%**	
Funct. % Good	**100%**	
Functional Code	**9 None**	
1.Incomp	4.Delap	7.Seasonal
2.O-Built	5.Bsmt	8.
3.Fire	6.2014 ADJ	9.None
Econ. % Good	**100%**	
Economic Code	**None**	
0.None	3.No Power	7.
1.Location	4.Generate	8.
2.Encroach	9.None	9.
Entrance Code	**0**	
1.Interior	4.Vacant	7.
2.Refusal	5.Estimate	8.
3.Informed	6.	9.
Information Code	**0**	
1.Owner	4.Agent	7.
2.Relative	5.Estimate	8.
3.Tenant	6.Other	9.

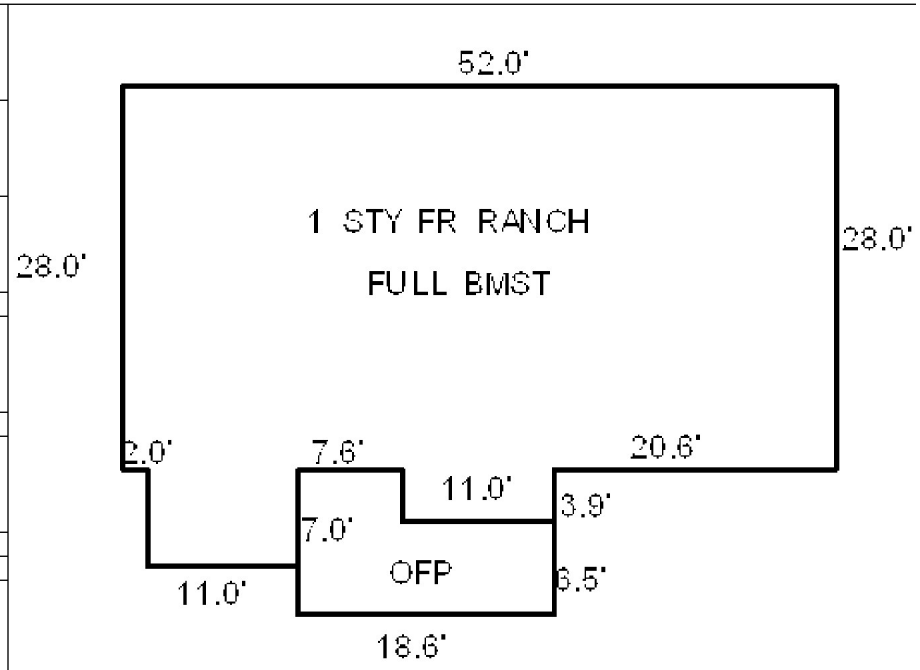

Date Inspected

Additions, Outbuildings & Improvements

Type	Year	Units	Grade	Cond	Phys.	Funct.	Sound Value
21 Open Frame	2006	158	0 0	0	0 %	0 %	
					%	%	
					%	%	
					%	%	
					%	%	
					%	%	
					%	%	
					%	%	
					%	%	

1.One Story Fram
2.Two Story Fram
3.Three Story Fr
4.1 & 1/2 Story
5.1 & 3/4 Story
6.2 & 1/2 Story
21.Open Frame Por
22.Encl Frame Por
23.Frame Garage
24.Frame Shed
25.Frame Bay Wind
26.1SFr Overhang
27.Unfin Basement
28.Unfinished Att
29.Finished Attic

Map Lot 110-013 Account 1576 Location 634 EASTSIDE ROAD Card 1 Of 1 10/01/2020

PIPER, FORREST LIFE TEN
PIPER, JANE LIFE TEN
634 EASTSIDE ROAD
HANCOCK ME 04640

B1456P438 B6923P178

Previous Owner
PIPER, FORREST & JANE
634 EASTSIDE ROAD

HANCOCK ME 04640
Sale Date: 11/19/2018

Inspection Witnessed By:

X Date

No./Date	Description	Date Insp.

Notes:

6923/178 OWNERS
MARK PIPER 1177 US HWY 1 HANCOCK, ME 04640
ZACHARY PIPER 126 EASTSIDE ROAD HANCOCK, ME 04640

Hancock 2020

Property Data

Neighborhood **18 Neighborhood 18**

Tree Growth Year **0**

TREE GROWTH RECERTIFY **0**

STATE SALE CODE **0**

Zone/Land Use **11 Residential**

Secondary Zone

Topography

1.Level	4.Below St	7.
2.Rolling	5.Low	8.
3.Above St	6.Swampy	9.

Utilities

1.Public	4.Dr Well	7.Cesspool
2.Water	5.Dug Well	8.
3.Sewer	6.Septic	9.None

Street **1 Paved**

1.Paved	4.Proposed	7.
2.Semi Imp	5.	8.
3.Gravel	6.	9.None

REVIEW STRUCTURE YEAR **0**

RENTAL? 0=NO 1=YES **0**

Sale Data

Sale Date **11/19/2018**

Price

Sale Type **2 Land & Buildings**

1.Land	4.Mobile	7.
2.L & B	5.Other	8.
3.Building	6.	9.

Financing **1 Conventional**

1.Convent	4.Seller	7.
2.FHA/VA	5.Private	8.
3.Assumed	6.Cash	9.Unknown

Validity **2 Related Parties**

1.Valid	4.Split	7.Changes
2.Related	5.Partial	8.Other
3.Distress	6.Exempt	9.Fr Ffclse

Verified **1 Buyer**

1.Buyer	4.Agent	7.Family
2.Seller	5.Pub Rec	8.Other
3.Lender	6.MLS	9.

Assessment Record

Year	Land	Buildings	Exempt	Total
2007	55,000	113,700	13,000	155,700
2008	55,000	113,700	13,000	155,700
2009	55,000	113,700	13,000	155,700
2010	55,000	113,700	10,000	158,700
2011	55,000	113,700	10,000	158,700
2012	55,000	113,700	10,000	158,700
2013	55,000	113,700	10,000	158,700
2014	55,000	108,100	10,800	152,300
2015	55,000	108,100	11,000	152,100
2016	55,000	108,100	16,500	146,600
2017	55,000	106,700	22,000	139,700
2018	55,000	106,700	22,000	139,700
2019	55,000	106,700	22,000	139,700
2020	55,000	106,700	25,000	136,700

Land Data

Front Foot	Type	Effective Frontage	Effective Depth	Influence Factor	Influence Code
11.Regular Lot				%	
12.Delta Triangle				%	
13.Nabla Triangle				%	
14.Rear Land				%	
15.Miscellaneous				%	
				%	
				%	
Square Foot		**Square Feet**			
16.Regular Lot				%	
17.Secondary Lot				%	
18.Excess Land				%	
19.Condominium				%	
20.Miscellaneous				%	
				%	
				%	
Fract. Acre		**Acreage/Sites**			
21.Homesite (Frac	21	1.00	100	%	0
22.Baselot (Fract	44	1.00	100	%	0
23.Misc (Fract)				%	
Acres				%	
24.Excess Acres 1				%	
25.Excess Acres 5				%	
26.Excess Acres 2				%	
27.Excess Acres 5				%	
28.Excess Acres 1				%	
29.Excess acres				%	

Total Acreage 1.00

Influence Codes

1.Unimproved
2.Excess Frtg
3.Topography
4.Size/Shape
5.Access
6.Restriction
7.Corner Infl
8.Environment
9.Fract Share
Acres
30.Industrial Sit
31.Working Waterf
32.Cultivated Cro
33.Pasture
34.Softwood (Farm
35.Mixed Wood (Fa
36.Hardwood (Farm
37.Softwood
38.Mixed Wood
39.Hardwood
40.Wasteland
41.Gravel Pit
42.Mobile Home Si
43.Location Base
44.Lot Improvemen
45.Waterfront A
46.Lobster Pound

Hancock 2020

Map Lot 110-013 | Account 1576 | Location 634 EASTSIDE ROAD | Card 1 Of 1 | 10/01/2020

Building Style	**1 Conventional**	
0.Uncoded	4.Cape	8.Log
1.Conv.	5.Garrison	9.Other
2.Ranch	6.Colonial	10.Dutch C
3.R Ranch	7.Contemp	11.Farmhou
Dwelling Units	**1**	
Other Units	**0**	
Stories	**4 One & 1/2 Story**	
1.1	4.1.5	7.3.5
2.2	5.1.75	8.
3.3	6.2.5	9.
Exterior Walls	**1 Wood Siding**	
0.Uncoded	4.Asbestos	8.Stone
1.Wood	5.Stucco	9.Other
2.Vin/Al	6.Brick Ve	10.Concret
3.Compos.	7.Solid Br	12.
Roof Surface	**1 Asphalt Shingles**	
1.Asphalt	4.Composit	7.
2.Slate	5.Wood	8.
3.Metal	6.Other	9.
SF Masonry Trim	**0**	
OPEN-3-CUSTOM	**0**	
OPEN-4-CUSTOM	**0**	
Year Built	**1978**	
Year Remodeled	**0**	
Foundation	**1 Concrete**	
1.Concrete	4.Wood	7.
2.C Block	5.Slab	8.
3.Br/Stone	6.Piers	9.
Basement	**4 Full Basement**	
1.1/4 Bmt	4.Full Bmt	7.
2.1/2 Bmt	5.None	8.
3.3/4 Bmt	6.	9.None
Bsmt Gar # Cars	**0**	
Wet Basement	**1 Dry Basement**	
1.Dry	4.	7.
2.Damp	5.	8.
3.Wet	6.	9.

SF Bsmt Living	**0**	
Fin Bsmt Grade	**0 0**	
OPEN-5-CUSTOMIZE	**0**	
Heat Type	**100% 5 Forced Warm Air**	
0.Uncoded	4.Steam	8.Fl/Wall
1.HWBB	5.FWA	9.No Heat
2.HWCI	6.GravWA	10.Radiabt
3.H Pump	7.Electric	12.
Cool Type	**100% 9 None**	
1.Refrig	4.W&C Air	7.
2.Evapor	5.	8.
3.H Pump	6.	9.None
Kitchen Style	**2 Typical**	
1.Modern	4.Obsolete	7.
2.Typical	5.	8.
3.Old Type	6.	9.None
Bath(s) Style	**2 Typical Bath(s)**	
1.Modern	4.Obsolete	7.
2.Typical	5.	8.
3.Old Type	6.	9.None
# Rooms	**5**	
# Bedrooms	**3**	
# Full Baths	**1**	
# Half Baths	**0**	
# Addn Fixtures	**0**	
# Fireplaces	**0**	

TRIO Software
A Division of Harris Computer Systems

Layout	**1 Typical**	
1.Typical	4.	7.
2.Inadeq	5.	8.
3.Horrid	6.	9.
Attic	**9 None**	
1.1/4 Fin	4.Full Fin	7.
2.1/2 Fin	5.Fl/Stair	8.
3.3/4 Fin	6.	9.None
Insulation	**1 Full**	
1.Full	4.Minimal	7.
2.Heavy	5.Partial	8.
3.Capped	6.	9.None
Unfinished %	**0%**	
Grade & Factor	**3 Average 100%**	
1.E Grade	4.B Grade	7.AAA Grad
2.D Grade	5.A Grade	8.SC Grade
3.C Grade	6.AA Grade	9.Same
SQFT (Footprint)	**720**	
Condition	**4 Average**	
1.Poor	4.Avg	7.V G
2.Fair	5.Avg+	8.Exc
3.Avg-	6.Good	9.Same
Phys. % Good	**0%**	
Funct. % Good	**95%**	
Functional Code	**6 2014 ADJUSTMENT**	
1.Incomp	4.Delap	7.Seasonal
2.O-Built	5.Bsmt	8.
3.Fire	6.2014 ADJ	9.None
Econ. % Good	**100%**	
Economic Code	**None**	
0.None	3.No Power	7.
1.Location	4.Generate	8.
2.Encroach	9.None	9.
Entrance Code	**0**	
1.Interior	4.Vacant	7.
2.Refusal	5.Estimate	8.
3.Informed	6.	9.
Information Code	**0**	
1.Owner	4.Agent	7.
2.Relative	5.Estimate	8.
3.Tenant	6.Other	9.

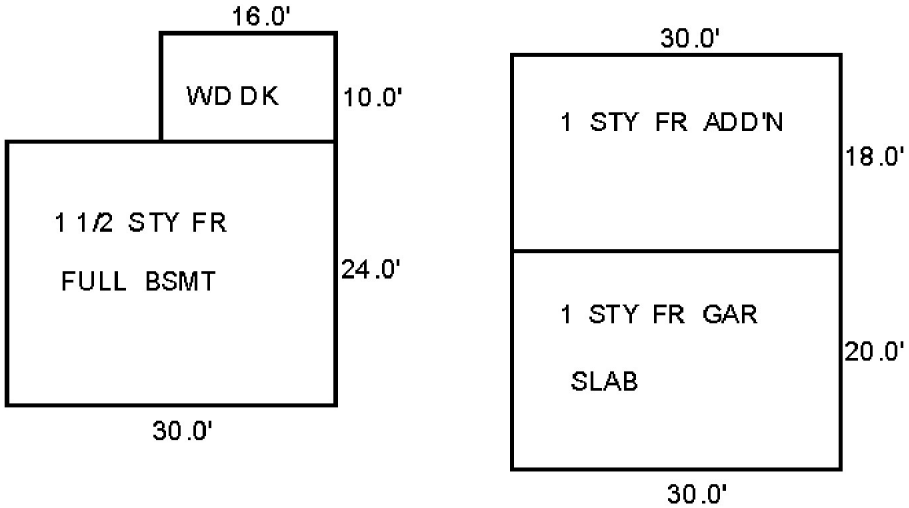

Date Inspected

Additions, Outbuildings & Improvements

Type	Year	Units	Grade	Cond	Phys.	Funct.	Sound Value
81 1 SF GARAGE	0	1140	0 0	0	0 %	0 %	
68 Wood Deck	0	160	0 0	0	0 %	0 %	
					%	%	
					%	%	
					%	%	
					%	%	
					%	%	
					%	%	
					%	%	
					%	%	

1.One Story Fram
2.Two Story Fram
3.Three Story Fr
4.1 & 1/2 Story
5.1 & 3/4 Story
6.2 & 1/2 Story
21.Open Frame Por
22.Encl Frame Por
23.Frame Garage
24.Frame Shed
25.Frame Bay Wind
26.1SFr Overhang
27.Unfin Basement
28.Unfinished Att
29.Finished Attic

Map Lot 110-014 Account 140 Location 642 EASTSIDE ROAD Card 1 Of 1 10/01/2020

COLBY, SONJA W
SANBORN, TARNYA O
PO BOX 394
HANCOCK ME 04640

B4849P323 B6711P16 B6907P395

Previous Owner
LEAVITT, MAURICE C., JR.
37400 ST. LOUIS AVE.

UMATILLA FL 32784
Sale Date: 1/31/2017

Previous Owner
BRAZIER, FANNIE J., ESTATE OF
c/o HOWARD, JUDITH
51 HIGGINS HILL RD
MORRILL ME 04952
Sale Date: 9/12/2007

Inspection Witnessed By:

X Date

No./Date	Description	Date Insp.

Notes:

Property Data

Neighborhood **18 Neighborhood 18**

Tree Growth Year **0**

TREE GROWTH RECERTIFY **0**

STATE SALE CODE **0**

Zone/Land Use **11 Residential**

Secondary Zone

Topography **9** **9**

1.Level 4.Below St 7.
2.Rolling 5.Low 8.
3.Above St 6.Swampy 9.

Utilities **9 None** **9 None**

1.Public 4.Dr Well 7.Cesspool
2.Water 5.Dug Well 8.
3.Sewer 6.Septic 9.None

Street **9 None**

1.Paved 4.Proposed 7.
2.Semi Imp 5. 8.
3.Gravel 6. 9.None

REVIEW STRUCTURE YEAR **0**

RENTAL? 0=NO 1=YES **0**

Sale Data

Sale Date **1/31/2017**

Price **158,000**

Sale Type **2 Land & Buildings**

1.Land 4.Mobile 7.
2.L & B 5.Other 8.
3.Building 6. 9.

Financing **9 Unknown**

1.Convent 4.Seller 7.
2.FHA/VA 5.Private 8.
3.Assumed 6.Cash 9.Unknown

Validity **1 Arms Length Sale**

1.Valid 4.Split 7.Changes
2.Related 5.Partial 8.Other
3.Distress 6.Exempt 9.Fr Ffclse

Verified **5 Public Record**

1.Buyer 4.Agent 7.Family
2.Seller 5.Pub Rec 8.Other
3.Lender 6.MLS 9.

Assessment Record

Year	Land	Buildings	Exempt	Total
2007	55,000	50,700	13,000	92,700
2008	55,000	50,600	0	105,600
2009	55,000	50,600	0	105,600
2010	55,000	50,600	0	105,600
2011	55,000	50,600	0	105,600
2012	55,000	50,600	0	105,600
2013	55,000	50,600	0	105,600
2014	55,000	45,500	0	100,500
2015	55,000	45,500	0	100,500
2016	55,000	45,500	0	100,500
2017	55,000	45,500	0	100,500
2018	55,000	45,500	0	100,500
2019	55,000	45,500	0	100,500
2020	55,000	45,500	25,000	75,500

Land Data

Front Foot	Type	Effective Frontage	Effective Depth	Influence Factor	Influence Code
11.Regular Lot				%	
12.Delta Triangle				%	
13.Nabla Triangle				%	
14.Rear Land				%	
15.Miscellaneous				%	
				%	
				%	
Square Foot		**Square Feet**			
16.Regular Lot				%	
17.Secondary Lot				%	
18.Excess Land				%	
19.Condominium				%	
20.Miscellaneous				%	
				%	
				%	
Fract. Acre		**Acreage/Sites**			
21.Homesite (Frac	21	1.00	100	%	0
22.Baselot (Fract	40	0.40	100	%	0
23.Misc (Fract)	44	1.00	100	%	0
Acres				%	
24.Excess Acres 1				%	
25.Excess Acres 5				%	
26.Excess Acres 2				%	
27.Excess Acres 5				%	
28.Excess Acres 1				%	
29.Excess acres				%	

Total Acreage 1.40

Influence Codes

1.Unimproved
2.Excess Frtg
3.Topography
4.Size/Shape
5.Access
6.Restriction
7.Corner Infl
8.Environment
9.Fract Share
Acres
30.Industrial Sit
31.Working Waterf
32.Cultivated Cro
33.Pasture
34.Softwood (Farm
35.Mixed Wood (Fa
36.Hardwood (Farm
37.Softwood
38.Mixed Wood
39.Hardwood
40.Wasteland
41.Gravel Pit
42.Mobile Home Si
43.Location Base
44.Lot Improvemen
45.Waterfront A
46.Lobster Pound

Hancock 2020

Hancock 2020

Map Lot 110-014 | Account 140 | Location 642 EASTSIDE ROAD | Card 1 Of 1 | 10/01/2020

Building Style	**1 Conventional**	
0.Uncoded	4.Cape	8.Log
1.Conv.	5.Garrison	9.Other
2.Ranch	6.Colonial	10.Dutch C
3.R Ranch	7.Contemp	11.Farmhou
Dwelling Units	**1**	
Other Units	**0**	
Stories	**1 One Story**	
1.1	4.1.5	7.3.5
2.2	5.1.75	8.
3.3	6.2.5	9.
Exterior Walls	**1 Wood Siding**	
0.Uncoded	4.Asbestos	8.Stone
1.Wood	5.Stucco	9.Other
2.Vin/Al	6.Brick Ve	10.Concret
3.Compos.	7.Solid Br	12.
Roof Surface	**1 Asphalt Shingles**	
1.Asphalt	4.Composit	7.
2.Slate	5.Wood	8.
3.Metal	6.Other	9.
SF Masonry Trim	**0**	
OPEN-3-CUSTOM	**0**	
OPEN-4-CUSTOM	**0**	
Year Built	**1924**	
Year Remodeled	**0**	
Foundation	**1 Concrete**	
1.Concrete	4.Wood	7.
2.C Block	5.Slab	8.
3.Br/Stone	6.Piers	9.
Basement	**2 1/2 Basement**	
1.1/4 Bmt	4.Full Bmt	7.
2.1/2 Bmt	5.None	8.
3.3/4 Bmt	6.	9.None
Bsmt Gar # Cars	**0**	
Wet Basement	**1 Dry Basement**	
1.Dry	4.	7.
2.Damp	5.	8.
3.Wet	6.	9.

SF Bsmt Living	**0**	
Fin Bsmt Grade	**0 0**	
OPEN-5-CUSTOMIZE	**0**	
Heat Type	**100%**	**5 Forced Warm Air**
0.Uncoded	4.Steam	8.Fl/Wall
1.HWBB	5.FWA	9.No Heat
2.HWCI	6.GravWA	10.Radiabt
3.H Pump	7.Electric	12.
Cool Type	**100%**	**9 None**
1.Refrig	4.W&C Air	7.
2.Evapor	5.	8.
3.H Pump	6.	9.None
Kitchen Style	**2 Typical**	
1.Modern	4.Obsolete	7.
2.Typical	5.	8.
3.Old Type	6.	9.None
Bath(s) Style	**3 Old Style**	
1.Modern	4.Obsolete	7.
2.Typical	5.	8.
3.Old Type	6.	9.None
# Rooms	**4**	
# Bedrooms	**2**	
# Full Baths	**1**	
# Half Baths	**0**	
# Addn Fixtures	**1**	
# Fireplaces	**0**	

TRIO Software
A Division of Harris Computer Systems

Layout	**1 Typical**	
1.Typical	4.	7.
2.Inadeq	5.	8.
3.Horrid	6.	9.
Attic	**1 1/4 Finished**	
1.1/4 Fin	4.Full Fin	7.
2.1/2 Fin	5.Fl/Stair	8.
3.3/4 Fin	6.	9.None
Insulation	**5 Partial**	
1.Full	4.Minimal	7.
2.Heavy	5.Partial	8.
3.Capped	6.	9.None
Unfinished %	**0%**	
Grade & Factor	**3 Average 100%**	
1.E Grade	4.B Grade	7.AAA Grad
2.D Grade	5.A Grade	8.SC Grade
3.C Grade	6.AA Grade	9.Same
SQFT (Footprint)	**766**	
Condition	**4 Average**	
1.Poor	4.Avg	7.V G
2.Fair	5.Avg+	8.Exc
3.Avg-	6.Good	9.Same
Phys. % Good	**0%**	
Funct. % Good	**90%**	
Functional Code	**6 2014 ADJUSTMENT**	
1.Incomp	4.Delap	7.Seasonal
2.O-Built	5.Bsmt	8.
3.Fire	6.2014 ADJ	9.None
Econ. % Good	**100%**	
Economic Code	**None**	
0.None	3.No Power	7.
1.Location	4.Generate	8.
2.Encroach	9.None	9.
Entrance Code	**0**	
1.Interior	4.Vacant	7.
2.Refusal	5.Estimate	8.
3.Informed	6.	9.
Information Code	**0**	
1.Owner	4.Agent	7.
2.Relative	5.Estimate	8.
3.Tenant	6.Other	9.

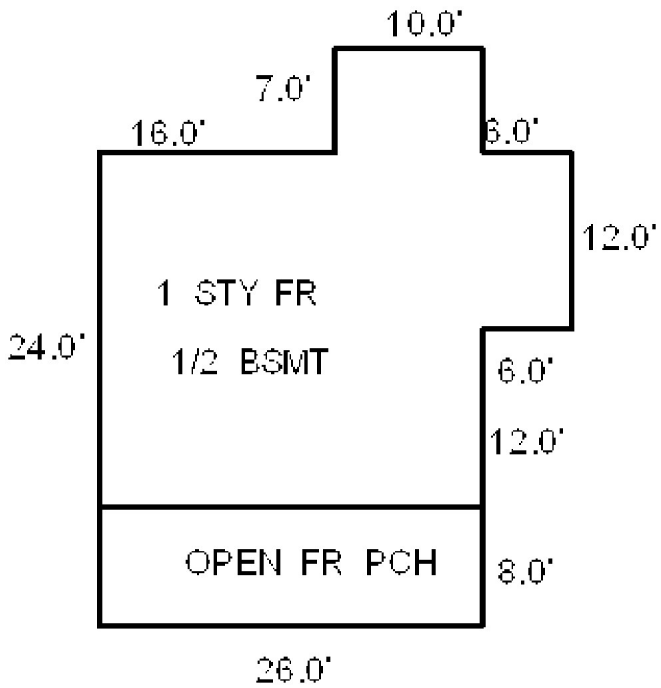

Date Inspected

Additions, Outbuildings & Improvements

Type	Year	Units	Grade	Cond	Phys.	Funct.	Sound Value
21 Open Frame	0	208	0 0	0	0 %	0 %	
					%	%	
					%	%	
					%	%	
					%	%	
					%	%	
					%	%	
					%	%	
					%	%	
					%	%	

1.One Story Fram
2.Two Story Fram
3.Three Story Fr
4.1 & 1/2 Story
5.1 & 3/4 Story
6.2 & 1/2 Story
21.Open Frame Por
22.Encl Frame Por
23.Frame Garage
24.Frame Shed
25.Frame Bay Wind
26.1SFr Overhang
27.Unfin Basement
28.Unfinished Att
29.Finished Attic

Map Lot 110-015 | Account 378 | Location 646 EASTSIDE ROAD | Card 1 Of 1 | 10/01/2020

DOUGAN, ANDREA
DOUGAN, GARY
P O BOX 224
HANCOCK ME 04640

B1289P312

Property Data

Neighborhood **18 Neighborhood 18**

Tree Growth Year **0**

TREE GROWTH RECERTIFY **0**

STATE SALE CODE **0**

Zone/Land Use **11 Residential**

Secondary Zone

Topography **9** **9**

1.Level 4.Below St 7.
2.Rolling 5.Low 8.
3.Above St 6.Swampy 9.

Utilities **9 None** **9 None**

1.Public 4.Dr Well 7.Cesspool
2.Water 5.Dug Well 8.
3.Sewer 6.Septic 9.None

Street **1 Paved**

1.Paved 4.Proposed 7.
2.Semi Imp 5. 8.
3.Gravel 6. 9.None

REVIEW STRUCTURE YEAR **0**

RENTAL? 0=NO 1=YES **0**

Sale Data

Sale Date

Price

Sale Type

1.Land 4.Mobile 7.
2.L & B 5.Other 8.
3.Building 6. 9.

Financing

1.Convent 4.Seller 7.
2.FHA/VA 5.Private 8.
3.Assumed 6.Cash 9.Unknown

Validity

1.Valid 4.Split 7.Changes
2.Related 5.Partial 8.Other
3.Distress 6.Exempt 9.Fr Ffclse

Verified

1.Buyer 4.Agent 7.Family
2.Seller 5.Pub Rec 8.Other
3.Lender 6.MLS 9.

Assessment Record

Year	Land	Buildings	Exempt	Total
2007	57,200	49,400	18,000	88,600
2008	57,200	49,400	19,000	87,600
2009	57,200	49,400	19,000	87,600
2010	57,200	49,400	16,000	90,600
2011	57,200	49,400	16,000	90,600
2012	57,200	52,300	16,000	93,500
2013	57,200	52,300	16,000	93,500
2014	57,200	47,800	17,280	87,720
2015	57,200	47,800	17,600	87,400
2016	57,200	47,800	23,100	81,900
2017	57,200	47,800	28,600	76,400
2018	57,200	47,800	28,600	76,400
2019	57,200	47,800	28,600	76,400
2020	57,200	47,800	31,000	74,000

Land Data

Front Foot	Type	Effective Frontage	Effective Depth	Influence Factor	Influence Code
11.Regular Lot				%	
12.Delta Triangle				%	
13.Nabla Triangle				%	
14.Rear Land				%	
15.Miscellaneous				%	
				%	
				%	
Square Foot		**Square Feet**			
16.Regular Lot				%	
17.Secondary Lot				%	
18.Excess Land				%	
19.Condominium				%	
20.Miscellaneous				%	
				%	
				%	
Fract. Acre		**Acreage/Sites**			
21.Homesite (Frac	21	1.00		100 %	0
22.Baselot (Fract	24	1.80		100 %	0
23.Misc (Fract)	44	1.00		100 %	0
Acres				%	
24.Excess Acres 1				%	
25.Excess Acres 5				%	
26.Excess Acres 2				%	
27.Excess Acres 5				%	
28.Excess Acres 1				%	
29.Excess acres				%	

Total Acreage 2.80

Influence Codes

1.Unimproved
2.Excess Frtg
3.Topography
4.Size/Shape
5.Access
6.Restriction
7.Corner Infl
8.Environment
9.Fract Share
Acres
30.Industrial Sit
31.Working Waterf
32.Cultivated Cro
33.Pasture
34.Softwood (Farm
35.Mixed Wood (Fa
36.Hardwood (Farm
37.Softwood
38.Mixed Wood
39.Hardwood
40.Wasteland
41.Gravel Pit
42.Mobile Home Si
43.Location Base
44.Lot Improvemen
45.Waterfront A
46.Lobster Pound

Inspection Witnessed By:

X Date

No./Date	Description	Date Insp.

Notes:

Hancock 2020

Hancock 2020

Map Lot 110-015 | Account 378 | Location 646 EASTSIDE ROAD | Card 1 Of 1 | 10/01/2020

Building Style	**1 Conventional**	
0.Uncoded	4.Cape	8.Log
1.Conv.	5.Garrison	9.Other
2.Ranch	6.Colonial	10.Dutch C
3.R Ranch	7.Contemp	11.Farmhou
Dwelling Units	**1**	
Other Units	**0**	
Stories	**1 One Story**	
1.1	4.1.5	7.3.5
2.2	5.1.75	8.
3.3	6.2.5	9.
Exterior Walls	**2 Vinyl/Aluminum**	
0.Uncoded	4.Asbestos	8.Stone
1.Wood	5.Stucco	9.Other
2.Vin/Al	6.Brick Ve	10.Concret
3.Compos.	7.Solid Br	12.
Roof Surface	**1 Asphalt Shingles**	
1.Asphalt	4.Composit	7.
2.Slate	5.Wood	8.
3.Metal	6.Other	9.
SF Masonry Trim	**0**	
OPEN-3-CUSTOM	**0**	
OPEN-4-CUSTOM	**0**	
Year Built	**1860**	
Year Remodeled	**0**	
Foundation	**6 Piers**	
1.Concrete	4.Wood	7.
2.C Block	5.Slab	8.
3.Br/Stone	6.Piers	9.
Basement	**9 No Basement**	
1.1/4 Bmt	4.Full Bmt	7.
2.1/2 Bmt	5.None	8.
3.3/4 Bmt	6.	9.None
Bsmt Gar # Cars	**0**	
Wet Basement	**9 No Basement**	
1.Dry	4.	7.
2.Damp	5.	8.
3.Wet	6.	9.

SF Bsmt Living	**0**	
Fin Bsmt Grade	**0 0**	
OPEN-5-CUSTOMIZE	**0**	
Heat Type	**100%**	**1 Hot Water BB**
0.Uncoded	4.Steam	8.Fl/Wall
1.HWBB	5.FWA	9.No Heat
2.HWCI	6.GravWA	10.Radiabt
3.H Pump	7.Electric	12.
Cool Type	**100%**	**9 None**
1.Refrig	4.W&C Air	7.
2.Evapor	5.	8.
3.H Pump	6.	9.None
Kitchen Style	**2 Typical**	
1.Modern	4.Obsolete	7.
2.Typical	5.	8.
3.Old Type	6.	9.None
Bath(s) Style	**2 Typical Bath(s)**	
1.Modern	4.Obsolete	7.
2.Typical	5.	8.
3.Old Type	6.	9.None
# Rooms	**4**	
# Bedrooms	**2**	
# Full Baths	**1**	
# Half Baths	**0**	
# Addn Fixtures	**0**	
# Fireplaces	**0**	

TRIO Software
A Division of Harris Computer Systems

Layout	**1 Typical**	
1.Typical	4.	7.
2.Inadeq	5.	8.
3.Horrid	6.	9.
Attic	**2 1/2 Finished**	
1.1/4 Fin	4.Full Fin	7.
2.1/2 Fin	5.Fl/Stair	8.
3.3/4 Fin	6.	9.None
Insulation	**9 None**	
1.Full	4.Minimal	7.
2.Heavy	5.Partial	8.
3.Capped	6.	9.None
Unfinished %	**0%**	
Grade & Factor	**3 Average 90%**	
1.E Grade	4.B Grade	7.AAA Grad
2.D Grade	5.A Grade	8.SC Grade
3.C Grade	6.AA Grade	9.Same
SQFT (Footprint)	**500**	
Condition	**5 Above Average**	
1.Poor	4.Avg	7.V G
2.Fair	5.Avg+	8.Exc
3.Avg-	6.Good	9.Same
Phys. % Good	**0%**	
Funct. % Good	**90%**	
Functional Code	**6 2014 ADJUSTMENT**	
1.Incomp	4.Delap	7.Seasonal
2.O-Built	5.Bsmt	8.
3.Fire	6.2014 ADJ	9.None
Econ. % Good	**100%**	
Economic Code	**None**	
0.None	3.No Power	7.
1.Location	4.Generate	8.
2.Encroach	9.None	9.
Entrance Code	**0**	
1.Interior	4.Vacant	7.
2.Refusal	5.Estimate	8.
3.Informed	6.	9.
Information Code	**0**	
1.Owner	4.Agent	7.
2.Relative	5.Estimate	8.
3.Tenant	6.Other	9.

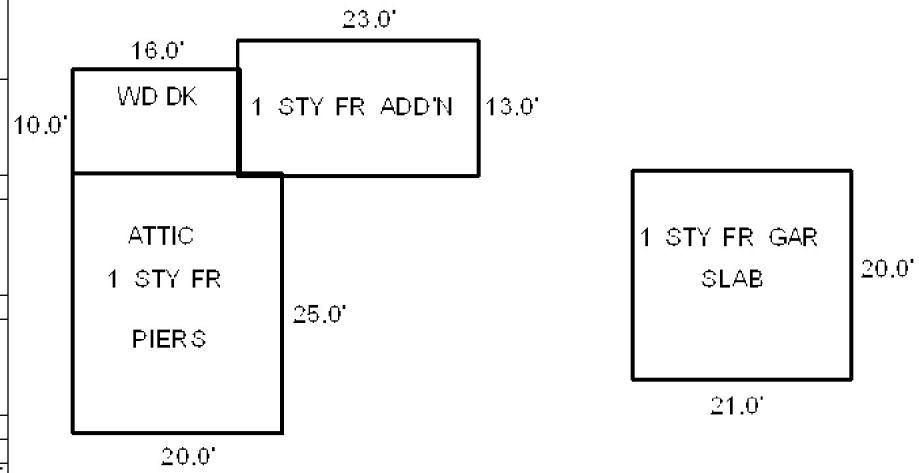

Date Inspected

Additions, Outbuildings & Improvements

Type	Year	Units	Grade	Cond	Phys.	Funct.	Sound Value
81 1 SF GARAGE	2012	420	3 100	4	0 %	100 %	
68 Wood Deck	0	160	0 0	0	0 %	0 %	
1 One Story Frame	0	299	0 0	0	0 %	0 %	
					%	%	
					%	%	
					%	%	
					%	%	
					%	%	
					%	%	
					%	%	

1.One Story Fram
2.Two Story Fram
3.Three Story Fr
4.1 & 1/2 Story
5.1 & 3/4 Story
6.2 & 1/2 Story
21.Open Frame Por
22.Encl Frame Por
23.Frame Garage
24.Frame Shed
25.Frame Bay Wind
26.1SFr Overhang
27.Unfin Basement
28.Unfinished Att
29.Finished Attic

Map Lot 110-016 Account 239 Location 49 BELL BUOY SOUND Card 1 Of 1 10/01/2020

BUTLER, ERNEST, JR & MARJORIE
267 EAST SIDE ROAD
HANCOCK ME 04640

B1760P18 B4527P299

Previous Owner
PENDERGIST, BRENDA
547 MARIAVILLE ROAD

ELLSWORTH ME 04605
Sale Date: 6/29/2006

Inspection Witnessed By:

X Date

No./Date	Description	Date Insp.

Notes:
2020 - % UNFINISHED FROM 50 TO 25 - ADDED GARAGE W/CARPORT, 10X10 SHED WITH PORCH

Hancock 2020

Property Data

Neighborhood **18 Neighborhood 18**

Tree Growth Year **0**

TREE GROWTH RECERTIFY **0**

STATE SALE CODE **0**

Zone/Land Use **11 Residential**

Secondary Zone

Topography **9** **9**

1.Level 4.Below St 7.
2.Rolling 5.Low 8.
3.Above St 6.Swampy 9.

Utilities **9 None** **9 None**

1.Public 4.Dr Well 7.Cesspool
2.Water 5.Dug Well 8.
3.Sewer 6.Septic 9.None

Street **9 None**

1.Paved 4.Proposed 7.
2.Semi Imp 5. 8.
3.Gravel 6. 9.None

REVIEW STRUCTURE YEAR **2008**

RENTAL? 0=NO 1=YES **0**

Sale Data

Sale Date

Price

Sale Type

1.Land 4.Mobile 7.
2.L & B 5.Other 8.
3.Building 6. 9.

Financing

1.Convent 4.Seller 7.
2.FHA/VA 5.Private 8.
3.Assumed 6.Cash 9.Unknown

Validity

1.Valid 4.Split 7.Changes
2.Related 5.Partial 8.Other
3.Distress 6.Exempt 9.Fr Ffclse

Verified

1.Buyer 4.Agent 7.Family
2.Seller 5.Pub Rec 8.Other
3.Lender 6.MLS 9.

Assessment Record

Year	Land	Buildings	Exempt	Total
2007	75,000	0	0	75,000
2008	89,000	0	0	89,000
2009	89,000	0	0	89,000
2010	89,000	0	0	89,000
2011	89,000	0	0	89,000
2012	86,700	0	0	86,700
2013	86,700	0	0	86,700
2014	86,700	0	0	86,700
2015	86,700	122,800	0	209,500
2016	86,700	189,100	0	275,800
2017	78,600	198,500	0	277,100
2018	58,600	0	0	58,600
2019	58,600	0	0	58,600
2020	58,600	56,200	0	114,800

Land Data

Front Foot	Type	Effective Frontage	Effective Depth	Influence Factor	Influence Code
11.Regular Lot				%	
12.Delta Triangle				%	
13.Nabla Triangle				%	
14.Rear Land				%	
15.Miscellaneous				%	
				%	
				%	
Square Foot		**Square Feet**			
16.Regular Lot				%	
17.Secondary Lot				%	
18.Excess Land				%	
19.Condominium				%	
20.Miscellaneous				%	
				%	
				%	
Fract. Acre		**Acreage/Sites**			
21.Homesite (Frac	21	1.00	100	%	0
22.Baselot (Fract	24	4.00	100	%	0
23.Misc (Fract)	25	3.42	100	%	0
Acres	40	2.00	100	%	0
24.Excess Acres 1				%	
25.Excess Acres 5				%	
26.Excess Acres 2				%	
27.Excess Acres 5					
28.Excess Acres 1					
29.Excess acres					

Total Acreage 10.42

Influence Codes

1.Unimproved
2.Excess Frtg
3.Topography
4.Size/Shape
5.Access
6.Restriction
7.Corner Infl
8.Environment
9.Fract Share
Acres
30.Industrial Sit
31.Working Waterf
32.Cultivated Cro
33.Pasture
34.Softwood (Farm
35.Mixed Wood (Fa
36.Hardwood (Farm
37.Softwood
38.Mixed Wood
39.Hardwood
40.Wasteland
41.Gravel Pit
42.Mobile Home Si
43.Location Base
44.Lot Improvemen
45.Waterfront A
46.Lobster Pound

Hancock 2020

Map Lot 110-016 | Account 239 | Location 49 BELL BUOY SOUND | Card 1 Of 1 | 10/01/2020

Building Style **1 Conventional**		
0.Uncoded	4.Cape	8.Log
1.Conv.	5.Garrison	9.Other
2.Ranch	6.Colonial	10.Dutch C
3.R Ranch	7.Contemp	11.Farmhou
Dwelling Units **1**		
Other Units **0**		
Stories **0**		
1.1	4.1.5	7.3.5
2.2	5.1.75	8.
3.3	6.2.5	9.
Exterior Walls **1 Wood Siding**		
0.Uncoded	4.Asbestos	8.Stone
1.Wood	5.Stucco	9.Other
2.Vin/Al	6.Brick Ve	10.Concret
3.Compos.	7.Solid Br	12.
Roof Surface **1 Asphalt Shingles**		
1.Asphalt	4.Composit	7.
2.Slate	5.Wood	8.
3.Metal	6.Other	9.
SF Masonry Trim **0**		
OPEN-3-CUSTOM **0**		
OPEN-4-CUSTOM **0**		
Year Built **1990**		
Year Remodeled **0**		
Foundation **5 Concrete Slab**		
1.Concrete	4.Wood	7.
2.C Block	5.Slab	8.
3.Br/Stone	6.Piers	9.
Basement **5 Crawl Space**		
1.1/4 Bmt	4.Full Bmt	7.
2.1/2 Bmt	5.None	8.
3.3/4 Bmt	6.	9.None
Bsmt Gar # Cars **0**		
Wet Basement **9 No Basement**		
1.Dry	4.	7.
2.Damp	5.	8.
3.Wet	6.	9.

SF Bsmt Living **0**		
Fin Bsmt Grade **0 0**		
OPEN-5-CUSTOMIZE **0**		
Heat Type **100%** **0 Uncoded**		
0.Uncoded	4.Steam	8.Fl/Wall
1.HWBB	5.FWA	9.No Heat
2.HWCI	6.GravWA	10.Radiabt
3.H Pump	7.Electric	12.
Cool Type **0%** **9 None**		
1.Refrig	4.W&C Air	7.
2.Evapor	5.	8.
3.H Pump	6.	9.None
Kitchen Style **2 Typical**		
1.Modern	4.Obsolete	7.
2.Typical	5.	8.
3.Old Type	6.	9.None
Bath(s) Style **2 Typical Bath(s)**		
1.Modern	4.Obsolete	7.
2.Typical	5.	8.
3.Old Type	6.	9.None
# Rooms **6**		
# Bedrooms **3**		
# Full Baths **2**		
# Half Baths **0**		
# Addn Fixtures **0**		
# Fireplaces **0**		

TRIO Software
A Division of Harris Computer Systems

Layout **2 Inadequate**		
1.Typical	4.	7.
2.Inadeq	5.	8.
3.Horrid	6.	9.
Attic **9 None**		
1.1/4 Fin	4.Full Fin	7.
2.1/2 Fin	5.Fl/Stair	8.
3.3/4 Fin	6.	9.None
Insulation **4 Minimal**		
1.Full	4.Minimal	7.
2.Heavy	5.Partial	8.
3.Capped	6.	9.None
Unfinished % **25%**		
Grade & Factor **2 Fair 80%**		
1.E Grade	4.B Grade	7.AAA Grad
2.D Grade	5.A Grade	8.SC Grade
3.C Grade	6.AA Grade	9.Same
SQFT (Footprint) **1344**		
Condition **2 Fair**		
1.Poor	4.Avg	7.V G
2.Fair	5.Avg+	8.Exc
3.Avg-	6.Good	9.Same
Phys. % Good **0%**		
Funct. % Good **90%**		
Functional Code **1 Incomplete**		
1.Incomp	4.Delap	7.Seasonal
2.O-Built	5.Bsmt	8.
3.Fire	6.2014 ADJ	9.None
Econ. % Good **100%**		
Economic Code **None**		
0.None	3.No Power	7.
1.Location	4.Generate	8.
2.Encroach	9.None	9.
Entrance Code **0**		
1.Interior	4.Vacant	7.
2.Refusal	5.Estimate	8.
3.Informed	6.	9.
Information Code **0**		
1.Owner	4.Agent	7.
2.Relative	5.Estimate	8.
3.Tenant	6.Other	9.

Date Inspected

Additions, Outbuildings & Improvements

Type	Year	Units	Grade	Cond	Phys.	Funct.	Sound Value
23 Frame Garage	2019	532	3 100	4	0 %	100 %	
62 Carport (Gable)	2019	532	3 100	4	0 %	50 %	
24 Frame Shed	2019	100	3 100	4	0 %	100 %	
21 Open Frame	2019	40	3 100	4	0 %	100 %	
					%	%	
					%	%	
					%	%	
					%	%	
					%	%	
					%	%	

1.One Story Fram
2.Two Story Fram
3.Three Story Fr
4.1 & 1/2 Story
5.1 & 3/4 Story
6.2 & 1/2 Story
21.Open Frame Por
22.Encl Frame Por
23.Frame Garage
24.Frame Shed
25.Frame Bay Wind
26.1SFr Overhang
27.Unfin Basement
28.Unfinished Att
29.Finished Attic

Map Lot 110-016-001 Account 2151 Location BELL BUOY SOUND Card 1 Of 1 10/01/2020

COOPER, STEVEN
COOPER, LAURA
11 AGREEN WAY
HANCOCK ME 04640

B5665P105

Property Data

Neighborhood **18 Neighborhood 18**

Tree Growth Year **0**

TREE GROWTH RECERTIFY **0**

STATE SALE CODE **0**

Zone/Land Use **11 Residential**

Secondary Zone

Topography **2 Rolling**

1.Level	4.Below St	7.
2.Rolling	5.Low	8.
3.Above St	6.Swampy	9.

Utilities

1.Public	4.Dr Well	7.Cesspool
2.Water	5.Dug Well	8.
3.Sewer	6.Septic	9.None

Street **9 None**

1.Paved	4.Proposed	7.
2.Semi Imp	5.	8.
3.Gravel	6.	9.None

REVIEW STRUCTURE YEAR **0**

RENTAL? 0=NO 1=YES **0**

Sale Data

Sale Date **8/15/2011**

Price **27,000**

Sale Type **1 Land Only**

1.Land	4.Mobile	7.
2.L & B	5.Other	8.
3.Building	6.	9.

Financing **9 Unknown**

1.Convent	4.Seller	7.
2.FHA/VA	5.Private	8.
3.Assumed	6.Cash	9.Unknown

Validity **1 Arms Length Sale**

1.Valid	4.Split	7.Changes
2.Related	5.Partial	8.Other
3.Distress	6.Exempt	9.Fr Ffclse

Verified **5 Public Record**

1.Buyer	4.Agent	7.Family
2.Seller	5.Pub Rec	8.Other
3.Lender	6.MLS	9.

Assessment Record

Year	Land	Buildings	Exempt	Total
2012	28,900	0	0	28,900
2013	28,900	0	0	28,900
2014	28,900	0	0	28,900
2015	28,900	0	0	28,900
2016	28,900	0	0	28,900
2017	28,900	2,700	0	31,600
2018	28,900	2,700	0	31,600
2019	28,900	2,700	0	31,600
2020	28,900	2,700	0	31,600

Land Data

Front Foot	Type	Effective Frontage	Effective Depth	Influence Factor	Influence Code
11.Regular Lot				%	
12.Delta Triangle				%	
13.Nabla Triangle				%	
14.Rear Land				%	
15.Miscellaneous				%	
				%	
				%	
Square Foot		**Square Feet**			
16.Regular Lot				%	
17.Secondary Lot				%	
18.Excess Land				%	
19.Condominium				%	
20.Miscellaneous				%	
				%	
				%	
Fract. Acre		**Acreage/Sites**			
21.Homesite (Frac	21	1.00	70	%	5
22.Baselot (Fract	24	1.03	70	%	5
23.Misc (Fract)				%	
Acres				%	
24.Excess Acres 1				%	
25.Excess Acres 5				%	
26.Excess Acres 2				%	
27.Excess Acres 5				%	
28.Excess Acres 1				%	
29.Excess acres				%	

Total Acreage 2.03

Influence Codes

1.Unimproved
2.Excess Frtg
3.Topography
4.Size/Shape
5.Access
6.Restriction
7.Corner Infl
8.Environment
9.Fract Share
Acres
30.Industrial Sit
31.Working Waterf
32.Cultivated Cro
33.Pasture
34.Softwood (Farm
35.Mixed Wood (Fa
36.Hardwood (Farm
37.Softwood
38.Mixed Wood
39.Hardwood
40.Wasteland
41.Gravel Pit
42.Mobile Home Si
43.Location Base
44.Lot Improvemen
45.Waterfront A
46.Lobster Pound

Inspection Witnessed By:

X Date

No./Date	Description	Date Insp.

Notes:

Hancock 2020

Hancock 2020

Map Lot 110-016-001 | Account 2151 | Location BELL BUOY SOUND | Card 1 Of 1 | 10/01/2020

Building Style		
0.Uncoded	4.Cape	8.Log
1.Conv.	5.Garrison	9.Other
2.Ranch	6.Colonial	10.Dutch C
3.R Ranch	7.Contemp	11.Farmhou

Dwelling Units
Other Units

Stories		
1.1	4.1.5	7.3.5
2.2	5.1.75	8.
3.3	6.2.5	9.

Exterior Walls		
0.Uncoded	4.Asbestos	8.Stone
1.Wood	5.Stucco	9.Other
2.Vin/Al	6.Brick Ve	10.Concret
3.Compos.	7.Solid Br	12.

Roof Surface		
1.Asphalt	4.Composit	7.
2.Slate	5.Wood	8.
3.Metal	6.Other	9.

SF Masonry Trim
OPEN-3-CUSTOM
OPEN-4-CUSTOM
Year Built
Year Remodeled

Foundation		
1.Concrete	4.Wood	7.
2.C Block	5.Slab	8.
3.Br/Stone	6.Piers	9.

Basement		
1.1/4 Bmt	4.Full Bmt	7.
2.1/2 Bmt	5.None	8.
3.3/4 Bmt	6.	9.None

Bsmt Gar # Cars

Wet Basement		
1.Dry	4.	7.
2.Damp	5.	8.
3.Wet	6.	9.

SF Bsmt Living
Fin Bsmt Grade
OPEN-5-CUSTOMIZE

Heat Type **100%**		
0.Uncoded	4.Steam	8.Fl/Wall
1.HWBB	5.FWA	9.No Heat
2.HWCI	6.GravWA	10.Radiabt
3.H Pump	7.Electric	12.

Cool Type **0%**		
1.Refrig	4.W&C Air	7.
2.Evapor	5.	8.
3.H Pump	6.	9.None

Kitchen Style		
1.Modern	4.Obsolete	7.
2.Typical	5.	8.
3.Old Type	6.	9.None

Bath(s) Style		
1.Modern	4.Obsolete	7.
2.Typical	5.	8.
3.Old Type	6.	9.None

Rooms
Bedrooms
Full Baths
Half Baths
Addn Fixtures
Fireplaces

TRIO Software
A Division of Harris Computer Systems

Layout		
1.Typical	4.	7.
2.Inadeq	5.	8.
3.Horrid	6.	9.

Attic		
1.1/4 Fin	4.Full Fin	7.
2.1/2 Fin	5.Fl/Stair	8.
3.3/4 Fin	6.	9.None

Insulation		
1.Full	4.Minimal	7.
2.Heavy	5.Partial	8.
3.Capped	6.	9.None

Unfinished %

Grade & Factor		
1.E Grade	4.B Grade	7.AAA Grad
2.D Grade	5.A Grade	8.SC Grade
3.C Grade	6.AA Grade	9.Same

SQFT (Footprint)

Condition		
1.Poor	4.Avg	7.V G
2.Fair	5.Avg+	8.Exc
3.Avg-	6.Good	9.Same

Phys. % Good
Funct. % Good

Functional Code		
1.Incomp	4.Delap	7.Seasonal
2.O-Built	5.Bsmt	8.
3.Fire	6.2014 ADJ	9.None

Econ. % Good

Economic Code		
0.None	3.No Power	7.
1.Location	4.Generate	8.
2.Encroach	9.None	9.

Entrance Code **0**		
1.Interior	4.Vacant	7.
2.Refusal	5.Estimate	8.
3.Informed	6.	9.

Information Code **0**		
1.Owner	4.Agent	7.
2.Relative	5.Estimate	8.
3.Tenant	6.Other	9.

Date Inspected

Additions, Outbuildings & Improvements

Type	Year	Units	Grade	Cond	Phys.	Funct.	Sound Value
24 Frame Shed	2016	160	5 100	4	0 %	100 %	
					%	%	
					%	%	
					%	%	
					%	%	
					%	%	
					%	%	
					%	%	
					%	%	
					%	%	

1.One Story Fram
2.Two Story Fram
3.Three Story Fr
4.1 & 1/2 Story
5.1 & 3/4 Story
6.2 & 1/2 Story
21.Open Frame Por
22.Encl Frame Por
23.Frame Garage
24.Frame Shed
25.Frame Bay Wind
26.1SFr Overhang
27.Unfin Basement
28.Unfinished Att
29.Finished Attic

Map Lot 110-016-002 Account 2199 Location 23 BELL BUOY SOUND Card 1 Of 1 10/01/2020

DANICO, MARK
DANICO, MARY
23 BELL BUOY SOUND
HANCOCK ME 04640

B6532P327

Previous Owner
BUTLER, ERNEST, JR & MARJORIE
221 EAST SIDE ROAD

HANCOCK ME 04640
Sale Date: 3/01/2016

Inspection Witnessed By:

X Date

No./Date	Description	Date Insp.

Notes:

Property Data

Neighborhood **18 Neighborhood 18**

Tree Growth Year **0**

TREE GROWTH RECERTIFY **0**

STATE SALE CODE **0**

Zone/Land Use **11 Residential**

Secondary Zone

Topography **1 Level** **9**

1.Level 4.Below St 7.
2.Rolling 5.Low 8.
3.Above St 6.Swampy 9.

Utilities **9 None** **9 None**

1.Public 4.Dr Well 7.Cesspool
2.Water 5.Dug Well 8.
3.Sewer 6.Septic 9.None

Street **3 Gravel**

1.Paved 4.Proposed 7.
2.Semi Imp 5. 8.
3.Gravel 6. 9.None

REVIEW STRUCTURE YEAR **2008**

RENTAL? 0=NO 1=YES **0**

Sale Data

Sale Date **3/01/2016**

Price **23,500**

Sale Type **1 Land Only**

1.Land 4.Mobile 7.
2.L & B 5.Other 8.
3.Building 6. 9.

Financing **9 Unknown**

1.Convent 4.Seller 7.
2.FHA/VA 5.Private 8.
3.Assumed 6.Cash 9.Unknown

Validity **1 Arms Length Sale**

1.Valid 4.Split 7.Changes
2.Related 5.Partial 8.Other
3.Distress 6.Exempt 9.Fr Ffclse

Verified **5 Public Record**

1.Buyer 4.Agent 7.Family
2.Seller 5.Pub Rec 8.Other
3.Lender 6.MLS 9.

Assessment Record

Year	Land	Buildings	Exempt	Total
2016	41,200	0	0	41,200
2017	28,800	0	0	28,800
2018	43,800	314,300	0	358,100
2019	43,800	314,300	0	358,100
2020	43,800	314,300	25,000	333,100

Land Data

Front Foot	Type	Effective Frontage	Effective Depth	Influence Factor	Influence Code
11.Regular Lot				%	
12.Delta Triangle				%	
13.Nabla Triangle				%	
14.Rear Land				%	
15.Miscellaneous				%	
				%	
				%	
Square Foot		**Square Feet**			
16.Regular Lot				%	
17.Secondary Lot				%	
18.Excess Land				%	
19.Condominium				%	
20.Miscellaneous				%	
				%	
				%	
Fract. Acre		**Acreage/Sites**			
21.Homesite (Frac	21	1.00	70	%	5
22.Baselot (Fract	24	1.00	70	%	0
23.Misc (Fract)	44	1.00	100	%	0
Acres				%	
24.Excess Acres 1				%	
25.Excess Acres 5				%	
26.Excess Acres 2				%	
27.Excess Acres 5				%	
28.Excess Acres 1				%	
29.Excess acres				%	

Total Acreage 2.00

Influence Codes

1.Unimproved
2.Excess Frtg
3.Topography
4.Size/Shape
5.Access
6.Restriction
7.Corner Infl
8.Environment
9.Fract Share
Acres
30.Industrial Sit
31.Working Waterf
32.Cultivated Cro
33.Pasture
34.Softwood (Farm
35.Mixed Wood (Fa
36.Hardwood (Farm
37.Softwood
38.Mixed Wood
39.Hardwood
40.Wasteland
41.Gravel Pit
42.Mobile Home Si
43.Location Base
44.Lot Improvemen
45.Waterfront A
46.Lobster Pound

Hancock 2020

Hancock 2020

Map Lot 110-016-002 | Account 2199 | Location 23 BELL BUOY SOUND | Card 1 Of 1 | 10/01/2020

Building Style	**1 Conventional**	
0.Uncoded	4.Cape	8.Log
1.Conv.	5.Garrison	9.Other
2.Ranch	6.Colonial	10.Dutch C
3.R Ranch	7.Contemp	11.Farmhou
Dwelling Units	**1**	
Other Units	**0**	
Stories	**2 Two Story**	
1.1	4.1.5	7.3.5
2.2	5.1.75	8.
3.3	6.2.5	9.
Exterior Walls	**1 Wood Siding**	
0.Uncoded	4.Asbestos	8.Stone
1.Wood	5.Stucco	9.Other
2.Vin/Al	6.Brick Ve	10.Concret
3.Compos.	7.Solid Br	12.
Roof Surface	**1 Asphalt Shingles**	
1.Asphalt	4.Composit	7.
2.Slate	5.Wood	8.
3.Metal	6.Other	9.
SF Masonry Trim	**0**	
OPEN-3-CUSTOM	**0**	
OPEN-4-CUSTOM	**0**	
Year Built	**2017**	
Year Remodeled	**0**	
Foundation	**1 Concrete**	
1.Concrete	4.Wood	7.
2.C Block	5.Slab	8.
3.Br/Stone	6.Piers	9.
Basement	**4 Full Basement**	
1.1/4 Bmt	4.Full Bmt	7.
2.1/2 Bmt	5.None	8.
3.3/4 Bmt	6.	9.None
Bsmt Gar # Cars	**0**	
Wet Basement	**1 Dry Basement**	
1.Dry	4.	7.
2.Damp	5.	8.
3.Wet	6.	9.

SF Bsmt Living	**0**	
Fin Bsmt Grade	**0 0**	
OPEN-5-CUSTOMIZE	**0**	
Heat Type	**100%**	**1 Hot Water BB**
0.Uncoded	4.Steam	8.Fl/Wall
1.HWBB	5.FWA	9.No Heat
2.HWCI	6.GravWA	10.Radiabt
3.H Pump	7.Electric	12.
Cool Type	**100%**	**3 Heat Pump**
1.Refrig	4.W&C Air	7.
2.Evapor	5.	8.
3.H Pump	6.	9.None
Kitchen Style	**1 Modern**	
1.Modern	4.Obsolete	7.
2.Typical	5.	8.
3.Old Type	6.	9.None
Bath(s) Style	**1 Modern Bath(s)**	
1.Modern	4.Obsolete	7.
2.Typical	5.	8.
3.Old Type	6.	9.None
# Rooms	**6**	
# Bedrooms	**3**	
# Full Baths	**3**	
# Half Baths	**0**	
# Addn Fixtures	**0**	
# Fireplaces	**0**	

TRIO Software
A Division of Harris Computer Systems

Layout	**1 Typical**	
1.Typical	4.	7.
2.Inadeq	5.	8.
3.Horrid	6.	9.
Attic	**9 None**	
1.1/4 Fin	4.Full Fin	7.
2.1/2 Fin	5.Fl/Stair	8.
3.3/4 Fin	6.	9.None
Insulation	**1 Full**	
1.Full	4.Minimal	7.
2.Heavy	5.Partial	8.
3.Capped	6.	9.None
Unfinished %	**0%**	
Grade & Factor	**4 Good 100%**	
1.E Grade	4.B Grade	7.AAA Grad
2.D Grade	5.A Grade	8.SC Grade
3.C Grade	6.AA Grade	9.Same
SQFT (Footprint)	**1008**	
Condition	**4 Average**	
1.Poor	4.Avg	7.V G
2.Fair	5.Avg+	8.Exc
3.Avg-	6.Good	9.Same
Phys. % Good	**0%**	
Funct. % Good	**100%**	
Functional Code	**9 None**	
1.Incomp	4.Delap	7.Seasonal
2.O-Built	5.Bsmt	8.
3.Fire	6.2014 ADJ	9.None
Econ. % Good	**100%**	
Economic Code	**None**	
0.None	3.No Power	7.
1.Location	4.Generate	8.
2.Encroach	9.None	9.
Entrance Code	**0**	
1.Interior	4.Vacant	7.
2.Refusal	5.Estimate	8.
3.Informed	6.	9.
Information Code	**0**	
1.Owner	4.Agent	7.
2.Relative	5.Estimate	8.
3.Tenant	6.Other	9.

Date Inspected

Additions, Outbuildings & Improvements

Type	Year	Units	Grade	Cond	Phys.	Funct.	Sound Value
23 Frame Garage	0	896	0 0	0	0 %	0 %	
21 Open Frame	0	160	0 0	0	0 %	0 %	
68 Wood Deck	0	24	0 0	0	0 %	0 %	
23 Frame Garage	0	672	3 100	4	0 %	100 %	
					%	%	
					%	%	
					%	%	
					%	%	
					%	%	
					%	%	

1.One Story Fram
2.Two Story Fram
3.Three Story Fr
4.1 & 1/2 Story
5.1 & 3/4 Story
6.2 & 1/2 Story
21.Open Frame Por
22.Encl Frame Por
23.Frame Garage
24.Frame Shed
25.Frame Bay Wind
26.1SFr Overhang
27.Unfin Basement
28.Unfinished Att
29.Finished Attic

Map Lot 110-016-003 Account 2231 Location 48 BELL BOUY SOUND Card 1 Of 1 10/01/2020

KIEF, TIMOTHY J
48 BELL BOUY SOUND
HANCOCK ME 04640

B6805P122

Property Data

Neighborhood **18 Neighborhood 18**

Tree Growth Year **0**

TREE GROWTH RECERTIFY **0**

STATE SALE CODE **0**

Zone/Land Use **11 Residential**

Secondary Zone

Topography

1.Level	4.Below St	7.
2.Rolling	5.Low	8.
3.Above St	6.Swampy	9.

Utilities

1.Public	4.Dr Well	7.Cesspool
2.Water	5.Dug Well	8.
3.Sewer	6.Septic	9.None

Street

1.Paved	4.Proposed	7.
2.Semi Imp	5.	8.
3.Gravel	6.	9.None

REVIEW STRUCTURE YEAR **0**

RENTAL? 0=NO 1=YES **0**

Sale Data

Sale Date

Price

Sale Type

1.Land	4.Mobile	7.
2.L & B	5.Other	8.
3.Building	6.	9.

Financing

1.Convent	4.Seller	7.
2.FHA/VA	5.Private	8.
3.Assumed	6.Cash	9.Unknown

Validity

1.Valid	4.Split	7.Changes
2.Related	5.Partial	8.Other
3.Distress	6.Exempt	9.Fr Ffclse

Verified

1.Buyer	4.Agent	7.Family
2.Seller	5.Pub Rec	8.Other
3.Lender	6.MLS	9.

Assessment Record

Year	Land	Buildings	Exempt	Total
2018	59,800	198,500	0	258,300
2019	59,800	198,500	0	258,300
2020	59,800	198,500	0	258,300

Land Data

Front Foot	Type	Effective Frontage	Effective Depth	Influence Factor	Influence Code
11.Regular Lot				%	
12.Delta Triangle				%	
13.Nabla Triangle				%	
14.Rear Land				%	
15.Miscellaneous				%	
				%	
				%	
Square Foot		**Square Feet**			
16.Regular Lot				%	
17.Secondary Lot				%	
18.Excess Land				%	
19.Condominium				%	
20.Miscellaneous				%	
				%	
				%	
Fract. Acre		**Acreage/Sites**			
21.Homesite (Frac	21	1.00	100	%	0
22.Baselot (Fract	24	4.00	100	%	0
23.Misc (Fract)	44	1.00	100	%	0
Acres				%	
24.Excess Acres 1				%	
25.Excess Acres 5				%	
26.Excess Acres 2				%	
27.Excess Acres 5				%	
28.Excess Acres 1				%	
29.Excess acres				%	

Total Acreage 5.00

Influence Codes

1.Unimproved
2.Excess Frtg
3.Topography
4.Size/Shape
5.Access
6.Restriction
7.Corner Infl
8.Environment
9.Fract Share
Acres
30.Industrial Sit
31.Working Waterf
32.Cultivated Cro
33.Pasture
34.Softwood (Farm
35.Mixed Wood (Fa
36.Hardwood (Farm
37.Softwood
38.Mixed Wood
39.Hardwood
40.Wasteland
41.Gravel Pit
42.Mobile Home Si
43.Location Base
44.Lot Improvemen
45.Waterfront A
46.Lobster Pound

Inspection Witnessed By:

X Date

No./Date	Description	Date Insp.

Notes:

Hancock 2020

Hancock 2020

Map Lot 110-016-003 | Account 2231 | Location 48 BELL BOUY SOUND | Card 1 Of 1 | 10/01/2020

Building Style	**1 Conventional**		
0.Uncoded	4.Cape	8.Log	
1.Conv.	5.Garrison	9.Other	
2.Ranch	6.Colonial	10.Dutch C	
3.R Ranch	7.Contemp	11.Farmhou	
Dwelling Units	**1**		
Other Units	**0**		
Stories	**2 Two Story**		
1.1	4.1.5	7.3.5	
2.2	5.1.75	8.	
3.3	6.2.5	9.	
Exterior Walls	**1 Wood Siding**		
0.Uncoded	4.Asbestos	8.Stone	
1.Wood	5.Stucco	9.Other	
2.Vin/Al	6.Brick Ve	10.Concret	
3.Compos.	7.Solid Br	12.	
Roof Surface	**1 Asphalt Shingles**		
1.Asphalt	4.Composit	7.	
2.Slate	5.Wood	8.	
3.Metal	6.Other	9.	
SF Masonry Trim	**0**		
OPEN-3-CUSTOM	**0**		
OPEN-4-CUSTOM	**0**		
Year Built	**2015**		
Year Remodeled	**0**		
Foundation	**1 Concrete**		
1.Concrete	4.Wood	7.	
2.C Block	5.Slab	8.	
3.Br/Stone	6.Piers	9.	
Basement	**4 Full Basement**		
1.1/4 Bmt	4.Full Bmt	7.	
2.1/2 Bmt	5.None	8.	
3.3/4 Bmt	6.	9.None	
Bsmt Gar # Cars	**0**		
Wet Basement	**1 Dry Basement**		
1.Dry	4.	7.	
2.Damp	5.	8.	
3.Wet	6.	9.	

SF Bsmt Living	**0**		
Fin Bsmt Grade	**0 0**		
OPEN-5-CUSTOMIZE	**0**		
Heat Type	**100%**	**1 Hot Water BB**	
0.Uncoded	4.Steam	8.Fl/Wall	
1.HWBB	5.FWA	9.No Heat	
2.HWCI	6.GravWA	10.Radiabt	
3.H Pump	7.Electric	12.	
Cool Type	**0%**	**9 None**	
1.Refrig	4.W&C Air	7.	
2.Evapor	5.	8.	
3.H Pump	6.	9.None	
Kitchen Style	**2 Typical**		
1.Modern	4.Obsolete	7.	
2.Typical	5.	8.	
3.Old Type	6.	9.None	
Bath(s) Style	**2 Typical Bath(s)**		
1.Modern	4.Obsolete	7.	
2.Typical	5.	8.	
3.Old Type	6.	9.None	
# Rooms	**7**		
# Bedrooms	**3**		
# Full Baths	**2**		
# Half Baths	**1**		
# Addn Fixtures	**0**		
# Fireplaces	**0**		

TRIO Software
A Division of Harris Computer Systems

Layout	**1 Typical**		
1.Typical	4.	7.	
2.Inadeq	5.	8.	
3.Horrid	6.	9.	
Attic	**9 None**		
1.1/4 Fin	4.Full Fin	7.	
2.1/2 Fin	5.Fl/Stair	8.	
3.3/4 Fin	6.	9.None	
Insulation	**1 Full**		
1.Full	4.Minimal	7.	
2.Heavy	5.Partial	8.	
3.Capped	6.	9.None	
Unfinished %	**0%**		
Grade & Factor	**3 Average 100%**		
1.E Grade	4.B Grade	7.AAA Grad	
2.D Grade	5.A Grade	8.SC Grade	
3.C Grade	6.AA Grade	9.Same	
SQFT (Footprint)	**589**		
Condition	**4 Average**		
1.Poor	4.Avg	7.V G	
2.Fair	5.Avg+	8.Exc	
3.Avg-	6.Good	9.Same	
Phys. % Good	**0%**		
Funct. % Good	**100%**		
Functional Code	**9 None**		
1.Incomp	4.Delap	7.Seasonal	
2.O-Built	5.Bsmt	8.	
3.Fire	6.2014 ADJ	9.None	
Econ. % Good	**100%**		
Economic Code	**None**		
0.None	3.No Power	7.	
1.Location	4.Generate	8.	
2.Encroach	9.None	9.	
Entrance Code	**0**		
1.Interior	4.Vacant	7.	
2.Refusal	5.Estimate	8.	
3.Informed	6.	9.	
Information Code	**0**		
1.Owner	4.Agent	7.	
2.Relative	5.Estimate	8.	
3.Tenant	6.Other	9.	

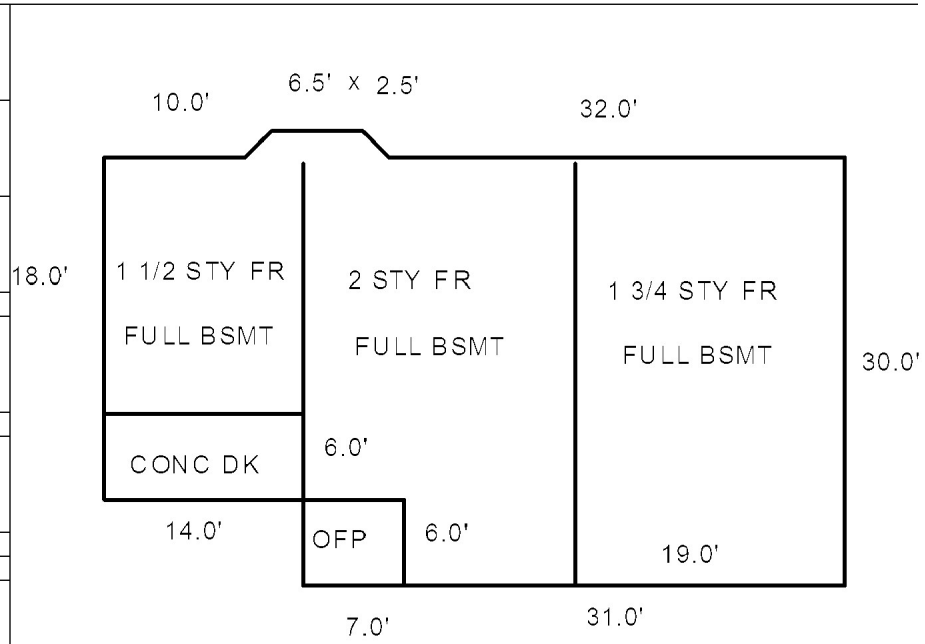

Date Inspected

Additions, Outbuildings & Improvements

Type	Year	Units	Grade	Cond	Phys.	Funct.	Sound Value
4 1 & 1/2 Story Fr	0	252	0 0	0	0 %	0 %	
27 Unfin Basement	0	252	0 0	0	0 %	0 %	
5 1 & 3/4 Story Fr	0	581	0 0	0	0 %	0 %	
60 Concrete Slab	0	84	0 0	0	0 %	0 %	
21 Open Frame	0	42	0 0	0	0 %	0 %	
67 Barn	2015	744	0 0	4	0 %	100 %	
					%	%	
					%	%	
					%	%	
					%	%	

1.One Story Fram
2.Two Story Fram
3.Three Story Fr
4.1 & 1/2 Story
5.1 & 3/4 Story
6.2 & 1/2 Story
21.Open Frame Por
22.Encl Frame Por
23.Frame Garage
24.Frame Shed
25.Frame Bay Wind
26.1SFr Overhang
27.Unfin Basement
28.Unfinished Att
29.Finished Attic

Map Lot 110-017 Account 386 Location 664 EASTSIDE ROAD Card 1 Of 1 10/01/2020

URBAN JR., (TIC) FRED
URBAN, PATRICIA H (TIC)
664 EASTSIDE ROAD
HANCOCK ME 04640

B5441P246 B6005P156

Previous Owner
DANICO, MARK R & MARY M
48 POMROY ROAD

HANCOCK ME 04640
Sale Date: 7/01/2010

Previous Owner
CARTER, RICHARD D.
30 HUNTER AVENUE

HANCOCK ME 04640
Sale Date: 1/28/2008

Previous Owner
DOW, EMMA
9 ORCHARD LANE

MANCHESTER ME 04351 3232
Sale Date: 10/27/2005

Inspection Witnessed By:

X Date

No./Date	Description	Date Insp.

Notes:

Property Data

Neighborhood	**18 Neighborhood 18**	
Tree Growth Year	**0**	
TREE GROWTH RECERTIFY	**0**	
STATE SALE CODE	**0**	
Zone/Land Use	**11 Residential**	
Secondary Zone		
Topography	**9**	**9**
1.Level	4.Below St	7.
2.Rolling	5.Low	8.
3.Above St	6.Swampy	9.
Utilities	**9 None**	**9 None**
1.Public	4.Dr Well	7.Cesspool
2.Water	5.Dug Well	8.
3.Sewer	6.Septic	9.None
Street	**9 None**	
1.Paved	4.Proposed	7.
2.Semi Imp	5.	8.
3.Gravel	6.	9.None
REVIEW STRUCTURE YEAR	**0**	
RENTAL? 0=NO 1=YES	**0**	

Sale Data

Sale Date	**7/01/2010**	
Price	**34,500**	
Sale Type	**1 Land Only**	
1.Land	4.Mobile	7.
2.L & B	5.Other	8.
3.Building	6.	9.
Financing	**9 Unknown**	
1.Convent	4.Seller	7.
2.FHA/VA	5.Private	8.
3.Assumed	6.Cash	9.Unknown
Validity	**1 Arms Length Sale**	
1.Valid	4.Split	7.Changes
2.Related	5.Partial	8.Other
3.Distress	6.Exempt	9.Fr Ffclse
Verified	**5 Public Record**	
1.Buyer	4.Agent	7.Family
2.Seller	5.Pub Rec	8.Other
3.Lender	6.MLS	9.

Assessment Record

Year	Land	Buildings	Exempt	Total
2007	40,100	0	0	40,100
2008	40,000	0	0	40,000
2009	40,000	0	0	40,000
2010	40,300	0	0	40,300
2011	40,500	0	0	40,500
2012	40,500	0	0	40,500
2013	40,500	259,800	0	300,300
2014	40,500	259,800	10,800	289,500
2015	40,500	259,800	11,000	289,300
2016	40,500	263,700	16,500	287,700
2017	40,500	263,700	22,000	282,200
2018	40,500	263,700	22,000	282,200
2019	40,500	263,700	22,000	282,200
2020	40,500	263,700	25,000	279,200

Land Data

Front Foot	Type	Effective Frontage	Effective Depth	Influence Factor	Influence Code
11.Regular Lot				%	
12.Delta Triangle				%	
13.Nabla Triangle				%	
14.Rear Land				%	
15.Miscellaneous				%	
				%	
				%	
Square Foot		**Square Feet**			
16.Regular Lot				%	
17.Secondary Lot				%	
18.Excess Land				%	
19.Condominium				%	
20.Miscellaneous				%	
				%	
				%	
Fract. Acre		**Acreage/Sites**			
21.Homesite (Frac	21	1.00		100 %	0
22.Baselot (Fract	24	0.40		100 %	0
23.Misc (Fract)				%	
Acres				%	
24.Excess Acres 1				%	
25.Excess Acres 5				%	
26.Excess Acres 2				%	
27.Excess Acres 5				%	
28.Excess Acres 1				%	
29.Excess acres				%	

Total Acreage 1.40

Influence Codes

1.Unimproved
2.Excess Frtg
3.Topography
4.Size/Shape
5.Access
6.Restriction
7.Corner Infl
8.Environment
9.Fract Share
Acres
30.Industrial Sit
31.Working Waterf
32.Cultivated Cro
33.Pasture
34.Softwood (Farm
35.Mixed Wood (Fa
36.Hardwood (Farm
37.Softwood
38.Mixed Wood
39.Hardwood
40.Wasteland
41.Gravel Pit
42.Mobile Home Si
43.Location Base
44.Lot Improvemen
45.Waterfront A
46.Lobster Pound

Hancock 2020

Hancock 2020

Map Lot 110-017 | Account 386 | Location 664 EASTSIDE ROAD | Card 1 Of 1 | 10/01/2020

Building Style	**1 Conventional**	
0.Uncoded	4.Cape	8.Log
1.Conv.	5.Garrison	9.Other
2.Ranch	6.Colonial	10.Dutch C
3.R Ranch	7.Contemp	11.Farmhou
Dwelling Units	**1**	
Other Units	**0**	
Stories	**5 One & 3/4 Story**	
1.1	4.1.5	7.3.5
2.2	5.1.75	8.
3.3	6.2.5	9.
Exterior Walls	**2 Vinyl/Aluminum**	
0.Uncoded	4.Asbestos	8.Stone
1.Wood	5.Stucco	9.Other
2.Vin/Al	6.Brick Ve	10.Concret
3.Compos.	7.Solid Br	12.
Roof Surface	**1 Asphalt Shingles**	
1.Asphalt	4.Composit	7.
2.Slate	5.Wood	8.
3.Metal	6.Other	9.
SF Masonry Trim	**0**	
OPEN-3-CUSTOM	**0**	
OPEN-4-CUSTOM	**0**	
Year Built	**2013**	
Year Remodeled	**0**	
Foundation	**1 Concrete**	
1.Concrete	4.Wood	7.
2.C Block	5.Slab	8.
3.Br/Stone	6.Piers	9.
Basement	**4 Full Basement**	
1.1/4 Bmt	4.Full Bmt	7.
2.1/2 Bmt	5.None	8.
3.3/4 Bmt	6.	9.None
Bsmt Gar # Cars	**0**	
Wet Basement	**1 Dry Basement**	
1.Dry	4.	7.
2.Damp	5.	8.
3.Wet	6.	9.

SF Bsmt Living	**0**	
Fin Bsmt Grade	**0 0**	
OPEN-5-CUSTOMIZE	**0**	
Heat Type	**100%**	**1 Hot Water BB**
0.Uncoded	4.Steam	8.Fl/Wall
1.HWBB	5.FWA	9.No Heat
2.HWCI	6.GravWA	10.Radiabt
3.H Pump	7.Electric	12.
Cool Type	**100%**	**9 None**
1.Refrig	4.W&C Air	7.
2.Evapor	5.	8.
3.H Pump	6.	9.None
Kitchen Style	**2 Typical**	
1.Modern	4.Obsolete	7.
2.Typical	5.	8.
3.Old Type	6.	9.None
Bath(s) Style	**2 Typical Bath(s)**	
1.Modern	4.Obsolete	7.
2.Typical	5.	8.
3.Old Type	6.	9.None
# Rooms	**6**	
# Bedrooms	**3**	
# Full Baths	**2**	
# Half Baths	**1**	
# Addn Fixtures	**0**	
# Fireplaces	**0**	

TRIO Software
A Division of Harris Computer Systems

Layout	**1 Typical**	
1.Typical	4.	7.
2.Inadeq	5.	8.
3.Horrid	6.	9.
Attic	**9 None**	
1.1/4 Fin	4.Full Fin	7.
2.1/2 Fin	5.Fl/Stair	8.
3.3/4 Fin	6.	9.None
Insulation	**1 Full**	
1.Full	4.Minimal	7.
2.Heavy	5.Partial	8.
3.Capped	6.	9.None
Unfinished %	**0%**	
Grade & Factor	**3 Average 115%**	
1.E Grade	4.B Grade	7.AAA Grad
2.D Grade	5.A Grade	8.SC Grade
3.C Grade	6.AA Grade	9.Same
SQFT (Footprint)	**947**	
Condition	**4 Average**	
1.Poor	4.Avg	7.V G
2.Fair	5.Avg+	8.Exc
3.Avg-	6.Good	9.Same
Phys. % Good	**0%**	
Funct. % Good	**100%**	
Functional Code	**9 None**	
1.Incomp	4.Delap	7.Seasonal
2.O-Built	5.Bsmt	8.
3.Fire	6.2014 ADJ	9.None
Econ. % Good	**100%**	
Economic Code	**None**	
0.None	3.No Power	7.
1.Location	4.Generate	8.
2.Encroach	9.None	9.
Entrance Code	**0**	
1.Interior	4.Vacant	7.
2.Refusal	5.Estimate	8.
3.Informed	6.	9.
Information Code	**0**	
1.Owner	4.Agent	7.
2.Relative	5.Estimate	8.
3.Tenant	6.Other	9.

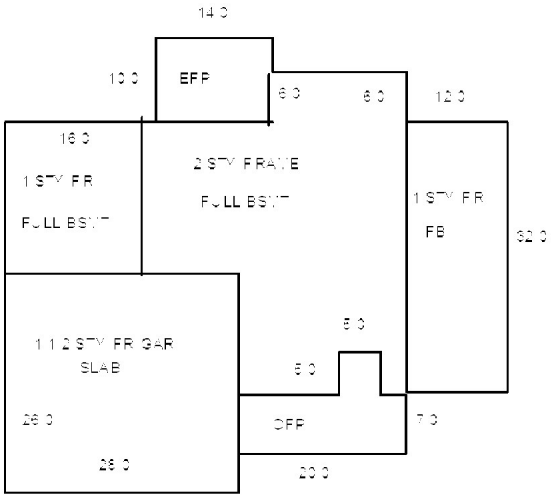

Date Inspected

Additions, Outbuildings & Improvements

Type	Year	Units	Grade	Cond	Phys.	Funct.	Sound Value
1 One Story Frame	0	384	0 0	0	0 %	0 %	
27 Unfin Basement	0	384	0 0	0	0 %	0 %	
1 One Story Frame	0	288	0 0	0	0 %	0 %	
82 1 1/2 SF GARAGE	0	728	0 0	0	0 %	0 %	
22 Encl Frame Porch	0	140	0 0	0	0 %	0 %	
21 Open Frame	0	165	0 0	0	0 %	0 %	
24 Frame Shed	2016	160	6 100	4	0 %	100 %	
					%	%	
					%	%	
					%	%	

1.One Story Fram
2.Two Story Fram
3.Three Story Fr
4.1 & 1/2 Story
5.1 & 3/4 Story
6.2 & 1/2 Story
21.Open Frame Por
22.Encl Frame Por
23.Frame Garage
24.Frame Shed
25.Frame Bay Wind
26.1SFr Overhang
27.Unfin Basement
28.Unfinished Att
29.Finished Attic

Map Lot 110-018 | Account 1582 | Location 668 EASTSIDE ROAD | Card 1 Of 1 | 10/01/2020

NAYLOR, JESSICA R, (J/T)
OAKES, GEROMY M (J/T)
PO BOX 203
ELLSWORTH ME 04640

B1824P543 B5295P314

Previous Owner
ESTEY, K BARRY & JOANNE
P O BOX 493

HANCOCK ME 04640
Sale Date: 7/17/2015

Previous Owner
POMROY, ANNA C.
c/o TUFTS, JOSEPH
PO BOX 6623
SCARBOROUGH ME 04070
Sale Date: 9/24/2009

Inspection Witnessed By:

X Date

No./Date	Description	Date Insp.

Notes:

Hancock 2020

Property Data

Neighborhood **18 Neighborhood 18**

Tree Growth Year **0**

TREE GROWTH RECERTIFY **0**

STATE SALE CODE **0**

Zone/Land Use **11 Residential**

Secondary Zone

Topography

1.Level	4.Below St	7.
2.Rolling	5.Low	8.
3.Above St	6.Swampy	9.

Utilities

1.Public	4.Dr Well	7.Cesspool
2.Water	5.Dug Well	8.
3.Sewer	6.Septic	9.None

Street

1.Paved	4.Proposed	7.
2.Semi Imp	5.	8.
3.Gravel	6.	9.None

REVIEW STRUCTURE YEAR **0**

RENTAL? 0=NO 1=YES **1**

Sale Data

Sale Date **7/17/2015**

Price **123,000**

Sale Type **2 Land & Buildings**

1.Land	4.Mobile	7.
2.L & B	5.Other	8.
3.Building	6.	9.

Financing **9 Unknown**

1.Convent	4.Seller	7.
2.FHA/VA	5.Private	8.
3.Assumed	6.Cash	9.Unknown

Validity **1 Arms Length Sale**

1.Valid	4.Split	7.Changes
2.Related	5.Partial	8.Other
3.Distress	6.Exempt	9.Fr Ffclse

Verified **5 Public Record**

1.Buyer	4.Agent	7.Family
2.Seller	5.Pub Rec	8.Other
3.Lender	6.MLS	9.

Assessment Record

Year	Land	Buildings	Exempt	Total
2007	55,100	46,800	13,000	88,900
2008	55,100	44,400	13,000	86,500
2009	55,100	44,400	0	99,500
2010	55,100	48,500	0	103,600
2011	56,600	48,500	0	105,100
2012	56,600	48,500	0	105,100
2013	56,600	48,500	0	105,100
2014	56,600	44,200	0	100,800
2015	56,600	44,200	0	100,800
2016	56,600	44,200	0	100,800
2017	56,600	43,500	0	100,100
2018	56,600	43,500	0	100,100
2019	56,600	43,500	0	100,100
2020	56,600	43,500	0	100,100

Land Data

Front Foot	Type	Effective Frontage	Effective Depth	Influence Factor	Influence Code
11.Regular Lot				%	
12.Delta Triangle				%	
13.Nabla Triangle				%	
14.Rear Land				%	
15.Miscellaneous				%	
				%	
				%	
Square Foot		**Square Feet**			
16.Regular Lot				%	
17.Secondary Lot				%	
18.Excess Land				%	
19.Condominium				%	
20.Miscellaneous				%	
				%	
				%	
Fract. Acre		**Acreage/Sites**			
21.Homesite (Frac	21	1.00	100	%	0
22.Baselot (Fract	24	1.37	100	%	0
23.Misc (Fract)	44	1.00	100	%	0
Acres				%	
24.Excess Acres 1				%	
25.Excess Acres 5				%	
26.Excess Acres 2				%	
27.Excess Acres 5				%	
28.Excess Acres 1				%	
29.Excess acres				%	

Total Acreage 2.37

Influence Codes

1.Unimproved
2.Excess Frtg
3.Topography
4.Size/Shape
5.Access
6.Restriction
7.Corner Infl
8.Environment
9.Fract Share
Acres
30.Industrial Sit
31.Working Waterf
32.Cultivated Cro
33.Pasture
34.Softwood (Farm
35.Mixed Wood (Fa
36.Hardwood (Farm
37.Softwood
38.Mixed Wood
39.Hardwood
40.Wasteland
41.Gravel Pit
42.Mobile Home Si
43.Location Base
44.Lot Improvemen
45.Waterfront A
46.Lobster Pound

Hancock 2020

Map Lot 110-018 | Account 1582 | Location 668 EASTSIDE ROAD | Card 1 Of 1 | 10/01/2020

Building Style	**1 Conventional**	
0.Uncoded	4.Cape	8.Log
1.Conv.	5.Garrison	9.Other
2.Ranch	6.Colonial	10.Dutch C
3.R Ranch	7.Contemp	11.Farmhou
Dwelling Units	**1**	
Other Units	**0**	
Stories	**1 One Story**	
1.1	4.1.5	7.3.5
2.2	5.1.75	8.
3.3	6.2.5	9.
Exterior Walls	**1 Wood Siding**	
0.Uncoded	4.Asbestos	8.Stone
1.Wood	5.Stucco	9.Other
2.Vin/Al	6.Brick Ve	10.Concret
3.Compos.	7.Solid Br	12.
Roof Surface	**1 Asphalt Shingles**	
1.Asphalt	4.Composit	7.
2.Slate	5.Wood	8.
3.Metal	6.Other	9.
SF Masonry Trim	**0**	
OPEN-3-CUSTOM	**0**	
OPEN-4-CUSTOM	**0**	
Year Built	**1930**	
Year Remodeled	**0**	
Foundation	**3 Brick &/or Stone**	
1.Concrete	4.Wood	7.
2.C Block	5.Slab	8.
3.Br/Stone	6.Piers	9.
Basement	**9 No Basement**	
1.1/4 Bmt	4.Full Bmt	7.
2.1/2 Bmt	5.None	8.
3.3/4 Bmt	6.	9.None
Bsmt Gar # Cars	**0**	
Wet Basement	**9 No Basement**	
1.Dry	4.	7.
2.Damp	5.	8.
3.Wet	6.	9.

SF Bsmt Living	**0**	
Fin Bsmt Grade	**0 0**	
OPEN-5-CUSTOMIZE	**0**	
Heat Type	**100% 1 Hot Water BB**	
0.Uncoded	4.Steam	8.Fl/Wall
1.HWBB	5.FWA	9.No Heat
2.HWCI	6.GravWA	10.Radiabt
3.H Pump	7.Electric	12.
Cool Type	**100% 9 None**	
1.Refrig	4.W&C Air	7.
2.Evapor	5.	8.
3.H Pump	6.	9.None
Kitchen Style	**2 Typical**	
1.Modern	4.Obsolete	7.
2.Typical	5.	8.
3.Old Type	6.	9.None
Bath(s) Style	**2 Typical Bath(s)**	
1.Modern	4.Obsolete	7.
2.Typical	5.	8.
3.Old Type	6.	9.None
# Rooms	**3**	
# Bedrooms	**1**	
# Full Baths	**1**	
# Half Baths	**0**	
# Addn Fixtures	**0**	
# Fireplaces	**0**	

TRIO Software
A Division of Harris Computer Systems

Layout	**1 Typical**	
1.Typical	4.	7.
2.Inadeq	5.	8.
3.Horrid	6.	9.
Attic	**2 1/2 Finished**	
1.1/4 Fin	4.Full Fin	7.
2.1/2 Fin	5.Fl/Stair	8.
3.3/4 Fin	6.	9.None
Insulation	**5 Partial**	
1.Full	4.Minimal	7.
2.Heavy	5.Partial	8.
3.Capped	6.	9.None
Unfinished %	**0%**	
Grade & Factor	**3 Average 100%**	
1.E Grade	4.B Grade	7.AAA Grad
2.D Grade	5.A Grade	8.SC Grade
3.C Grade	6.AA Grade	9.Same
SQFT (Footprint)	**624**	
Condition	**4 Average**	
1.Poor	4.Avg	7.V G
2.Fair	5.Avg+	8.Exc
3.Avg-	6.Good	9.Same
Phys. % Good	**0%**	
Funct. % Good	**90%**	
Functional Code	**6 2014 ADJUSTMENT**	
1.Incomp	4.Delap	7.Seasonal
2.O-Built	5.Bsmt	8.
3.Fire	6.2014 ADJ	9.None
Econ. % Good	**100%**	
Economic Code	**None**	
0.None	3.No Power	7.
1.Location	4.Generate	8.
2.Encroach	9.None	9.
Entrance Code	**0**	
1.Interior	4.Vacant	7.
2.Refusal	5.Estimate	8.
3.Informed	6.	9.
Information Code	**0**	
1.Owner	4.Agent	7.
2.Relative	5.Estimate	8.
3.Tenant	6.Other	9.

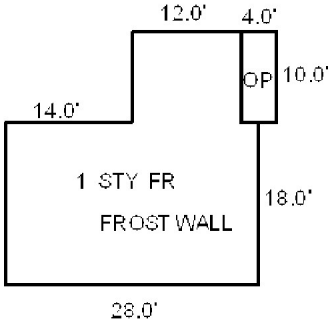

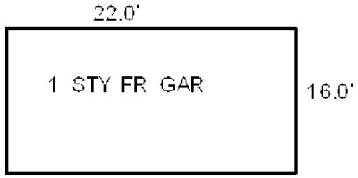

Date Inspected

Additions, Outbuildings & Improvements

Type	Year	Units	Grade	Cond	Phys.	Funct.	Sound Value
21 Open Frame	0	40	0 0	0	0 %	0 %	
81 1 SF GARAGE	2010	352	3 100	4	0 %	100 %	
					%	%	
					%	%	
					%	%	
					%	%	
					%	%	
					%	%	
					%	%	
					%	%	

1.One Story Fram
2.Two Story Fram
3.Three Story Fr
4.1 & 1/2 Story
5.1 & 3/4 Story
6.2 & 1/2 Story
21.Open Frame Por
22.Encl Frame Por
23.Frame Garage
24.Frame Shed
25.Frame Bay Wind
26.1SFr Overhang
27.Unfin Basement
28.Unfinished Att
29.Finished Attic

Map Lot 110-019 Account 1629 Location EASTSIDE ROAD Card 1 Of 1 10/01/2020

WALKER, CRAIG & KATHERINE LIV TR
N100 W14650 SUNBURST TRAIL
GERMANTOWN WI 53022

B1684P614 B5673P336

Property Data

Neighborhood **18 Neighborhood 18**

Tree Growth Year **0**

TREE GROWTH RECERTIFY **0**

STATE SALE CODE **0**

Zone/Land Use **11 Residential**

Secondary Zone

Topography

1.Level	4.Below St	7.
2.Rolling	5.Low	8.
3.Above St	6.Swampy	9.

Utilities

1.Public	4.Dr Well	7.Cesspool
2.Water	5.Dug Well	8.
3.Sewer	6.Septic	9.None

Street

1.Paved	4.Proposed	7.
2.Semi Imp	5.	8.
3.Gravel	6.	9.None

REVIEW STRUCTURE YEAR **0**

RENTAL? 0=NO 1=YES **0**

Sale Data

Sale Date

Price

Sale Type

1.Land	4.Mobile	7.
2.L & B	5.Other	8.
3.Building	6.	9.

Financing

1.Convent	4.Seller	7.
2.FHA/VA	5.Private	8.
3.Assumed	6.Cash	9.Unknown

Validity

1.Valid	4.Split	7.Changes
2.Related	5.Partial	8.Other
3.Distress	6.Exempt	9.Fr Ffclse

Verified

1.Buyer	4.Agent	7.Family
2.Seller	5.Pub Rec	8.Other
3.Lender	6.MLS	9.

Assessment Record

Year	Land	Buildings	Exempt	Total
2007	40,100	0	0	40,100
2008	40,100	0	0	40,100
2009	40,100	0	0	40,100
2010	40,100	0	0	40,100
2011	40,100	0	0	40,100
2012	40,100	0	0	40,100
2013	40,100	0	0	40,100
2014	40,100	0	0	40,100
2015	40,100	0	0	40,100
2016	40,100	0	0	40,100
2017	40,100	0	0	40,100
2018	40,100	0	0	40,100
2019	40,100	0	0	40,100
2020	40,100	0	0	40,100

Land Data

Front Foot	Type	Effective Frontage	Effective Depth	Influence Factor	Influence Code
11.Regular Lot				%	
12.Delta Triangle				%	
13.Nabla Triangle				%	
14.Rear Land				%	
15.Miscellaneous				%	
				%	
				%	
Square Foot		**Square Feet**			
16.Regular Lot				%	
17.Secondary Lot				%	
18.Excess Land				%	
19.Condominium				%	
20.Miscellaneous				%	
				%	
				%	
Fract. Acre		**Acreage/Sites**			
21.Homesite (Frac	21	1.00		100 %	0
22.Baselot (Fract	40	2.90		100 %	0
23.Misc (Fract)				%	
Acres				%	
24.Excess Acres 1				%	
25.Excess Acres 5				%	
26.Excess Acres 2				%	
27.Excess Acres 5				%	
28.Excess Acres 1				%	
29.Excess acres				%	

Total Acreage 3.90

Influence Codes

1.Unimproved
2.Excess Frtg
3.Topography
4.Size/Shape
5.Access
6.Restriction
7.Corner Infl
8.Environment
9.Fract Share
Acres
30.Industrial Sit
31.Working Waterf
32.Cultivated Cro
33.Pasture
34.Softwood (Farm
35.Mixed Wood (Fa
36.Hardwood (Farm
37.Softwood
38.Mixed Wood
39.Hardwood
40.Wasteland
41.Gravel Pit
42.Mobile Home Si
43.Location Base
44.Lot Improvemen
45.Waterfront A
46.Lobster Pound

Inspection Witnessed By:

X Date

No./Date	Description	Date Insp.

Notes:

Hancock 2020

Hancock 2020

Map Lot 110-019 | Account 1629 | Location EASTSIDE ROAD | Card 1 Of 1 | 10/01/2020

Building Style **0 Uncoded**		
0.Uncoded	4.Cape	8.Log
1.Conv.	5.Garrison	9.Other
2.Ranch	6.Colonial	10.Dutch C
3.R Ranch	7.Contemp	11.Farmhou
Dwelling Units **0**		
Other Units **0**		
Stories **0**		
1.1	4.1.5	7.3.5
2.2	5.1.75	8.
3.3	6.2.5	9.
Exterior Walls **0 Uncoded**		
0.Uncoded	4.Asbestos	8.Stone
1.Wood	5.Stucco	9.Other
2.Vin/Al	6.Brick Ve	10.Concret
3.Compos.	7.Solid Br	12.
Roof Surface **0**		
1.Asphalt	4.Composit	7.
2.Slate	5.Wood	8.
3.Metal	6.Other	9.
SF Masonry Trim **0**		
OPEN-3-CUSTOM **0**		
OPEN-4-CUSTOM **0**		
Year Built **0**		
Year Remodeled **0**		
Foundation **0**		
1.Concrete	4.Wood	7.
2.C Block	5.Slab	8.
3.Br/Stone	6.Piers	9.
Basement **0**		
1.1/4 Bmt	4.Full Bmt	7.
2.1/2 Bmt	5.None	8.
3.3/4 Bmt	6.	9.None
Bsmt Gar # Cars **0**		
Wet Basement **0**		
1.Dry	4.	7.
2.Damp	5.	8.
3.Wet	6.	9.

SF Bsmt Living **0**		
Fin Bsmt Grade **0 0**		
OPEN-5-CUSTOMIZE **0**		
Heat Type **100%** **0 Uncoded**		
0.Uncoded	4.Steam	8.Fl/Wall
1.HWBB	5.FWA	9.No Heat
2.HWCI	6.GravWA	10.Radiabt
3.H Pump	7.Electric	12.
Cool Type **0%** **9 None**		
1.Refrig	4.W&C Air	7.
2.Evapor	5.	8.
3.H Pump	6.	9.None
Kitchen Style **0**		
1.Modern	4.Obsolete	7.
2.Typical	5.	8.
3.Old Type	6.	9.None
Bath(s) Style **0**		
1.Modern	4.Obsolete	7.
2.Typical	5.	8.
3.Old Type	6.	9.None
# Rooms **0**		
# Bedrooms **0**		
# Full Baths **0**		
# Half Baths **0**		
# Addn Fixtures **0**		
# Fireplaces **0**		

TRIO Software
A Division of Harris Computer Systems

Layout **0**		
1.Typical	4.	7.
2.Inadeq	5.	8.
3.Horrid	6.	9.
Attic **0**		
1.1/4 Fin	4.Full Fin	7.
2.1/2 Fin	5.Fl/Stair	8.
3.3/4 Fin	6.	9.None
Insulation **0**		
1.Full	4.Minimal	7.
2.Heavy	5.Partial	8.
3.Capped	6.	9.None
Unfinished % **0%**		
Grade & Factor **0 0%**		
1.E Grade	4.B Grade	7.AAA Grad
2.D Grade	5.A Grade	8.SC Grade
3.C Grade	6.AA Grade	9.Same
SQFT (Footprint) **0**		
Condition **0**		
1.Poor	4.Avg	7.V G
2.Fair	5.Avg+	8.Exc
3.Avg-	6.Good	9.Same
Phys. % Good **0%**		
Funct. % Good **100%**		
Functional Code **9 None**		
1.Incomp	4.Delap	7.Seasonal
2.O-Built	5.Bsmt	8.
3.Fire	6.2014 ADJ	9.None
Econ. % Good **100%**		
Economic Code **None**		
0.None	3.No Power	7.
1.Location	4.Generate	8.
2.Encroach	9.None	9.
Entrance Code **0**		
1.Interior	4.Vacant	7.
2.Refusal	5.Estimate	8.
3.Informed	6.	9.
Information Code **0**		
1.Owner	4.Agent	7.
2.Relative	5.Estimate	8.
3.Tenant	6.Other	9.

Date Inspected

Additions, Outbuildings & Improvements

Type	Year	Units	Grade	Cond	Phys.	Funct.	Sound Value
					%	%	
					%	%	
					%	%	
					%	%	
					%	%	
					%	%	
					%	%	
					%	%	
					%	%	
					%	%	

1.One Story Fram
2.Two Story Fram
3.Three Story Fr
4.1 & 1/2 Story
5.1 & 3/4 Story
6.2 & 1/2 Story
21.Open Frame Por
22.Encl Frame Por
23.Frame Garage
24.Frame Shed
25.Frame Bay Wind
26.1SFr Overhang
27.Unfin Basement
28.Unfinished Att
29.Finished Attic

Map Lot 110-020 Account 204 Location EASTSIDE ROAD Card 1 Of 1 10/01/2020

CARTER, SANDRA L
& ALEXANDER STAMATIEN, JR.
736 WEST MAIN ST.
WEST HAVEN CT 06516

B2698P443

Inspection Witnessed By:

X Date

No./Date	Description	Date Insp.

Notes:

Property Data

Neighborhood **19 Neighborhood 19**

Tree Growth Year **0**

TREE GROWTH RECERTIFY **0**

STATE SALE CODE **0**

Zone/Land Use **11 Residential**

Secondary Zone

Topography **9** **9**

1.Level 4.Below St 7.
2.Rolling 5.Low 8.
3.Above St 6.Swampy 9.

Utilities **9 None** **9 None**

1.Public 4.Dr Well 7.Cesspool
2.Water 5.Dug Well 8.
3.Sewer 6.Septic 9.None

Street **9 None**

1.Paved 4.Proposed 7.
2.Semi Imp 5. 8.
3.Gravel 6. 9.None

REVIEW STRUCTURE YEAR **0**

RENTAL? 0=NO 1=YES **0**

Sale Data

Sale Date

Price

Sale Type

1.Land 4.Mobile 7.
2.L & B 5.Other 8.
3.Building 6. 9.

Financing

1.Convent 4.Seller 7.
2.FHA/VA 5.Private 8.
3.Assumed 6.Cash 9.Unknown

Validity

1.Valid 4.Split 7.Changes
2.Related 5.Partial 8.Other
3.Distress 6.Exempt 9.Fr Ffclse

Verified

1.Buyer 4.Agent 7.Family
2.Seller 5.Pub Rec 8.Other
3.Lender 6.MLS 9.

Assessment Record

Year	Land	Buildings	Exempt	Total
2007	41,400	0	0	41,400
2008	41,400	0	0	41,400
2009	41,400	0	0	41,400
2010	41,400	0	0	41,400
2011	41,400	0	0	41,400
2012	41,400	0	0	41,400
2013	41,400	0	0	41,400
2014	41,400	0	0	41,400
2015	41,400	0	0	41,400
2016	41,400	0	0	41,400
2017	41,400	0	0	41,400
2018	41,400	0	0	41,400
2019	41,400	0	0	41,400
2020	41,400	0	0	41,400

Land Data

Front Foot	Type	Effective Frontage	Effective Depth	Influence Factor	Influence Code
11.Regular Lot				%	
12.Delta Triangle				%	
13.Nabla Triangle				%	
14.Rear Land				%	
15.Miscellaneous				%	
				%	
				%	
Square Foot		**Square Feet**			
16.Regular Lot				%	
17.Secondary Lot				%	
18.Excess Land				%	
19.Condominium				%	
20.Miscellaneous				%	
				%	
				%	
Fract. Acre		**Acreage/Sites**			
21.Homesite (Frac	21	1.00		100 %	0
22.Baselot (Fract	24	1.00		100 %	0
23.Misc (Fract)	40	3.40		100 %	0
Acres				%	
24.Excess Acres 1				%	
25.Excess Acres 5				%	
26.Excess Acres 2				%	
27.Excess Acres 5				%	
28.Excess Acres 1				%	
29.Excess acres				%	

Total Acreage 5.40

Influence Codes

1.Unimproved
2.Excess Frtg
3.Topography
4.Size/Shape
5.Access
6.Restriction
7.Corner Infl
8.Environment
9.Fract Share
Acres
30.Industrial Sit
31.Working Waterf
32.Cultivated Cro
33.Pasture
34.Softwood (Farm
35.Mixed Wood (Fa
36.Hardwood (Farm
37.Softwood
38.Mixed Wood
39.Hardwood
40.Wasteland
41.Gravel Pit
42.Mobile Home Si
43.Location Base
44.Lot Improvemen
45.Waterfront A
46.Lobster Pound

Hancock 2020

Hancock 2020

Map Lot 110-020 | Account 204 | Location EASTSIDE ROAD | Card 1 Of 1 | 10/01/2020

Building Style		
0.Uncoded	4.Cape	8.Log
1.Conv.	5.Garrison	9.Other
2.Ranch	6.Colonial	10.Dutch C
3.R Ranch	7.Contemp	11.Farmhou

Dwelling Units
Other Units

Stories		
1.1	4.1.5	7.3.5
2.2	5.1.75	8.
3.3	6.2.5	9.

Exterior Walls		
0.Uncoded	4.Asbestos	8.Stone
1.Wood	5.Stucco	9.Other
2.Vin/Al	6.Brick Ve	10.Concret
3.Compos.	7.Solid Br	12.

Roof Surface		
1.Asphalt	4.Composit	7.
2.Slate	5.Wood	8.
3.Metal	6.Other	9.

SF Masonry Trim
OPEN-3-CUSTOM
OPEN-4-CUSTOM
Year Built
Year Remodeled

Foundation		
1.Concrete	4.Wood	7.
2.C Block	5.Slab	8.
3.Br/Stone	6.Piers	9.

Basement		
1.1/4 Bmt	4.Full Bmt	7.
2.1/2 Bmt	5.None	8.
3.3/4 Bmt	6.	9.None

Bsmt Gar # Cars

Wet Basement		
1.Dry	4.	7.
2.Damp	5.	8.
3.Wet	6.	9.

SF Bsmt Living
Fin Bsmt Grade
OPEN-5-CUSTOMIZE

Heat Type **100%**		
0.Uncoded	4.Steam	8.Fl/Wall
1.HWBB	5.FWA	9.No Heat
2.HWCI	6.GravWA	10.Radiabt
3.H Pump	7.Electric	12.

Cool Type **0%**		
1.Refrig	4.W&C Air	7.
2.Evapor	5.	8.
3.H Pump	6.	9.None

Kitchen Style		
1.Modern	4.Obsolete	7.
2.Typical	5.	8.
3.Old Type	6.	9.None

Bath(s) Style		
1.Modern	4.Obsolete	7.
2.Typical	5.	8.
3.Old Type	6.	9.None

Rooms
Bedrooms
Full Baths
Half Baths
Addn Fixtures
Fireplaces

TRIO Software
A Division of Harris Computer Systems

Layout		
1.Typical	4.	7.
2.Inadeq	5.	8.
3.Horrid	6.	9.

Attic		
1.1/4 Fin	4.Full Fin	7.
2.1/2 Fin	5.Fl/Stair	8.
3.3/4 Fin	6.	9.None

Insulation		
1.Full	4.Minimal	7.
2.Heavy	5.Partial	8.
3.Capped	6.	9.None

Unfinished %

Grade & Factor		
1.E Grade	4.B Grade	7.AAA Grad
2.D Grade	5.A Grade	8.SC Grade
3.C Grade	6.AA Grade	9.Same

SQFT (Footprint)

Condition		
1.Poor	4.Avg	7.V G
2.Fair	5.Avg+	8.Exc
3.Avg-	6.Good	9.Same

Phys. % Good
Funct. % Good

Functional Code		
1.Incomp	4.Delap	7.Seasonal
2.O-Built	5.Bsmt	8.
3.Fire	6.2014 ADJ	9.None

Econ. % Good

Economic Code		
0.None	3.No Power	7.
1.Location	4.Generate	8.
2.Encroach	9.None	9.

Entrance Code **0**		
1.Interior	4.Vacant	7.
2.Refusal	5.Estimate	8.
3.Informed	6.	9.

Information Code **0**		
1.Owner	4.Agent	7.
2.Relative	5.Estimate	8.
3.Tenant	6.Other	9.

Date Inspected

Additions, Outbuildings & Improvements

Type	Year	Units	Grade	Cond	Phys.	Funct.	Sound Value
					%	%	
					%	%	
					%	%	
					%	%	
					%	%	
					%	%	
					%	%	
					%	%	
					%	%	
					%	%	

1.One Story Fram
2.Two Story Fram
3.Three Story Fr
4.1 & 1/2 Story
5.1 & 3/4 Story
6.2 & 1/2 Story
21.Open Frame Por
22.Encl Frame Por
23.Frame Garage
24.Frame Shed
25.Frame Bay Wind
26.1SFr Overhang
27.Unfin Basement
28.Unfinished Att
29.Finished Attic

Map Lot 110-021 Account 211 Location 20 VICTORY LANE Card 1 Of 2 10/01/2020

BAGLEY, SHAWN R
P O BOX 182
HANCOCK ME 04640

B2630P197

Inspection Witnessed By:

X Date

No./Date	Description	Date Insp.

Notes:

Hancock 2020

Property Data

Neighborhood **18 Neighborhood 18**

Tree Growth Year **0**

TREE GROWTH RECERTIFY **0**

STATE SALE CODE **0**

Zone/Land Use **11 Residential**

Secondary Zone

Topography **9** **9**

1.Level 4.Below St 7.
2.Rolling 5.Low 8.
3.Above St 6.Swampy 9.

Utilities **9 None** **9 None**

1.Public 4.Dr Well 7.Cesspool
2.Water 5.Dug Well 8.
3.Sewer 6.Septic 9.None

Street **1 Paved**

1.Paved 4.Proposed 7.
2.Semi Imp 5. 8.
3.Gravel 6. 9.None

REVIEW STRUCTURE YEAR **0**

RENTAL? 0=NO 1=YES **1**

Sale Data

Sale Date

Price

Sale Type

1.Land 4.Mobile 7.
2.L & B 5.Other 8.
3.Building 6. 9.

Financing

1.Convent 4.Seller 7.
2.FHA/VA 5.Private 8.
3.Assumed 6.Cash 9.Unknown

Validity

1.Valid 4.Split 7.Changes
2.Related 5.Partial 8.Other
3.Distress 6.Exempt 9.Fr Ffclse

Verified

1.Buyer 4.Agent 7.Family
2.Seller 5.Pub Rec 8.Other
3.Lender 6.MLS 9.

Assessment Record

Year	Land	Buildings	Exempt	Total
2007	71,200	36,300	0	107,500
2008	71,200	36,300	0	107,500
2009	71,200	33,900	0	105,100
2010	71,200	33,900	0	105,100
2011	71,200	31,900	0	103,100
2012	71,200	29,400	0	100,600
2013	71,200	29,400	0	100,600
2014	71,200	29,100	0	100,300
2015	71,200	29,100	0	100,300
2018	71,200	29,100	0	100,300
2019	71,200	29,100	0	100,300
2020	71,200	29,100	0	100,300

Land Data

Front Foot

11.Regular Lot
12.Delta Triangle
13.Nabla Triangle
14.Rear Land
15.Miscellaneous

Square Foot

16.Regular Lot
17.Secondary Lot
18.Excess Land
19.Condominium
20.Miscellaneous

Fract. Acre

21.Homesite (Frac
22.Baselot (Fract
23.Misc (Fract)
Acres
24.Excess Acres 1
25.Excess Acres 5
26.Excess Acres 2
27.Excess Acres 5
28.Excess Acres 1
29.Excess acres

Type	Effective Frontage	Effective Depth	Influence Factor	Influence Code
			%	
			%	
			%	
			%	
			%	
			%	
			%	
	Square Feet			
			%	
			%	
			%	
			%	
			%	
			%	
			%	
	Acreage/Sites			
21	1.00	100	%	0
24	1.00	100	%	0
44	2.00	100	%	0
			%	
			%	
			%	
			%	

Total Acreage 2.00

Influence Codes

1.Unimproved
2.Excess Frtg
3.Topography
4.Size/Shape
5.Access
6.Restriction
7.Corner Infl
8.Environment
9.Fract Share
Acres
30.Industrial Sit
31.Working Waterf
32.Cultivated Cro
33.Pasture
34.Softwood (Farm
35.Mixed Wood (Fa
36.Hardwood (Farm
37.Softwood
38.Mixed Wood
39.Hardwood
40.Wasteland
41.Gravel Pit
42.Mobile Home Si
43.Location Base
44.Lot Improvemen
45.Waterfront A
46.Lobster Pound

Hancock 2020

Map Lot 110-021 | Account 211 | Location 20 VICTORY LANE | Card 1 Of 2 | 10/01/2020

Building Style **0 Uncoded**		
0.Uncoded	4.Cape	8.Log
1.Conv.	5.Garrison	9.Other
2.Ranch	6.Colonial	10.Dutch C
3.R Ranch	7.Contemp	11.Farmhou
Dwelling Units **0**		
Other Units **0**		
Stories **0**		
1.1	4.1.5	7.3.5
2.2	5.1.75	8.
3.3	6.2.5	9.
Exterior Walls **0 Uncoded**		
0.Uncoded	4.Asbestos	8.Stone
1.Wood	5.Stucco	9.Other
2.Vin/Al	6.Brick Ve	10.Concret
3.Compos.	7.Solid Br	12.
Roof Surface **0**		
1.Asphalt	4.Composit	7.
2.Slate	5.Wood	8.
3.Metal	6.Other	9.
SF Masonry Trim **0**		
OPEN-3-CUSTOM **0**		
OPEN-4-CUSTOM **0**		
Year Built **0**		
Year Remodeled **0**		
Foundation **0**		
1.Concrete	4.Wood	7.
2.C Block	5.Slab	8.
3.Br/Stone	6.Piers	9.
Basement **0**		
1.1/4 Bmt	4.Full Bmt	7.
2.1/2 Bmt	5.None	8.
3.3/4 Bmt	6.	9.None
Bsmt Gar # Cars **0**		
Wet Basement **0**		
1.Dry	4.	7.
2.Damp	5.	8.
3.Wet	6.	9.

SF Bsmt Living **0**		
Fin Bsmt Grade **0 0**		
OPEN-5-CUSTOMIZE **0**		
Heat Type **100%** **0 Uncoded**		
0.Uncoded	4.Steam	8.Fl/Wall
1.HWBB	5.FWA	9.No Heat
2.HWCI	6.GravWA	10.Radiabt
3.H Pump	7.Electric	12.
Cool Type **0%** **9 None**		
1.Refrig	4.W&C Air	7.
2.Evapor	5.	8.
3.H Pump	6.	9.None
Kitchen Style **0**		
1.Modern	4.Obsolete	7.
2.Typical	5.	8.
3.Old Type	6.	9.None
Bath(s) Style **0**		
1.Modern	4.Obsolete	7.
2.Typical	5.	8.
3.Old Type	6.	9.None
# Rooms **0**		
# Bedrooms **0**		
# Full Baths **0**		
# Half Baths **0**		
# Addn Fixtures **0**		
# Fireplaces **0**		

TRIO Software
A Division of Harris Computer Systems

Layout **0**		
1.Typical	4.	7.
2.Inadeq	5.	8.
3.Horrid	6.	9.
Attic **0**		
1.1/4 Fin	4.Full Fin	7.
2.1/2 Fin	5.Fl/Stair	8.
3.3/4 Fin	6.	9.None
Insulation **0**		
1.Full	4.Minimal	7.
2.Heavy	5.Partial	8.
3.Capped	6.	9.None
Unfinished % **0%**		
Grade & Factor **0 0%**		
1.E Grade	4.B Grade	7.AAA Grad
2.D Grade	5.A Grade	8.SC Grade
3.C Grade	6.AA Grade	9.Same
SQFT (Footprint) **0**		
Condition **0**		
1.Poor	4.Avg	7.V G
2.Fair	5.Avg+	8.Exc
3.Avg-	6.Good	9.Same
Phys. % Good **0%**		
Funct. % Good **100%**		
Functional Code **9 None**		
1.Incomp	4.Delap	7.Seasonal
2.O-Built	5.Bsmt	8.
3.Fire	6.2014 ADJ	9.None
Econ. % Good **100%**		
Economic Code **None**		
0.None	3.No Power	7.
1.Location	4.Generate	8.
2.Encroach	9.None	9.
Entrance Code **0**		
1.Interior	4.Vacant	7.
2.Refusal	5.Estimate	8.
3.Informed	6.	9.
Information Code **0**		
1.Owner	4.Agent	7.
2.Relative	5.Estimate	8.
3.Tenant	6.Other	9.

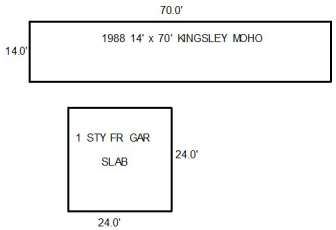

Date Inspected

Additions, Outbuildings & Improvements

Type	Year	Units	Grade	Cond	Phys.	Funct.	Sound Value
998 14 Mobile Home	1988	14x70	3 100	5	0 %	100 %	
81 1 SF GARAGE	1999	576	3 100	4	0 %	100 %	
					%	%	
					%	%	
					%	%	
					%	%	
					%	%	
					%	%	
					%	%	
					%	%	

1.One Story Fram
2.Two Story Fram
3.Three Story Fr
4.1 & 1/2 Story
5.1 & 3/4 Story
6.2 & 1/2 Story
21.Open Frame Por
22.Encl Frame Por
23.Frame Garage
24.Frame Shed
25.Frame Bay Wind
26.1SFr Overhang
27.Unfin Basement
28.Unfinished Att
29.Finished Attic

Map Lot 110-021 Account 211 Location 4 VICTORY LANE Card 2 Of 2 10/01/2020

BAGLEY, SHAWN R
P O BOX 182
HANCOCK ME 04640

B2630P197

Property Data

Neighborhood **18 Neighborhood 18**

Tree Growth Year **0**

TREE GROWTH RECERTIFY **0**

STATE SALE CODE **0**

Zone/Land Use **11 Residential**

Secondary Zone

Topography **9** **9**

1.Level 4.Below St 7.
2.Rolling 5.Low 8.
3.Above St 6.Swampy 9.

Utilities **9 None** **9 None**

1.Public 4.Dr Well 7.Cesspool
2.Water 5.Dug Well 8.
3.Sewer 6.Septic 9.None

Street **1 Paved**

1.Paved 4.Proposed 7.
2.Semi Imp 5. 8.
3.Gravel 6. 9.None

REVIEW STRUCTURE YEAR **0**

RENTAL? 0=NO 1=YES **1**

Sale Data

Sale Date

Price

Sale Type

1.Land 4.Mobile 7.
2.L & B 5.Other 8.
3.Building 6. 9.

Financing

1.Convent 4.Seller 7.
2.FHA/VA 5.Private 8.
3.Assumed 6.Cash 9.Unknown

Validity

1.Valid 4.Split 7.Changes
2.Related 5.Partial 8.Other
3.Distress 6.Exempt 9.Fr Ffclse

Verified

1.Buyer 4.Agent 7.Family
2.Seller 5.Pub Rec 8.Other
3.Lender 6.MLS 9.

Assessment Record

Year	Land	Buildings	Exempt	Total
2007	0	29,100	0	29,100
2008	0	29,100	0	29,100
2009	0	27,300	0	27,300
2010	0	27,300	0	27,300
2011	0	25,100	0	25,100
2012	0	23,500	0	23,500
2013	0	21,900	0	21,900
2014	0	21,800	0	21,800
2015	0	21,800	0	21,800
2018	0	21,800	0	21,800
2019	0	21,800	0	21,800
2020	0	21,800	0	21,800

Land Data

Front Foot	Type	Effective Frontage	Effective Depth	Influence Factor	Influence Code
11.Regular Lot				%	
12.Delta Triangle				%	
13.Nabla Triangle				%	
14.Rear Land				%	
15.Miscellaneous				%	
				%	
				%	
Square Foot		**Square Feet**			
16.Regular Lot				%	
17.Secondary Lot				%	
18.Excess Land				%	
19.Condominium				%	
20.Miscellaneous				%	
				%	
				%	
Fract. Acre		**Acreage/Sites**			
21.Homesite (Frac				%	
22.Baselot (Fract				%	
23.Misc (Fract)				%	
Acres				%	
24.Excess Acres 1				%	
25.Excess Acres 5				%	
26.Excess Acres 2				%	
27.Excess Acres 5				%	
28.Excess Acres 1				%	
29.Excess acres				%	

Total Acreage 0.00

Influence Codes

1.Unimproved
2.Excess Frtg
3.Topography
4.Size/Shape
5.Access
6.Restriction
7.Corner Infl
8.Environment
9.Fract Share
Acres
30.Industrial Sit
31.Working Waterf
32.Cultivated Cro
33.Pasture
34.Softwood (Farm
35.Mixed Wood (Fa
36.Hardwood (Farm
37.Softwood
38.Mixed Wood
39.Hardwood
40.Wasteland
41.Gravel Pit
42.Mobile Home Si
43.Location Base
44.Lot Improvemen
45.Waterfront A
46.Lobster Pound

Inspection Witnessed By:

X Date

No./Date	Description	Date Insp.

Notes:

Hancock 2020

Hancock 2020

Map Lot 110-021 | Account 211 | Location 4 VICTORY LANE | Card 2 Of 2 | 10/01/2020

Building Style		
0.Uncoded	4.Cape	8.Log
1.Conv.	5.Garrison	9.Other
2.Ranch	6.Colonial	10.Dutch C
3.R Ranch	7.Contemp	11.Farmhou

Dwelling Units
Other Units

Stories		
1.1	4.1.5	7.3.5
2.2	5.1.75	8.
3.3	6.2.5	9.

Exterior Walls		
0.Uncoded	4.Asbestos	8.Stone
1.Wood	5.Stucco	9.Other
2.Vin/Al	6.Brick Ve	10.Concret
3.Compos.	7.Solid Br	12.

Roof Surface		
1.Asphalt	4.Composit	7.
2.Slate	5.Wood	8.
3.Metal	6.Other	9.

SF Masonry Trim
OPEN-3-CUSTOM
OPEN-4-CUSTOM
Year Built
Year Remodeled

Foundation		
1.Concrete	4.Wood	7.
2.C Block	5.Slab	8.
3.Br/Stone	6.Piers	9.

Basement		
1.1/4 Bmt	4.Full Bmt	7.
2.1/2 Bmt	5.None	8.
3.3/4 Bmt	6.	9.None

Bsmt Gar # Cars

Wet Basement		
1.Dry	4.	7.
2.Damp	5.	8.
3.Wet	6.	9.

SF Bsmt Living
Fin Bsmt Grade
OPEN-5-CUSTOMIZE

Heat Type **100%**		
0.Uncoded	4.Steam	8.Fl/Wall
1.HWBB	5.FWA	9.No Heat
2.HWCI	6.GravWA	10.Radiabt
3.H Pump	7.Electric	12.

Cool Type **0%**		
1.Refrig	4.W&C Air	7.
2.Evapor	5.	8.
3.H Pump	6.	9.None

Kitchen Style		
1.Modern	4.Obsolete	7.
2.Typical	5.	8.
3.Old Type	6.	9.None

Bath(s) Style		
1.Modern	4.Obsolete	7.
2.Typical	5.	8.
3.Old Type	6.	9.None

Rooms
Bedrooms
Full Baths
Half Baths
Addn Fixtures
Fireplaces

TRIO Software
A Division of Harris Computer Systems

Layout		
1.Typical	4.	7.
2.Inadeq	5.	8.
3.Horrid	6.	9.

Attic		
1.1/4 Fin	4.Full Fin	7.
2.1/2 Fin	5.Fl/Stair	8.
3.3/4 Fin	6.	9.None

Insulation		
1.Full	4.Minimal	7.
2.Heavy	5.Partial	8.
3.Capped	6.	9.None

Unfinished %

Grade & Factor		
1.E Grade	4.B Grade	7.AAA Grad
2.D Grade	5.A Grade	8.SC Grade
3.C Grade	6.AA Grade	9.Same

SQFT (Footprint)

Condition		
1.Poor	4.Avg	7.V G
2.Fair	5.Avg+	8.Exc
3.Avg-	6.Good	9.Same

Phys. % Good
Funct. % Good

Functional Code		
1.Incomp	4.Delap	7.Seasonal
2.O-Built	5.Bsmt	8.
3.Fire	6.2014 ADJ	9.None

Econ. % Good

Economic Code		
0.None	3.No Power	7.
1.Location	4.Generate	8.
2.Encroach	9.None	9.

Entrance Code **0**		
1.Interior	4.Vacant	7.
2.Refusal	5.Estimate	8.
3.Informed	6.	9.

Information Code **0**		
1.Owner	4.Agent	7.
2.Relative	5.Estimate	8.
3.Tenant	6.Other	9.

Date Inspected

70.0'

14.0'

1982 14' x 70' OXFORD MOHO

SLAB

Additions, Outbuildings & Improvements

Type	Year	Units	Grade	Cond	Phys.	Funct.	Sound Value
998 14 Mobile Home	1982	14x70	3 100	4	0 %	100 %	
60 Concrete Slab	1982	924	3 100	4	0 %	100 %	
					%	%	
					%	%	
					%	%	
					%	%	
					%	%	
					%	%	
					%	%	
					%	%	

1.One Story Fram
2.Two Story Fram
3.Three Story Fr
4.1 & 1/2 Story
5.1 & 3/4 Story
6.2 & 1/2 Story
21.Open Frame Por
22.Encl Frame Por
23.Frame Garage
24.Frame Shed
25.Frame Bay Wind
26.1SFr Overhang
27.Unfin Basement
28.Unfinished Att
29.Finished Attic

Map Lot 110-022 Account 316 Location 37 HAMLIN LANE Card 1 Of 1 10/01/2020

WYLER, KARL O III
WYLER, MICHELLE P
37 HAMLIN LANE
HANCOCK ME 04640

B3506P208

Inspection Witnessed By:

X Date

No./Date	Description	Date Insp.

Notes:

Hancock 2020

Property Data

Neighborhood **18 Neighborhood 18**

Tree Growth Year **0**

TREE GROWTH RECERTIFY **0**

STATE SALE CODE **0**

Zone/Land Use **11 Residential**

Secondary Zone

Topography **9** **9**

1.Level 4.Below St 7.
2.Rolling 5.Low 8.
3.Above St 6.Swampy 9.

Utilities **9 None** **9 None**

1.Public 4.Dr Well 7.Cesspool
2.Water 5.Dug Well 8.
3.Sewer 6.Septic 9.None

Street **1 Paved**

1.Paved 4.Proposed 7.
2.Semi Imp 5. 8.
3.Gravel 6. 9.None

REVIEW STRUCTURE YEAR **2008**

RENTAL? 0=NO 1=YES **2**

Sale Data

Sale Date

Price

Sale Type

1.Land 4.Mobile 7.
2.L & B 5.Other 8.
3.Building 6. 9.

Financing

1.Convent 4.Seller 7.
2.FHA/VA 5.Private 8.
3.Assumed 6.Cash 9.Unknown

Validity

1.Valid 4.Split 7.Changes
2.Related 5.Partial 8.Other
3.Distress 6.Exempt 9.Fr Ffclse

Verified

1.Buyer 4.Agent 7.Family
2.Seller 5.Pub Rec 8.Other
3.Lender 6.MLS 9.

Assessment Record

Year	Land	Buildings	Exempt	Total
2007	63,500	172,000	0	235,500
2008	71,900	208,100	0	280,000
2009	71,900	208,100	0	280,000
2010	71,900	208,100	0	280,000
2011	71,900	208,100	0	280,000
2012	71,900	208,100	0	280,000
2013	71,900	208,100	0	280,000
2014	71,900	208,100	0	280,000
2015	71,900	208,100	0	280,000
2016	71,900	208,100	0	280,000
2017	71,900	208,100	0	280,000
2018	71,900	208,100	0	280,000
2019	71,900	208,100	0	280,000
2020	71,900	208,100	0	280,000

Land Data

Front Foot

11.Regular Lot
12.Delta Triangle
13.Nabla Triangle
14.Rear Land
15.Miscellaneous

Square Foot

16.Regular Lot
17.Secondary Lot
18.Excess Land
19.Condominium
20.Miscellaneous

Fract. Acre

21.Homesite (Frac
22.Baselot (Fract
23.Misc (Fract)
Acres
24.Excess Acres 1
25.Excess Acres 5
26.Excess Acres 2
27.Excess Acres 5
28.Excess Acres 1
29.Excess acres

Type	Effective Frontage	Effective Depth	Influence Factor	Influence Code
			%	
			%	
			%	
			%	
			%	
			%	
			%	
	Square Feet			
			%	
			%	
			%	
			%	
			%	
			%	
			%	
	Acreage/Sites			
21	1.00		100 %	0
24	4.00		100 %	0
40	2.40		100 %	0
44	1.00		100 %	0
25	3.00		100 %	0
			%	
			%	

Total Acreage 10.40

Influence Codes

1.Unimproved
2.Excess Frtg
3.Topography
4.Size/Shape
5.Access
6.Restriction
7.Corner Infl
8.Environment
9.Fract Share
Acres
30.Industrial Sit
31.Working Waterf
32.Cultivated Cro
33.Pasture
34.Softwood (Farm
35.Mixed Wood (Fa
36.Hardwood (Farm
37.Softwood
38.Mixed Wood
39.Hardwood
40.Wasteland
41.Gravel Pit
42.Mobile Home Si
43.Location Base
44.Lot Improvemen
45.Waterfront A
46.Lobster Pound

Hancock 2020

Map Lot 110-022 | Account 316 | Location 37 HAMLIN LANE | Card 1 Of 1 | 10/01/2020

Building Style	**1 Conventional**		
0.Uncoded	4.Cape	8.Log	
1.Conv.	5.Garrison	9.Other	
2.Ranch	6.Colonial	10.Dutch C	
3.R Ranch	7.Contemp	11.Farmhou	
Dwelling Units	**1**		
Other Units	**0**		
Stories	**4 One & 1/2 Story**		
1.1	4.1.5	7.3.5	
2.2	5.1.75	8.	
3.3	6.2.5	9.	
Exterior Walls	**1 Wood Siding**		
0.Uncoded	4.Asbestos	8.Stone	
1.Wood	5.Stucco	9.Other	
2.Vin/Al	6.Brick Ve	10.Concret	
3.Compos.	7.Solid Br	12.	
Roof Surface	**1 Asphalt Shingles**		
1.Asphalt	4.Composit	7.	
2.Slate	5.Wood	8.	
3.Metal	6.Other	9.	
SF Masonry Trim	**0**		
OPEN-3-CUSTOM	**0**		
OPEN-4-CUSTOM	**0**		
Year Built	**1790**		
Year Remodeled	**0**		
Foundation	**3 Brick &/or Stone**		
1.Concrete	4.Wood	7.	
2.C Block	5.Slab	8.	
3.Br/Stone	6.Piers	9.	
Basement	**2 1/2 Basement**		
1.1/4 Bmt	4.Full Bmt	7.	
2.1/2 Bmt	5.None	8.	
3.3/4 Bmt	6.	9.None	
Bsmt Gar # Cars	**0**		
Wet Basement	**2 Damp Basement**		
1.Dry	4.	7.	
2.Damp	5.	8.	
3.Wet	6.	9.	

SF Bsmt Living	**0**		
Fin Bsmt Grade	**0 0**		
OPEN-5-CUSTOMIZE	**0**		
Heat Type	**100%**	**5 Forced Warm Air**	
0.Uncoded	4.Steam	8.Fl/Wall	
1.HWBB	5.FWA	9.No Heat	
2.HWCI	6.GravWA	10.Radiabt	
3.H Pump	7.Electric	12.	
Cool Type	**100%**	**9 None**	
1.Refrig	4.W&C Air	7.	
2.Evapor	5.	8.	
3.H Pump	6.	9.None	
Kitchen Style	**2 Typical**		
1.Modern	4.Obsolete	7.	
2.Typical	5.	8.	
3.Old Type	6.	9.None	
Bath(s) Style	**2 Typical Bath(s)**		
1.Modern	4.Obsolete	7.	
2.Typical	5.	8.	
3.Old Type	6.	9.None	
# Rooms	**7**		
# Bedrooms	**4**		
# Full Baths	**2**		
# Half Baths	**1**		
# Addn Fixtures	**0**		
# Fireplaces	**2**		

TRIO Software
A Division of Harris Computer Systems

Layout	**1 Typical**		
1.Typical	4.	7.	
2.Inadeq	5.	8.	
3.Horrid	6.	9.	
Attic	**2 1/2 Finished**		
1.1/4 Fin	4.Full Fin	7.	
2.1/2 Fin	5.Fl/Stair	8.	
3.3/4 Fin	6.	9.None	
Insulation	**1 Full**		
1.Full	4.Minimal	7.	
2.Heavy	5.Partial	8.	
3.Capped	6.	9.None	
Unfinished %	**0%**		
Grade & Factor	**3 Average 100%**		
1.E Grade	4.B Grade	7.AAA Grad	
2.D Grade	5.A Grade	8.SC Grade	
3.C Grade	6.AA Grade	9.Same	
SQFT (Footprint)	**1162**		
Condition	**8 Excellent**		
1.Poor	4.Avg	7.V G	
2.Fair	5.Avg+	8.Exc	
3.Avg-	6.Good	9.Same	
Phys. % Good	**0%**		
Funct. % Good	**100%**		
Functional Code	**9 None**		
1.Incomp	4.Delap	7.Seasonal	
2.O-Built	5.Bsmt	8.	
3.Fire	6.2014 ADJ	9.None	
Econ. % Good	**100%**		
Economic Code	**None**		
0.None	3.No Power	7.	
1.Location	4.Generate	8.	
2.Encroach	9.None	9.	
Entrance Code	**0**		
1.Interior	4.Vacant	7.	
2.Refusal	5.Estimate	8.	
3.Informed	6.	9.	
Information Code	**0**		
1.Owner	4.Agent	7.	
2.Relative	5.Estimate	8.	
3.Tenant	6.Other	9.	

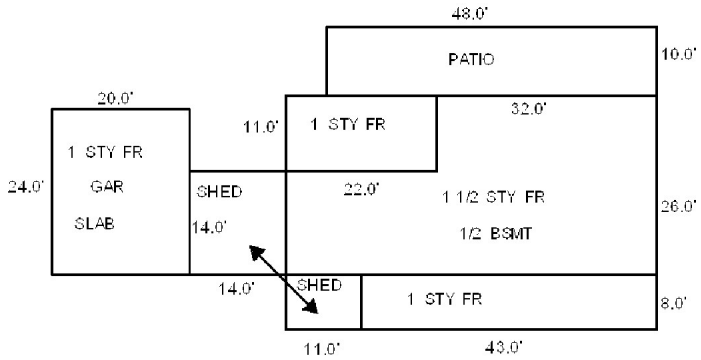

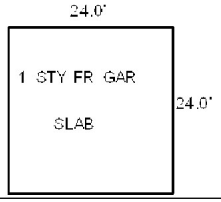

Date Inspected

Additions, Outbuildings & Improvements

Type	Year	Units	Grade	Cond	Phys.	Funct.	Sound Value
1 One Story Frame	0	220	0 0	0	0 %	0 %	
21 Open Frame	0	344	0 0	0	0 %	0 %	
24 Frame Shed	0	284	0 0	0	0 %	0 %	
81 1 SF GARAGE	0	480	0 0	0	0 %	0 %	
62 Carport (Gable)	0	480	0 0	0	0 %	0 %	
81 1 SF GARAGE	0	576	0 0	0	0 %	0 %	
					%	%	
					%	%	
					%	%	
					%	%	

1.One Story Fram
2.Two Story Fram
3.Three Story Fr
4.1 & 1/2 Story
5.1 & 3/4 Story
6.2 & 1/2 Story
21.Open Frame Por
22.Encl Frame Por
23.Frame Garage
24.Frame Shed
25.Frame Bay Wind
26.1SFr Overhang
27.Unfin Basement
28.Unfinished Att
29.Finished Attic

Map Lot 110-023 Account 1384 Location EASTSIDE ROAD Card 1 Of 1 10/01/2020

MORONG, CANDACE J
MORONG, BENNETT K.
859 U.S. ROUTE 1
YORK ME 03909 3835

B3693P95

Property Data

Neighborhood **18 Neighborhood 18**

Tree Growth Year **0**

TREE GROWTH RECERTIFY **0**

STATE SALE CODE **0**

Zone/Land Use **11 Residential**

Secondary Zone

Topography

1.Level	4.Below St	7.
2.Rolling	5.Low	8.
3.Above St	6.Swampy	9.

Utilities

1.Public	4.Dr Well	7.Cesspool
2.Water	5.Dug Well	8.
3.Sewer	6.Septic	9.None

Street

1.Paved	4.Proposed	7.
2.Semi Imp	5.	8.
3.Gravel	6.	9.None

REVIEW STRUCTURE YEAR **0**

RENTAL? 0=NO 1=YES **0**

Sale Data

Sale Date

Price

Sale Type

1.Land	4.Mobile	7.
2.L & B	5.Other	8.
3.Building	6.	9.

Financing

1.Convent	4.Seller	7.
2.FHA/VA	5.Private	8.
3.Assumed	6.Cash	9.Unknown

Validity

1.Valid	4.Split	7.Changes
2.Related	5.Partial	8.Other
3.Distress	6.Exempt	9.Fr Ffclse

Verified

1.Buyer	4.Agent	7.Family
2.Seller	5.Pub Rec	8.Other
3.Lender	6.MLS	9.

Assessment Record

Year	Land	Buildings	Exempt	Total
2007	46,100	0	0	46,100
2008	48,900	0	0	48,900
2009	48,900	0	0	48,900
2010	48,900	0	0	48,900
2011	48,900	0	0	48,900
2012	48,900	0	0	48,900
2013	48,900	0	0	48,900
2014	48,900	0	0	48,900
2015	48,900	0	0	48,900
2016	48,900	0	0	48,900
2017	48,900	0	0	48,900
2018	48,900	0	0	48,900
2019	48,900	0	0	48,900
2020	48,900	0	0	48,900

Land Data

Front Foot	Type	Effective Frontage	Effective Depth	Influence Factor	Influence Code
11.Regular Lot				%	
12.Delta Triangle				%	
13.Nabla Triangle				%	
14.Rear Land				%	
15.Miscellaneous				%	
				%	
				%	
Square Foot		**Square Feet**			
16.Regular Lot				%	
17.Secondary Lot				%	
18.Excess Land				%	
19.Condominium				%	
20.Miscellaneous				%	
				%	
				%	
Fract. Acre		**Acreage/Sites**			
21.Homesite (Frac	21	1.00	100	%	0
22.Baselot (Fract	24	4.00	100	%	0
23.Misc (Fract)	40	1.30	100	%	0
Acres	25	1.00	100	%	0
24.Excess Acres 1				%	
25.Excess Acres 5				%	
26.Excess Acres 2				%	
27.Excess Acres 5					
28.Excess Acres 1					
29.Excess acres					

Total Acreage 7.30

Influence Codes

1.Unimproved
2.Excess Frtg
3.Topography
4.Size/Shape
5.Access
6.Restriction
7.Corner Infl
8.Environment
9.Fract Share
Acres
30.Industrial Sit
31.Working Waterf
32.Cultivated Cro
33.Pasture
34.Softwood (Farm
35.Mixed Wood (Fa
36.Hardwood (Farm
37.Softwood
38.Mixed Wood
39.Hardwood
40.Wasteland
41.Gravel Pit
42.Mobile Home Si
43.Location Base
44.Lot Improvemen
45.Waterfront A
46.Lobster Pound

Inspection Witnessed By:

X Date

No./Date	Description	Date Insp.

Notes:

Hancock 2020

Hancock 2020

Map Lot 110-023 | Account 1384 | Location EASTSIDE ROAD | Card 1 Of 1 | 10/01/2020

Building Style		
0.Uncoded	4.Cape	8.Log
1.Conv.	5.Garrison	9.Other
2.Ranch	6.Colonial	10.Dutch C
3.R Ranch	7.Contemp	11.Farmhou

Dwelling Units
Other Units

Stories		
1.1	4.1.5	7.3.5
2.2	5.1.75	8.
3.3	6.2.5	9.

Exterior Walls		
0.Uncoded	4.Asbestos	8.Stone
1.Wood	5.Stucco	9.Other
2.Vin/Al	6.Brick Ve	10.Concret
3.Compos.	7.Solid Br	12.

Roof Surface		
1.Asphalt	4.Composit	7.
2.Slate	5.Wood	8.
3.Metal	6.Other	9.

SF Masonry Trim
OPEN-3-CUSTOM
OPEN-4-CUSTOM
Year Built
Year Remodeled

Foundation		
1.Concrete	4.Wood	7.
2.C Block	5.Slab	8.
3.Br/Stone	6.Piers	9.

Basement		
1.1/4 Bmt	4.Full Bmt	7.
2.1/2 Bmt	5.None	8.
3.3/4 Bmt	6.	9.None

Bsmt Gar # Cars

Wet Basement		
1.Dry	4.	7.
2.Damp	5.	8.
3.Wet	6.	9.

SF Bsmt Living
Fin Bsmt Grade
OPEN-5-CUSTOMIZE

Heat Type **100%**		
0.Uncoded	4.Steam	8.Fl/Wall
1.HWBB	5.FWA	9.No Heat
2.HWCI	6.GravWA	10.Radiabt
3.H Pump	7.Electric	12.

Cool Type **100%**		
1.Refrig	4.W&C Air	7.
2.Evapor	5.	8.
3.H Pump	6.	9.None

Kitchen Style		
1.Modern	4.Obsolete	7.
2.Typical	5.	8.
3.Old Type	6.	9.None

Bath(s) Style		
1.Modern	4.Obsolete	7.
2.Typical	5.	8.
3.Old Type	6.	9.None

Rooms
Bedrooms
Full Baths
Half Baths
Addn Fixtures
Fireplaces

TRIO Software
A Division of Harris Computer Systems

Layout		
1.Typical	4.	7.
2.Inadeq	5.	8.
3.Horrid	6.	9.

Attic		
1.1/4 Fin	4.Full Fin	7.
2.1/2 Fin	5.Fl/Stair	8.
3.3/4 Fin	6.	9.None

Insulation		
1.Full	4.Minimal	7.
2.Heavy	5.Partial	8.
3.Capped	6.	9.None

Unfinished %

Grade & Factor		
1.E Grade	4.B Grade	7.AAA Grad
2.D Grade	5.A Grade	8.SC Grade
3.C Grade	6.AA Grade	9.Same

SQFT (Footprint)

Condition		
1.Poor	4.Avg	7.V G
2.Fair	5.Avg+	8.Exc
3.Avg-	6.Good	9.Same

Phys. % Good
Funct. % Good

Functional Code		
1.Incomp	4.Delap	7.Seasonal
2.O-Built	5.Bsmt	8.
3.Fire	6.2014 ADJ	9.None

Econ. % Good

Economic Code		
0.None	3.No Power	7.
1.Location	4.Generate	8.
2.Encroach	9.None	9.

Entrance Code **0**		
1.Interior	4.Vacant	7.
2.Refusal	5.Estimate	8.
3.Informed	6.	9.

Information Code **0**		
1.Owner	4.Agent	7.
2.Relative	5.Estimate	8.
3.Tenant	6.Other	9.

Date Inspected

Additions, Outbuildings & Improvements

Type	Year	Units	Grade	Cond	Phys.	Funct.	Sound Value
					%	%	
					%	%	
					%	%	
					%	%	
					%	%	
					%	%	
					%	%	
					%	%	
					%	%	
					%	%	

1.One Story Fram
2.Two Story Fram
3.Three Story Fr
4.1 & 1/2 Story
5.1 & 3/4 Story
6.2 & 1/2 Story
21.Open Frame Por
22.Encl Frame Por
23.Frame Garage
24.Frame Shed
25.Frame Bay Wind
26.1SFr Overhang
27.Unfin Basement
28.Unfinished Att
29.Finished Attic

Map Lot 110-024 Account 1343 Location 34 HAMLIN LANE Card 1 Of 1 10/01/2020

SIMPSON, JOSEPH R
SIMPSON, ELEANOR P
11228 MOSLEY FARM COURT
ST. LOUIS MO 63141 7662

B1855P209

Property Data

Neighborhood **18 Neighborhood 18**

Tree Growth Year **0**

TREE GROWTH RECERTIFY **0**

STATE SALE CODE **0**

Zone/Land Use **11 Residential**

Secondary Zone

Topography

1.Level	4.Below St	7.
2.Rolling	5.Low	8.
3.Above St	6.Swampy	9.

Utilities

1.Public	4.Dr Well	7.Cesspool
2.Water	5.Dug Well	8.
3.Sewer	6.Septic	9.None

Street **1 Paved**

1.Paved	4.Proposed	7.
2.Semi Imp	5.	8.
3.Gravel	6.	9.None

REVIEW STRUCTURE YEAR **0**

RENTAL? 0=NO 1=YES **0**

Sale Data

Sale Date

Price

Sale Type

1.Land	4.Mobile	7.
2.L & B	5.Other	8.
3.Building	6.	9.

Financing

1.Convent	4.Seller	7.
2.FHA/VA	5.Private	8.
3.Assumed	6.Cash	9.Unknown

Validity

1.Valid	4.Split	7.Changes
2.Related	5.Partial	8.Other
3.Distress	6.Exempt	9.Fr Ffclse

Verified

1.Buyer	4.Agent	7.Family
2.Seller	5.Pub Rec	8.Other
3.Lender	6.MLS	9.

Assessment Record

Year	Land	Buildings	Exempt	Total
2007	61,400	159,700	0	221,100
2008	65,000	159,700	0	224,700
2009	65,000	159,700	0	224,700
2010	65,000	159,700	0	224,700
2011	65,000	159,700	0	224,700
2012	65,000	159,700	0	224,700
2013	65,000	159,700	0	224,700
2014	65,000	159,700	0	224,700
2015	65,000	159,700	0	224,700
2016	65,000	159,700	0	224,700
2017	65,000	157,800	0	222,800
2018	65,000	157,800	0	222,800
2019	65,000	157,800	0	222,800
2020	65,000	157,800	0	222,800

Land Data

Front Foot	Type	Effective Frontage	Effective Depth	Influence Factor	Influence Code
11.Regular Lot				%	
12.Delta Triangle				%	
13.Nabla Triangle				%	
14.Rear Land				%	
15.Miscellaneous				%	
				%	
				%	
Square Foot		**Square Feet**			
16.Regular Lot				%	
17.Secondary Lot				%	
18.Excess Land				%	
19.Condominium				%	
20.Miscellaneous				%	
				%	
				%	
Fract. Acre		**Acreage/Sites**			
21.Homesite (Frac	21	1.00	100	%	0
22.Baselot (Fract	24	4.00	100	%	0
23.Misc (Fract)	44	1.00	100	%	0
Acres	25	1.30	100	%	0
24.Excess Acres 1				%	
25.Excess Acres 5				%	
26.Excess Acres 2				%	
27.Excess Acres 5					
28.Excess Acres 1					
29.Excess acres					

Total Acreage 6.30

Influence Codes

1.Unimproved
2.Excess Frtg
3.Topography
4.Size/Shape
5.Access
6.Restriction
7.Corner Infl
8.Environment
9.Fract Share
Acres
30.Industrial Sit
31.Working Waterf
32.Cultivated Cro
33.Pasture
34.Softwood (Farm
35.Mixed Wood (Fa
36.Hardwood (Farm
37.Softwood
38.Mixed Wood
39.Hardwood
40.Wasteland
41.Gravel Pit
42.Mobile Home Si
43.Location Base
44.Lot Improvemen
45.Waterfront A
46.Lobster Pound

Inspection Witnessed By:

X Date

No./Date	Description	Date Insp.

Notes:

Hancock 2020

Hancock 2020

Map Lot 110-024 | Account 1343 | Location 34 HAMLIN LANE | Card 1 Of 1 | 10/01/2020

Building Style	**1 Conventional**	
0.Uncoded	4.Cape	8.Log
1.Conv.	5.Garrison	9.Other
2.Ranch	6.Colonial	10.Dutch C
3.R Ranch	7.Contemp	11.Farmhou
Dwelling Units	**1**	
Other Units	**0**	
Stories	**1 One Story**	
1.1	4.1.5	7.3.5
2.2	5.1.75	8.
3.3	6.2.5	9.
Exterior Walls	**1 Wood Siding**	
0.Uncoded	4.Asbestos	8.Stone
1.Wood	5.Stucco	9.Other
2.Vin/Al	6.Brick Ve	10.Concret
3.Compos.	7.Solid Br	12.
Roof Surface	**1 Asphalt Shingles**	
1.Asphalt	4.Composit	7.
2.Slate	5.Wood	8.
3.Metal	6.Other	9.
SF Masonry Trim	**0**	
OPEN-3-CUSTOM	**0**	
OPEN-4-CUSTOM	**0**	
Year Built	**1988**	
Year Remodeled	**0**	
Foundation	**1 Concrete**	
1.Concrete	4.Wood	7.
2.C Block	5.Slab	8.
3.Br/Stone	6.Piers	9.
Basement	**1 1/4 Basement**	
1.1/4 Bmt	4.Full Bmt	7.
2.1/2 Bmt	5.None	8.
3.3/4 Bmt	6.	9.None
Bsmt Gar # Cars	**0**	
Wet Basement	**2 Damp Basement**	
1.Dry	4.	7.
2.Damp	5.	8.
3.Wet	6.	9.

SF Bsmt Living	**0**	
Fin Bsmt Grade	**0 0**	
OPEN-5-CUSTOMIZE	**0**	
Heat Type	**100%**	**1 Hot Water BB**
0.Uncoded	4.Steam	8.Fl/Wall
1.HWBB	5.FWA	9.No Heat
2.HWCI	6.GravWA	10.Radiabt
3.H Pump	7.Electric	12.
Cool Type	**100%**	**9 None**
1.Refrig	4.W&C Air	7.
2.Evapor	5.	8.
3.H Pump	6.	9.None
Kitchen Style	**2 Typical**	
1.Modern	4.Obsolete	7.
2.Typical	5.	8.
3.Old Type	6.	9.None
Bath(s) Style	**2 Typical Bath(s)**	
1.Modern	4.Obsolete	7.
2.Typical	5.	8.
3.Old Type	6.	9.None
# Rooms	**5**	
# Bedrooms	**2**	
# Full Baths	**2**	
# Half Baths	**0**	
# Addn Fixtures	**1**	
# Fireplaces	**0**	

TRIO Software
A Division of Harris Computer Systems

Layout	**1 Typical**	
1.Typical	4.	7.
2.Inadeq	5.	8.
3.Horrid	6.	9.
Attic	**9 None**	
1.1/4 Fin	4.Full Fin	7.
2.1/2 Fin	5.Fl/Stair	8.
3.3/4 Fin	6.	9.None
Insulation	**1 Full**	
1.Full	4.Minimal	7.
2.Heavy	5.Partial	8.
3.Capped	6.	9.None
Unfinished %	**0%**	
Grade & Factor	**3 Average 100%**	
1.E Grade	4.B Grade	7.AAA Grad
2.D Grade	5.A Grade	8.SC Grade
3.C Grade	6.AA Grade	9.Same
SQFT (Footprint)	**1532**	
Condition	**4 Average**	
1.Poor	4.Avg	7.V G
2.Fair	5.Avg+	8.Exc
3.Avg-	6.Good	9.Same
Phys. % Good	**0%**	
Funct. % Good	**100%**	
Functional Code	**9 None**	
1.Incomp	4.Delap	7.Seasonal
2.O-Built	5.Bsmt	8.
3.Fire	6.2014 ADJ	9.None
Econ. % Good	**100%**	
Economic Code	**None**	
0.None	3.No Power	7.
1.Location	4.Generate	8.
2.Encroach	9.None	9.
Entrance Code	**0**	
1.Interior	4.Vacant	7.
2.Refusal	5.Estimate	8.
3.Informed	6.	9.
Information Code	**0**	
1.Owner	4.Agent	7.
2.Relative	5.Estimate	8.
3.Tenant	6.Other	9.

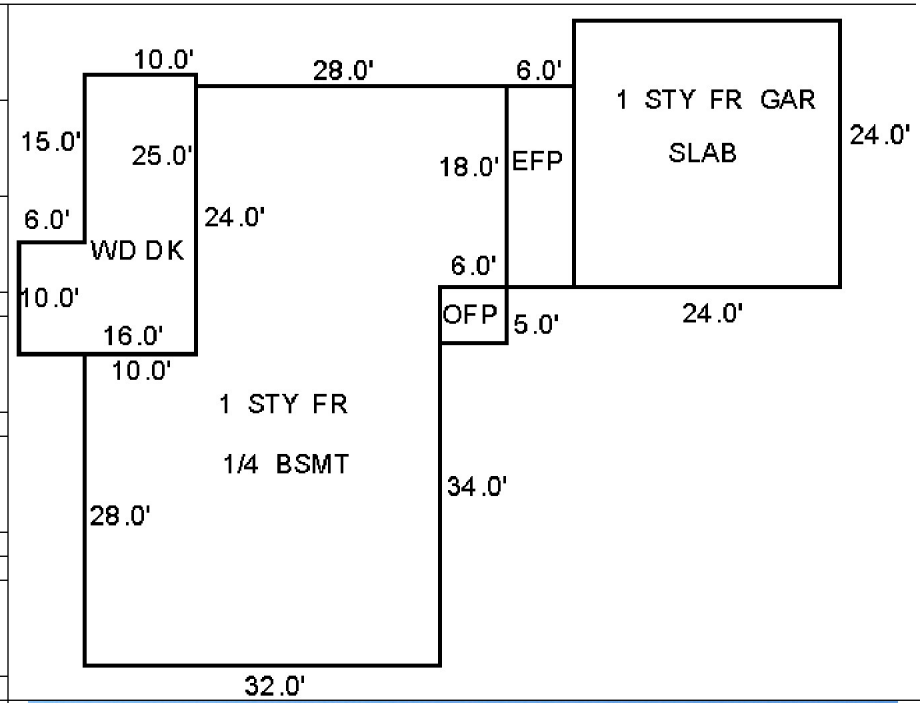

Date Inspected

Additions, Outbuildings & Improvements

Type	Year	Units	Grade	Cond	Phys.	Funct.	Sound Value
81 1 SF GARAGE	0	576	0 0	0	0 %	0 %	
22 Encl Frame Porch	0	108	0 0	0	0 %	0 %	
21 Open Frame	0	30	0 0	0	0 %	0 %	
68 Wood Deck	0	310	0 0	0	0 %	0 %	
					%	%	
					%	%	
					%	%	
					%	%	
					%	%	
					%	%	

1.One Story Fram
2.Two Story Fram
3.Three Story Fr
4.1 & 1/2 Story
5.1 & 3/4 Story
6.2 & 1/2 Story
21.Open Frame Por
22.Encl Frame Por
23.Frame Garage
24.Frame Shed
25.Frame Bay Wind
26.1SFr Overhang
27.Unfin Basement
28.Unfinished Att
29.Finished Attic

Map Lot 110-025 Account 1499 Location 143 JELLISON COVE ROAD Card 1 Of 1 10/01/2020

STETSON, ANN (TIC)
GOFF, LINDA (TIC) & STETSON, WILLIAM, JR (TIC)
PO BOX 1501
BANGOR ME 04402 1501

B1781P617

Previous Owner
STETSON, WILLIAM (L/T)
354 N. MAIN STREET

BREWER ME 04412
Sale Date: 8/10/2017

Inspection Witnessed By:

X Date

No./Date	Description	Date Insp.

Notes:

REMAINDERMEN: ANN STETSON; LINDA GOFF; WILLIAM S STETSON, JR; ALL AS TIC

Hancock 2020

Property Data

Neighborhood **19 Neighborhood 19**

Tree Growth Year **0**

TREE GROWTH RECERTIFY **0**

STATE SALE CODE **0**

Zone/Land Use **11 Residential**

Secondary Zone

Topography

1.Level 4.Below St 7.
2.Rolling 5.Low 8.
3.Above St 6.Swampy 9.

Utilities

1.Public 4.Dr Well 7.Cesspool
2.Water 5.Dug Well 8.
3.Sewer 6.Septic 9.None

Street **1 Paved**

1.Paved 4.Proposed 7.
2.Semi Imp 5. 8.
3.Gravel 6. 9.None

REVIEW STRUCTURE YEAR **0**

RENTAL? 0=NO 1=YES **0**

Sale Data

Sale Date

Price

Sale Type

1.Land 4.Mobile 7.
2.L & B 5.Other 8.
3.Building 6. 9.

Financing

1.Convent 4.Seller 7.
2.FHA/VA 5.Private 8.
3.Assumed 6.Cash 9.Unknown

Validity

1.Valid 4.Split 7.Changes
2.Related 5.Partial 8.Other
3.Distress 6.Exempt 9.Fr Ffclse

Verified

1.Buyer 4.Agent 7.Family
2.Seller 5.Pub Rec 8.Other
3.Lender 6.MLS 9.

Assessment Record

Year	Land	Buildings	Exempt	Total
2007	255,100	101,100	0	356,200
2008	255,100	101,100	0	356,200
2009	255,100	101,100	0	356,200
2010	255,100	101,100	0	356,200
2011	255,100	101,100	0	356,200
2012	255,100	101,100	0	356,200
2013	255,100	101,100	0	356,200
2014	255,100	101,100	0	356,200
2015	255,100	101,100	0	356,200
2016	255,100	101,100	0	356,200
2017	255,100	99,800	0	354,900
2018	255,100	99,800	0	354,900
2019	255,100	99,800	0	354,900
2020	255,100	99,800	0	354,900

Land Data

Front Foot	Type	Effective Frontage	Effective Depth	Influence Factor	Influence Code
11.Regular Lot				%	
12.Delta Triangle				%	
13.Nabla Triangle				%	
14.Rear Land				%	
15.Miscellaneous				%	
				%	
				%	
Square Foot		**Square Feet**			
16.Regular Lot				%	
17.Secondary Lot				%	
18.Excess Land				%	
19.Condominium				%	
20.Miscellaneous				%	
				%	
				%	
Fract. Acre		**Acreage/Sites**			
21.Homesite (Frac	21	1.00	100	%	0
22.Baselot (Fract	40	1.90	100	%	0
23.Misc (Fract)	44	1.00	100	%	0
Acres	45	160.00	100	%	0
24.Excess Acres 1				%	
25.Excess Acres 5				%	
26.Excess Acres 2				%	
27.Excess Acres 5				%	
28.Excess Acres 1					
29.Excess acres					

Total Acreage 2.90

Influence Codes

1.Unimproved
2.Excess Frtg
3.Topography
4.Size/Shape
5.Access
6.Restriction
7.Corner Infl
8.Environment
9.Fract Share
Acres
30.Industrial Sit
31.Working Waterf
32.Cultivated Cro
33.Pasture
34.Softwood (Farm
35.Mixed Wood (Fa
36.Hardwood (Farm
37.Softwood
38.Mixed Wood
39.Hardwood
40.Wasteland
41.Gravel Pit
42.Mobile Home Si
43.Location Base
44.Lot Improvemen
45.Waterfront A
46.Lobster Pound

Hancock 2020

Map Lot 110-025 | Account 1499 | Location 143 JELLISON COVE ROAD | Card 1 Of 1 | 10/01/2020

Building Style **1 Conventional**		
0.Uncoded	4.Cape	8.Log
1.Conv.	5.Garrison	9.Other
2.Ranch	6.Colonial	10.Dutch C
3.R Ranch	7.Contemp	11.Farmhou
Dwelling Units **1**		
Other Units **0**		
Stories **5 One & 3/4 Story**		
1.1	4.1.5	7.3.5
2.2	5.1.75	8.
3.3	6.2.5	9.
Exterior Walls **1 Wood Siding**		
0.Uncoded	4.Asbestos	8.Stone
1.Wood	5.Stucco	9.Other
2.Vin/Al	6.Brick Ve	10.Concret
3.Compos.	7.Solid Br	12.
Roof Surface **1 Asphalt Shingles**		
1.Asphalt	4.Composit	7.
2.Slate	5.Wood	8.
3.Metal	6.Other	9.
SF Masonry Trim **0**		
OPEN-3-CUSTOM **0**		
OPEN-4-CUSTOM **0**		
Year Built **1960**		
Year Remodeled **0**		
Foundation **6 Piers**		
1.Concrete	4.Wood	7.
2.C Block	5.Slab	8.
3.Br/Stone	6.Piers	9.
Basement **9 No Basement**		
1.1/4 Bmt	4.Full Bmt	7.
2.1/2 Bmt	5.None	8.
3.3/4 Bmt	6.	9.None
Bsmt Gar # Cars **0**		
Wet Basement **9 No Basement**		
1.Dry	4.	7.
2.Damp	5.	8.
3.Wet	6.	9.

SF Bsmt Living **0**		
Fin Bsmt Grade **0 0**		
OPEN-5-CUSTOMIZE **0**		
Heat Type **100%** **9 Not Heated**		
0.Uncoded	4.Steam	8.Fl/Wall
1.HWBB	5.FWA	9.No Heat
2.HWCI	6.GravWA	10.Radiabt
3.H Pump	7.Electric	12.
Cool Type **100%** **9 None**		
1.Refrig	4.W&C Air	7.
2.Evapor	5.	8.
3.H Pump	6.	9.None
Kitchen Style **2 Typical**		
1.Modern	4.Obsolete	7.
2.Typical	5.	8.
3.Old Type	6.	9.None
Bath(s) Style **2 Typical Bath(s)**		
1.Modern	4.Obsolete	7.
2.Typical	5.	8.
3.Old Type	6.	9.None
# Rooms **3**		
# Bedrooms **2**		
# Full Baths **1**		
# Half Baths **0**		
# Addn Fixtures **0**		
# Fireplaces **0**		

TRIO Software
A Division of Harris Computer Systems

Layout **1 Typical**		
1.Typical	4.	7.
2.Inadeq	5.	8.
3.Horrid	6.	9.
Attic **9 None**		
1.1/4 Fin	4.Full Fin	7.
2.1/2 Fin	5.Fl/Stair	8.
3.3/4 Fin	6.	9.None
Insulation **1 Full**		
1.Full	4.Minimal	7.
2.Heavy	5.Partial	8.
3.Capped	6.	9.None
Unfinished % **0%**		
Grade & Factor **3 Average 100%**		
1.E Grade	4.B Grade	7.AAA Grad
2.D Grade	5.A Grade	8.SC Grade
3.C Grade	6.AA Grade	9.Same
SQFT (Footprint) **480**		
Condition **5 Above Average**		
1.Poor	4.Avg	7.V G
2.Fair	5.Avg+	8.Exc
3.Avg-	6.Good	9.Same
Phys. % Good **0%**		
Funct. % Good **100%**		
Functional Code **9 None**		
1.Incomp	4.Delap	7.Seasonal
2.O-Built	5.Bsmt	8.
3.Fire	6.2014 ADJ	9.None
Econ. % Good **100%**		
Economic Code **None**		
0.None	3.No Power	7.
1.Location	4.Generate	8.
2.Encroach	9.None	9.
Entrance Code **0**		
1.Interior	4.Vacant	7.
2.Refusal	5.Estimate	8.
3.Informed	6.	9.
Information Code **0**		
1.Owner	4.Agent	7.
2.Relative	5.Estimate	8.
3.Tenant	6.Other	9.

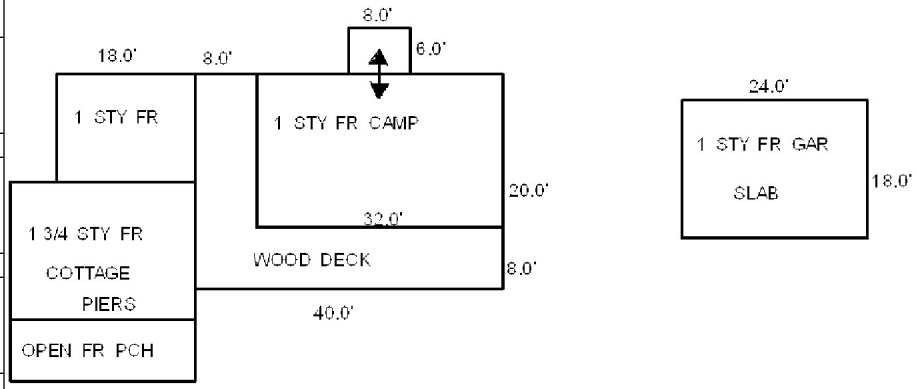

Date Inspected

Additions, Outbuildings & Improvements

Type	Year	Units	Grade	Cond	Phys.	Funct.	Sound Value
81 1 SF GARAGE	2005	432	0 0	0	0 %	0 %	
1 One Story Frame	0	252	0 0	0	0 %	0 %	
21 Open Frame	0	192	0 0	0	0 %	0 %	
68 Wood Deck	0	480	0 0	0	0 %	0 %	
616 Cottage Average	0	688	0 0	0	0 %	0 %	
					%	%	
					%	%	
					%	%	
					%	%	
					%	%	

1.One Story Fram
2.Two Story Fram
3.Three Story Fr
4.1 & 1/2 Story
5.1 & 3/4 Story
6.2 & 1/2 Story
21.Open Frame Por
22.Encl Frame Por
23.Frame Garage
24.Frame Shed
25.Frame Bay Wind
26.1SFr Overhang
27.Unfin Basement
28.Unfinished Att
29.Finished Attic