Map Lot 106-001 Account 167 Location 62 FOX ROAD Card 1 Of 1 10/01/2020

BURNETT, BENJAMIN & PETER & RUSSELL
C/O PETER BURNETT
PO BOX 359
HANCOCK ME 04640

B623P315 B2553P12

Property Data

Neighborhood **11 Neighborhood 11**

Tree Growth Year **0**

TREE GROWTH RECERTIFY **0**

STATE SALE CODE **0**

Zone/Land Use **11 Residential**

Secondary Zone

Topography **9** **9**

1.Level 4.Below St 7.
2.Rolling 5.Low 8.
3.Above St 6.Swampy 9.

Utilities **9 None** **9 None**

1.Public 4.Dr Well 7.Cesspool
2.Water 5.Dug Well 8.
3.Sewer 6.Septic 9.None

Street **1 Paved**

1.Paved 4.Proposed 7.
2.Semi Imp 5. 8.
3.Gravel 6. 9.None

REVIEW STRUCTURE YEAR **0**

RENTAL? 0=NO 1=YES **0**

Sale Data

Sale Date

Price

Sale Type

1.Land 4.Mobile 7.
2.L & B 5.Other 8.
3.Building 6. 9.

Financing

1.Convent 4.Seller 7.
2.FHA/VA 5.Private 8.
3.Assumed 6.Cash 9.Unknown

Validity

1.Valid 4.Split 7.Changes
2.Related 5.Partial 8.Other
3.Distress 6.Exempt 9.Fr Ffclse

Verified

1.Buyer 4.Agent 7.Family
2.Seller 5.Pub Rec 8.Other
3.Lender 6.MLS 9.

Assessment Record

Year	Land	Buildings	Exempt	Total
2007	447,200	90,600	0	537,800
2008	461,200	90,600	0	551,800
2009	461,200	90,600	0	551,800
2010	461,200	90,600	0	551,800
2011	461,200	90,600	0	551,800
2012	461,200	90,600	0	551,800
2013	461,200	90,600	0	551,800
2014	461,200	90,600	0	551,800
2015	461,200	90,600	0	551,800
2016	461,200	90,600	0	551,800
2017	461,200	90,600	0	551,800
2018	461,200	90,600	0	551,800
2019	461,200	90,600	0	551,800
2020	461,200	90,600	0	551,800

Land Data

Front Foot

11.Regular Lot
12.Delta Triangle
13.Nabla Triangle
14.Rear Land
15.Miscellaneous

Square Foot

16.Regular Lot
17.Secondary Lot
18.Excess Land
19.Condominium
20.Miscellaneous

Fract. Acre

21.Homesite (Frac
22.Baselot (Fract
23.Misc (Fract)
Acres
24.Excess Acres 1
25.Excess Acres 5
26.Excess Acres 2
27.Excess Acres 5
28.Excess Acres 1
29.Excess acres

Type	Effective Frontage	Effective Depth	Influence Factor	Influence Code
			%	
			%	
			%	
			%	
			%	
			%	
			%	
	Square Feet			
			%	
			%	
			%	
			%	
			%	
			%	
			%	
	Acreage/Sites			
21	1.00		100 %	0
24	4.00		100 %	0
40	4.80		100 %	0
44	1.00		100 %	0
45	260.00		100 %	0
43	1.00		100 %	0
25	4.00		100 %	0

Total Acreage 13.80

Influence Codes

1.Unimproved
2.Excess Frtg
3.Topography
4.Size/Shape
5.Access
6.Restriction
7.Corner Infl
8.Environment
9.Fract Share
Acres
30.Industrial Sit
31.Working Waterf
32.Cultivated Cro
33.Pasture
34.Softwood (Farm
35.Mixed Wood (Fa
36.Hardwood (Farm
37.Softwood
38.Mixed Wood
39.Hardwood
40.Wasteland
41.Gravel Pit
42.Mobile Home Si
43.Location Base
44.Lot Improvemen
45.Waterfront A
46.Lobster Pound

Inspection Witnessed By:

X Date

No./Date	Description	Date Insp.

Notes:

Hancock 2020

Hancock 2020

Map Lot 106-001 | Account 167 | Location 62 FOX ROAD | Card 1 Of 1 | 10/01/2020

Building Style	**1 Conventional**	
0.Uncoded	4.Cape	8.Log
1.Conv.	5.Garrison	9.Other
2.Ranch	6.Colonial	10.Dutch C
3.R Ranch	7.Contemp	11.Farmhou
Dwelling Units	**1**	
Other Units	**0**	
Stories	**2 Two Story**	
1.1	4.1.5	7.3.5
2.2	5.1.75	8.
3.3	6.2.5	9.
Exterior Walls	**1 Wood Siding**	
0.Uncoded	4.Asbestos	8.Stone
1.Wood	5.Stucco	9.Other
2.Vin/Al	6.Brick Ve	10.Concret
3.Compos.	7.Solid Br	12.
Roof Surface	**1 Asphalt Shingles**	
1.Asphalt	4.Composit	7.
2.Slate	5.Wood	8.
3.Metal	6.Other	9.
SF Masonry Trim	**0**	
OPEN-3-CUSTOM	**0**	
OPEN-4-CUSTOM	**0**	
Year Built	**1929**	
Year Remodeled	**0**	
Foundation	**6 Piers**	
1.Concrete	4.Wood	7.
2.C Block	5.Slab	8.
3.Br/Stone	6.Piers	9.
Basement	**9 No Basement**	
1.1/4 Bmt	4.Full Bmt	7.
2.1/2 Bmt	5.None	8.
3.3/4 Bmt	6.	9.None
Bsmt Gar # Cars	**0**	
Wet Basement	**9 No Basement**	
1.Dry	4.	7.
2.Damp	5.	8.
3.Wet	6.	9.

SF Bsmt Living	**0**	
Fin Bsmt Grade	**0 0**	
OPEN-5-CUSTOMIZE	**0**	
Heat Type	**100%**	**9 Not Heated**
0.Uncoded	4.Steam	8.Fl/Wall
1.HWBB	5.FWA	9.No Heat
2.HWCI	6.GravWA	10.Radiabt
3.H Pump	7.Electric	12.
Cool Type	**100%**	**9 None**
1.Refrig	4.W&C Air	7.
2.Evapor	5.	8.
3.H Pump	6.	9.None
Kitchen Style	**2 Typical**	
1.Modern	4.Obsolete	7.
2.Typical	5.	8.
3.Old Type	6.	9.None
Bath(s) Style	**2 Typical Bath(s)**	
1.Modern	4.Obsolete	7.
2.Typical	5.	8.
3.Old Type	6.	9.None
# Rooms	**1**	
# Bedrooms	**4**	
# Full Baths	**1**	
# Half Baths	**1**	
# Addn Fixtures	**1**	
# Fireplaces	**1**	

TRIO Software
A Division of Harris Computer Systems

Layout	**1 Typical**	
1.Typical	4.	7.
2.Inadeq	5.	8.
3.Horrid	6.	9.
Attic	**9 None**	
1.1/4 Fin	4.Full Fin	7.
2.1/2 Fin	5.Fl/Stair	8.
3.3/4 Fin	6.	9.None
Insulation	**9 None**	
1.Full	4.Minimal	7.
2.Heavy	5.Partial	8.
3.Capped	6.	9.None
Unfinished %	**0%**	
Grade & Factor	**3 Average 100%**	
1.E Grade	4.B Grade	7.AAA Grad
2.D Grade	5.A Grade	8.SC Grade
3.C Grade	6.AA Grade	9.Same
SQFT (Footprint)	**1037**	
Condition	**4 Average**	
1.Poor	4.Avg	7.V G
2.Fair	5.Avg+	8.Exc
3.Avg-	6.Good	9.Same
Phys. % Good	**0%**	
Funct. % Good	**100%**	
Functional Code	**9 None**	
1.Incomp	4.Delap	7.Seasonal
2.O-Built	5.Bsmt	8.
3.Fire	6.2014 ADJ	9.None
Econ. % Good	**100%**	
Economic Code	**None**	
0.None	3.No Power	7.
1.Location	4.Generate	8.
2.Encroach	9.None	9.
Entrance Code	**0**	
1.Interior	4.Vacant	7.
2.Refusal	5.Estimate	8.
3.Informed	6.	9.
Information Code	**0**	
1.Owner	4.Agent	7.
2.Relative	5.Estimate	8.
3.Tenant	6.Other	9.

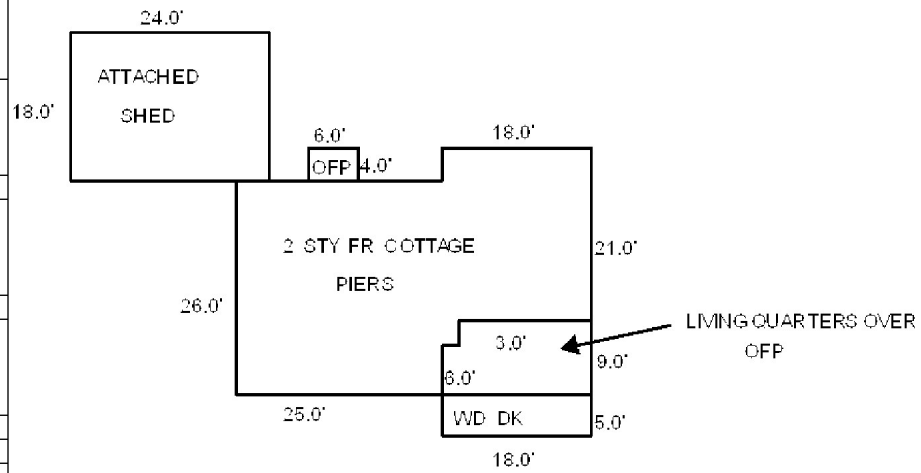

Date Inspected

Additions, Outbuildings & Improvements

Type	Year	Units	Grade	Cond	Phys.	Funct.	Sound Value
68 Wood Deck	1990	90	0 0	0	0 %	0 %	
21 Open Frame	0	153	0 0	0	0 %	0 %	
22 Encl Frame Porch	0	153	0 0	0	0 %	0 %	
21 Open Frame	0	24	0 0	0	0 %	0 %	
24 Frame Shed	0	432	0 0	0	0 %	0 %	
					%	%	
					%	%	
					%	%	
					%	%	
					%	%	

1.One Story Fram
2.Two Story Fram
3.Three Story Fr
4.1 & 1/2 Story
5.1 & 3/4 Story
6.2 & 1/2 Story
21.Open Frame Por
22.Encl Frame Por
23.Frame Garage
24.Frame Shed
25.Frame Bay Wind
26.1SFr Overhang
27.Unfin Basement
28.Unfinished Att
29.Finished Attic

Map Lot 106-002 Account 454 Location 61 FOX ROAD Card 1 Of 2 10/01/2020

FOX, JOHN D (TIC)
SEE COMMENTS FOR OTHER TENANTS IN COMMON
309 NORTH WEST 24TH STREET
GAINSVILLE FL 32607

B1735P378 B5400P192 B6629P219

Property Data

Neighborhood **11 Neighborhood 11**

Tree Growth Year **0**

TREE GROWTH RECERTIFY **0**

STATE SALE CODE **0**

Zone/Land Use **11 Residential**

Secondary Zone

Topography **9** **9**

1.Level 4.Below St 7.
2.Rolling 5.Low 8.
3.Above St 6.Swampy 9.

Utilities **9 None** **9 None**

1.Public 4.Dr Well 7.Cesspool
2.Water 5.Dug Well 8.
3.Sewer 6.Septic 9.None

Street **1 Paved**

1.Paved 4.Proposed 7.
2.Semi Imp 5. 8.
3.Gravel 6. 9.None

REVIEW STRUCTURE YEAR **0**

RENTAL? 0=NO 1=YES **0**

Sale Data

Sale Date

Price

Sale Type

1.Land 4.Mobile 7.
2.L & B 5.Other 8.
3.Building 6. 9.

Financing

1.Convent 4.Seller 7.
2.FHA/VA 5.Private 8.
3.Assumed 6.Cash 9.Unknown

Validity

1.Valid 4.Split 7.Changes
2.Related 5.Partial 8.Other
3.Distress 6.Exempt 9.Fr Ffclse

Verified

1.Buyer 4.Agent 7.Family
2.Seller 5.Pub Rec 8.Other
3.Lender 6.MLS 9.

Assessment Record

Year	Land	Buildings	Exempt	Total
2007	550,300	84,400	0	634,700
2008	550,300	84,400	0	634,700
2009	550,300	84,400	0	634,700
2010	550,300	84,400	0	634,700
2011	550,300	84,400	0	634,700
2012	550,300	84,400	0	634,700
2013	550,300	84,400	0	634,700
2014	550,300	84,400	0	634,700
2015	550,300	84,400	0	634,700
2018	550,300	84,400	0	634,700
2019	550,300	84,400	0	634,700
2020	550,300	84,400	0	634,700

Land Data

Front Foot	Type	Effective Frontage	Effective Depth	Influence Factor	Influence Code
11.Regular Lot				%	
12.Delta Triangle				%	
13.Nabla Triangle				%	
14.Rear Land				%	
15.Miscellaneous				%	
				%	
				%	
Square Foot		**Square Feet**			
16.Regular Lot				%	
17.Secondary Lot				%	
18.Excess Land				%	
19.Condominium				%	
20.Miscellaneous				%	
				%	
				%	
Fract. Acre		**Acreage/Sites**			
21.Homesite (Frac	21	1.00	100	%	0
22.Baselot (Fract	24	3.40	100	%	0
23.Misc (Fract)	40	4.00	100	%	0
Acres	44	1.00	100	%	0
24.Excess Acres 1	45	370.00	100	%	0
25.Excess Acres 5	43	1.00	100	%	0
26.Excess Acres 2				%	
27.Excess Acres 5					
28.Excess Acres 1					
29.Excess acres					

Total Acreage 8.40

Influence Codes

1.Unimproved
2.Excess Frtg
3.Topography
4.Size/Shape
5.Access
6.Restriction
7.Corner Infl
8.Environment
9.Fract Share
Acres
30.Industrial Sit
31.Working Waterf
32.Cultivated Cro
33.Pasture
34.Softwood (Farm
35.Mixed Wood (Fa
36.Hardwood (Farm
37.Softwood
38.Mixed Wood
39.Hardwood
40.Wasteland
41.Gravel Pit
42.Mobile Home Si
43.Location Base
44.Lot Improvemen
45.Waterfront A
46.Lobster Pound

Inspection Witnessed By:

X Date

No./Date	Description	Date Insp.

Notes:
KATHERINE FOX TO:

ALL TIC 3.5% TO EACH OF HER 1/2 INTEREST
4783/009 03-22-2007
5034/309 03-07-2008
5252/212 06-24-2009
5400/192 03-08-2010
5736/212 11-18-2011
[illegible] 2012
5993/320 03-01-2013

Hancock 2020

Hancock 2020

Map Lot 106-002 | Account 454 | Location 61 FOX ROAD | Card 1 Of 2 | 10/01/2020

Building Style	**9 Other**	
0.Uncoded	4.Cape	8.Log
1.Conv.	5.Garrison	9.Other
2.Ranch	6.Colonial	10.Dutch C
3.R Ranch	7.Contemp	11.Farmhou
Dwelling Units	**1**	
Other Units	**0**	
Stories	**2 Two Story**	
1.1	4.1.5	7.3.5
2.2	5.1.75	8.
3.3	6.2.5	9.
Exterior Walls	**1 Wood Siding**	
0.Uncoded	4.Asbestos	8.Stone
1.Wood	5.Stucco	9.Other
2.Vin/Al	6.Brick Ve	10.Concret
3.Compos.	7.Solid Br	12.
Roof Surface	**1 Asphalt Shingles**	
1.Asphalt	4.Composit	7.
2.Slate	5.Wood	8.
3.Metal	6.Other	9.
SF Masonry Trim	**0**	
OPEN-3-CUSTOM	**0**	
OPEN-4-CUSTOM	**0**	
Year Built	**1920**	
Year Remodeled	**0**	
Foundation	**6 Piers**	
1.Concrete	4.Wood	7.
2.C Block	5.Slab	8.
3.Br/Stone	6.Piers	9.
Basement	**9 No Basement**	
1.1/4 Bmt	4.Full Bmt	7.
2.1/2 Bmt	5.None	8.
3.3/4 Bmt	6.	9.None
Bsmt Gar # Cars	**0**	
Wet Basement	**9 No Basement**	
1.Dry	4.	7.
2.Damp	5.	8.
3.Wet	6.	9.

SF Bsmt Living	**0**	
Fin Bsmt Grade	**0 0**	
OPEN-5-CUSTOMIZE	**0**	
Heat Type	**100%**	**5 Forced Warm Air**
0.Uncoded	4.Steam	8.Fl/Wall
1.HWBB	5.FWA	9.No Heat
2.HWCI	6.GravWA	10.Radiabt
3.H Pump	7.Electric	12.
Cool Type	**100%**	**9 None**
1.Refrig	4.W&C Air	7.
2.Evapor	5.	8.
3.H Pump	6.	9.None
Kitchen Style	**2 Typical**	
1.Modern	4.Obsolete	7.
2.Typical	5.	8.
3.Old Type	6.	9.None
Bath(s) Style	**2 Typical Bath(s)**	
1.Modern	4.Obsolete	7.
2.Typical	5.	8.
3.Old Type	6.	9.None
# Rooms	**6**	
# Bedrooms	**2**	
# Full Baths	**1**	
# Half Baths	**1**	
# Addn Fixtures	**0**	
# Fireplaces	**2**	

TRIO Software
A Division of Harris Computer Systems

Layout	**1 Typical**	
1.Typical	4.	7.
2.Inadeq	5.	8.
3.Horrid	6.	9.
Attic	**9 None**	
1.1/4 Fin	4.Full Fin	7.
2.1/2 Fin	5.Fl/Stair	8.
3.3/4 Fin	6.	9.None
Insulation	**9 None**	
1.Full	4.Minimal	7.
2.Heavy	5.Partial	8.
3.Capped	6.	9.None
Unfinished %	**0%**	
Grade & Factor	**3 Average 100%**	
1.E Grade	4.B Grade	7.AAA Grad
2.D Grade	5.A Grade	8.SC Grade
3.C Grade	6.AA Grade	9.Same
SQFT (Footprint)	**864**	
Condition	**4 Average**	
1.Poor	4.Avg	7.V G
2.Fair	5.Avg+	8.Exc
3.Avg-	6.Good	9.Same
Phys. % Good	**0%**	
Funct. % Good	**100%**	
Functional Code	**9 None**	
1.Incomp	4.Delap	7.Seasonal
2.O-Built	5.Bsmt	8.
3.Fire	6.2014 ADJ	9.None
Econ. % Good	**100%**	
Economic Code	**None**	
0.None	3.No Power	7.
1.Location	4.Generate	8.
2.Encroach	9.None	9.
Entrance Code	**0**	
1.Interior	4.Vacant	7.
2.Refusal	5.Estimate	8.
3.Informed	6.	9.
Information Code	**0**	
1.Owner	4.Agent	7.
2.Relative	5.Estimate	8.
3.Tenant	6.Other	9.

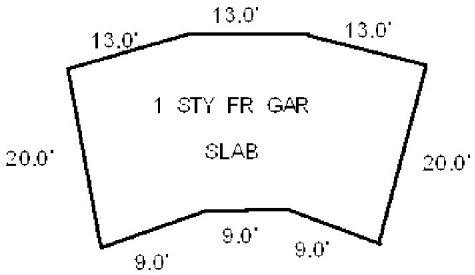

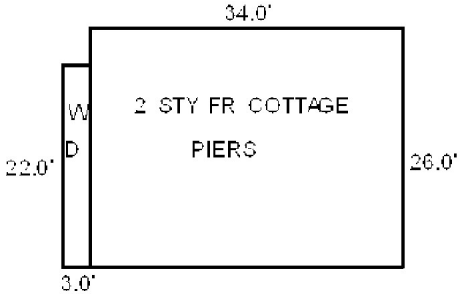

Date Inspected

Additions, Outbuildings & Improvements

Type	Year	Units	Grade	Cond	Phys.	Funct.	Sound Value
68 Wood Deck	1990	66	0 0	0	0 %	0 %	
81 1 SF GARAGE	1980	660	0 0	0	0 %	0 %	
					%	%	
					%	%	
					%	%	
					%	%	
					%	%	
					%	%	
					%	%	
					%	%	

1.One Story Fram
2.Two Story Fram
3.Three Story Fr
4.1 & 1/2 Story
5.1 & 3/4 Story
6.2 & 1/2 Story
21.Open Frame Por
22.Encl Frame Por
23.Frame Garage
24.Frame Shed
25.Frame Bay Wind
26.1SFr Overhang
27.Unfin Basement
28.Unfinished Att
29.Finished Attic

FOX, JOHN D (TIC)
SEE COMMENTS FOR OTHER TENANTS IN COMMON
309 NORTH WEST 24TH STREET
GAINSVILLE FL 32607

B1735P378 B5400P192 B6629P219

Property Data

Neighborhood **11 Neighborhood 11**

Tree Growth Year **0**

TREE GROWTH RECERTIFY **0**

STATE SALE CODE **0**

Zone/Land Use **11 Residential**

Secondary Zone

Topography **9** **9**

1.Level	4.Below St	7.
2.Rolling	5.Low	8.
3.Above St	6.Swampy	9.

Utilities **9 None** **9 None**

1.Public	4.Dr Well	7.Cesspool
2.Water	5.Dug Well	8.
3.Sewer	6.Septic	9.None

Street **1 Paved**

1.Paved	4.Proposed	7.
2.Semi Imp	5.	8.
3.Gravel	6.	9.None

REVIEW STRUCTURE YEAR **0**

RENTAL? 0=NO 1=YES **0**

Sale Data

Sale Date

Price

Sale Type

1.Land	4.Mobile	7.
2.L & B	5.Other	8.
3.Building	6.	9.

Financing

1.Convent	4.Seller	7.
2.FHA/VA	5.Private	8.
3.Assumed	6.Cash	9.Unknown

Validity

1.Valid	4.Split	7.Changes
2.Related	5.Partial	8.Other
3.Distress	6.Exempt	9.Fr Ffclse

Verified

1.Buyer	4.Agent	7.Family
2.Seller	5.Pub Rec	8.Other
3.Lender	6.MLS	9.

Assessment Record

Year	Land	Buildings	Exempt	Total
2007	0	5,800	0	5,800
2008	0	5,800	0	5,800
2009	0	5,800	0	5,800
2010	0	5,800	0	5,800
2011	0	5,800	0	5,800
2012	0	5,800	0	5,800
2013	0	5,800	0	5,800
2014	0	5,800	0	5,800
2015	0	5,800	0	5,800
2018	0	5,800	0	5,800
2019	0	5,800	0	5,800
2020	0	5,800	0	5,800

Land Data

Front Foot	Type	Effective Frontage	Effective Depth	Influence Factor	Influence Code
11.Regular Lot				%	
12.Delta Triangle				%	
13.Nabla Triangle				%	
14.Rear Land				%	
15.Miscellaneous				%	
				%	
				%	
Square Foot		**Square Feet**			
16.Regular Lot				%	
17.Secondary Lot				%	
18.Excess Land				%	
19.Condominium				%	
20.Miscellaneous				%	
				%	
				%	
Fract. Acre		**Acreage/Sites**			
21.Homesite (Frac				%	
22.Baselot (Fract				%	
23.Misc (Fract)				%	
Acres				%	
24.Excess Acres 1				%	
25.Excess Acres 5				%	
26.Excess Acres 2				%	
27.Excess Acres 5				%	
28.Excess Acres 1				%	
29.Excess acres				%	

Total Acreage 0.00

Influence Codes

1.Unimproved
2.Excess Frtg
3.Topography
4.Size/Shape
5.Access
6.Restriction
7.Corner Infl
8.Environment
9.Fract Share
Acres
30.Industrial Sit
31.Working Waterf
32.Cultivated Cro
33.Pasture
34.Softwood (Farm
35.Mixed Wood (Fa
36.Hardwood (Farm
37.Softwood
38.Mixed Wood
39.Hardwood
40.Wasteland
41.Gravel Pit
42.Mobile Home Si
43.Location Base
44.Lot Improvemen
45.Waterfront A
46.Lobster Pound

Inspection Witnessed By:

X Date

No./Date	Description	Date Insp.

Notes:

Hancock 2020

Hancock 2020

Map Lot 106-002 | Account 454 | Location 61 FOX ROAD | Card 2 Of 2 | 10/01/2020

Building Style		
0.Uncoded	4.Cape	8.Log
1.Conv.	5.Garrison	9.Other
2.Ranch	6.Colonial	10.Dutch C
3.R Ranch	7.Contemp	11.Farmhou

Dwelling Units
Other Units

Stories		
1.1	4.1.5	7.3.5
2.2	5.1.75	8.
3.3	6.2.5	9.

Exterior Walls		
0.Uncoded	4.Asbestos	8.Stone
1.Wood	5.Stucco	9.Other
2.Vin/Al	6.Brick Ve	10.Concret
3.Compos.	7.Solid Br	12.

Roof Surface		
1.Asphalt	4.Composit	7.
2.Slate	5.Wood	8.
3.Metal	6.Other	9.

SF Masonry Trim
OPEN-3-CUSTOM
OPEN-4-CUSTOM
Year Built
Year Remodeled

Foundation		
1.Concrete	4.Wood	7.
2.C Block	5.Slab	8.
3.Br/Stone	6.Piers	9.

Basement		
1.1/4 Bmt	4.Full Bmt	7.
2.1/2 Bmt	5.None	8.
3.3/4 Bmt	6.	9.None

Bsmt Gar # Cars

Wet Basement		
1.Dry	4.	7.
2.Damp	5.	8.
3.Wet	6.	9.

SF Bsmt Living
Fin Bsmt Grade
OPEN-5-CUSTOMIZE

Heat Type **100%**		
0.Uncoded	4.Steam	8.Fl/Wall
1.HWBB	5.FWA	9.No Heat
2.HWCI	6.GravWA	10.Radiabt
3.H Pump	7.Electric	12.

Cool Type **100%**		
1.Refrig	4.W&C Air	7.
2.Evapor	5.	8.
3.H Pump	6.	9.None

Kitchen Style		
1.Modern	4.Obsolete	7.
2.Typical	5.	8.
3.Old Type	6.	9.None

Bath(s) Style		
1.Modern	4.Obsolete	7.
2.Typical	5.	8.
3.Old Type	6.	9.None

Rooms
Bedrooms
Full Baths
Half Baths
Addn Fixtures
Fireplaces

TRIO Software
A Division of Harris Computer Systems

Layout		
1.Typical	4.	7.
2.Inadeq	5.	8.
3.Horrid	6.	9.

Attic		
1.1/4 Fin	4.Full Fin	7.
2.1/2 Fin	5.Fl/Stair	8.
3.3/4 Fin	6.	9.None

Insulation		
1.Full	4.Minimal	7.
2.Heavy	5.Partial	8.
3.Capped	6.	9.None

Unfinished %
Grade & Factor

1.E Grade	4.B Grade	7.AAA Grad
2.D Grade	5.A Grade	8.SC Grade
3.C Grade	6.AA Grade	9.Same

SQFT (Footprint)

Condition		
1.Poor	4.Avg	7.V G
2.Fair	5.Avg+	8.Exc
3.Avg-	6.Good	9.Same

Phys. % Good
Funct. % Good

Functional Code		
1.Incomp	4.Delap	7.Seasonal
2.O-Built	5.Bsmt	8.
3.Fire	6.2014 ADJ	9.None

Econ. % Good

Economic Code		
0.None	3.No Power	7.
1.Location	4.Generate	8.
2.Encroach	9.None	9.

Entrance Code **0**		
1.Interior	4.Vacant	7.
2.Refusal	5.Estimate	8.
3.Informed	6.	9.

Information Code **0**		
1.Owner	4.Agent	7.
2.Relative	5.Estimate	8.
3.Tenant	6.Other	9.

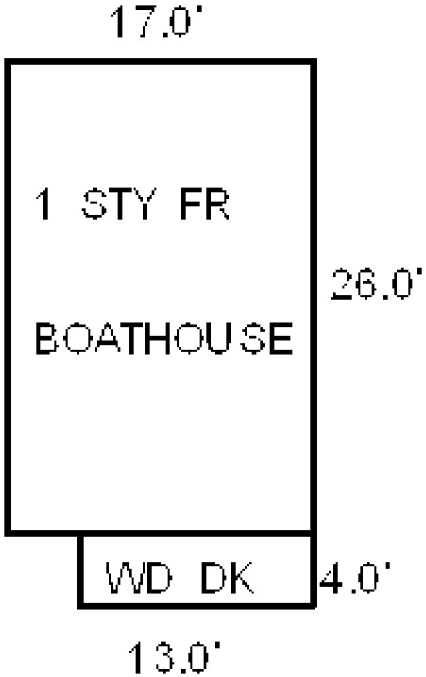

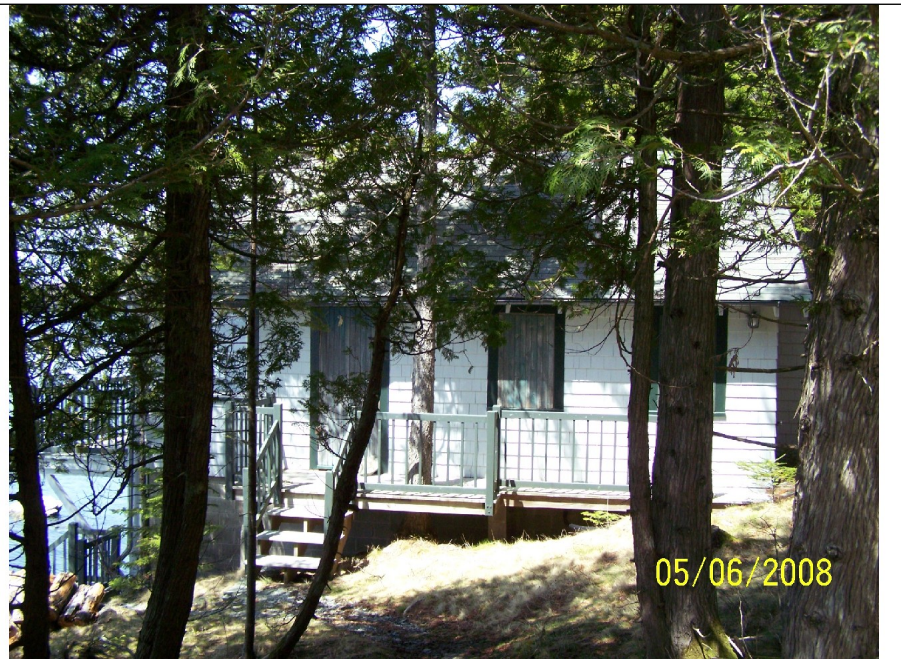

Date Inspected

Additions, Outbuildings & Improvements

Type	Year	Units	Grade	Cond	Phys.	Funct.	Sound Value
91 BUNKHOUSE (FR)	1980	442	3 100	3	0 %	100 %	
68 Wood Deck	1990	52	2 100	3	0 %	100 %	
					%	%	
					%	%	
					%	%	
					%	%	
					%	%	
					%	%	
					%	%	
					%	%	

1.One Story Fram
2.Two Story Fram
3.Three Story Fr
4.1 & 1/2 Story
5.1 & 3/4 Story
6.2 & 1/2 Story
21.Open Frame Por
22.Encl Frame Por
23.Frame Garage
24.Frame Shed
25.Frame Bay Wind
26.1SFr Overhang
27.Unfin Basement
28.Unfinished Att
29.Finished Attic

Map Lot 106-003 Account 749 Location POINT ROAD Card 1 Of 1 10/01/2020

LOUNDER, GERTRUDE, EDITH & PAM
782 POINT ROAD
HANCOCK ME 04640

B1371P330

Inspection Witnessed By:

X Date

No./Date	Description	Date Insp.

Notes:

Hancock 2020

Property Data

Neighborhood **10 Neighborhood 10**

Tree Growth Year **0**

TREE GROWTH RECERTIFY **0**

STATE SALE CODE **0**

Zone/Land Use **11 Residential**

Secondary Zone

Topography **9** **9**

1.Level 4.Below St 7.
2.Rolling 5.Low 8.
3.Above St 6.Swampy 9.

Utilities **9 None** **9 None**

1.Public 4.Dr Well 7.Cesspool
2.Water 5.Dug Well 8.
3.Sewer 6.Septic 9.None

Street **9 None**

1.Paved 4.Proposed 7.
2.Semi Imp 5. 8.
3.Gravel 6. 9.None

REVIEW STRUCTURE YEAR **0**

RENTAL? 0=NO 1=YES **0**

Sale Data

Sale Date

Price

Sale Type

1.Land 4.Mobile 7.
2.L & B 5.Other 8.
3.Building 6. 9.

Financing

1.Convent 4.Seller 7.
2.FHA/VA 5.Private 8.
3.Assumed 6.Cash 9.Unknown

Validity

1.Valid 4.Split 7.Changes
2.Related 5.Partial 8.Other
3.Distress 6.Exempt 9.Fr Ffclse

Verified

1.Buyer 4.Agent 7.Family
2.Seller 5.Pub Rec 8.Other
3.Lender 6.MLS 9.

Assessment Record

Year	Land	Buildings	Exempt	Total
2007	81,600	0	0	81,600
2008	83,000	0	0	83,000
2009	83,000	0	0	83,000
2010	83,000	0	0	83,000
2011	83,000	0	0	83,000
2012	83,000	0	0	83,000
2013	83,000	0	0	83,000
2014	83,000	0	0	83,000
2015	83,000	0	0	83,000
2016	83,000	0	0	83,000
2017	83,000	0	0	83,000
2018	83,000	0	0	83,000
2019	83,000	0	0	83,000
2020	83,000	0	0	83,000

Land Data

Front Foot	Type	Effective Frontage	Effective Depth	Influence Factor	Influence Code
11.Regular Lot				%	
12.Delta Triangle				%	
13.Nabla Triangle				%	
14.Rear Land				%	
15.Miscellaneous				%	
				%	
				%	
Square Foot		**Square Feet**			
16.Regular Lot				%	
17.Secondary Lot				%	
18.Excess Land				%	
19.Condominium				%	
20.Miscellaneous				%	
				%	
				%	
Fract. Acre		**Acreage/Sites**			
21.Homesite (Frac	21	1.00		100 %	0
22.Baselot (Fract	24	4.00		100 %	0
23.Misc (Fract)	44	1.00		100 %	0
Acres	25	0.40		100 %	0
24.Excess Acres 1				%	
25.Excess Acres 5				%	
26.Excess Acres 2				%	
27.Excess Acres 5					
28.Excess Acres 1					
29.Excess acres					

Total Acreage 5.40

Influence Codes

1.Unimproved
2.Excess Frtg
3.Topography
4.Size/Shape
5.Access
6.Restriction
7.Corner Infl
8.Environment
9.Fract Share
Acres
30.Industrial Sit
31.Working Waterf
32.Cultivated Cro
33.Pasture
34.Softwood (Farm
35.Mixed Wood (Fa
36.Hardwood (Farm
37.Softwood
38.Mixed Wood
39.Hardwood
40.Wasteland
41.Gravel Pit
42.Mobile Home Si
43.Location Base
44.Lot Improvemen
45.Waterfront A
46.Lobster Pound

Hancock 2020

Map Lot 106-003 | Account 749 | Location POINT ROAD | Card 1 Of 1 | 10/01/2020

Building Style		
0.Uncoded	4.Cape	8.Log
1.Conv.	5.Garrison	9.Other
2.Ranch	6.Colonial	10.Dutch C
3.R Ranch	7.Contemp	11.Farmhou

Dwelling Units
Other Units

Stories		
1.1	4.1.5	7.3.5
2.2	5.1.75	8.
3.3	6.2.5	9.

Exterior Walls		
0.Uncoded	4.Asbestos	8.Stone
1.Wood	5.Stucco	9.Other
2.Vin/Al	6.Brick Ve	10.Concret
3.Compos.	7.Solid Br	12.

Roof Surface		
1.Asphalt	4.Composit	7.
2.Slate	5.Wood	8.
3.Metal	6.Other	9.

SF Masonry Trim
OPEN-3-CUSTOM
OPEN-4-CUSTOM
Year Built
Year Remodeled

Foundation		
1.Concrete	4.Wood	7.
2.C Block	5.Slab	8.
3.Br/Stone	6.Piers	9.

Basement		
1.1/4 Bmt	4.Full Bmt	7.
2.1/2 Bmt	5.None	8.
3.3/4 Bmt	6.	9.None

Bsmt Gar # Cars

Wet Basement		
1.Dry	4.	7.
2.Damp	5.	8.
3.Wet	6.	9.

SF Bsmt Living
Fin Bsmt Grade
OPEN-5-CUSTOMIZE

Heat Type **100%**		
0.Uncoded	4.Steam	8.Fl/Wall
1.HWBB	5.FWA	9.No Heat
2.HWCI	6.GravWA	10.Radiabt
3.H Pump	7.Electric	12.

Cool Type **100%**		
1.Refrig	4.W&C Air	7.
2.Evapor	5.	8.
3.H Pump	6.	9.None

Kitchen Style		
1.Modern	4.Obsolete	7.
2.Typical	5.	8.
3.Old Type	6.	9.None

Bath(s) Style		
1.Modern	4.Obsolete	7.
2.Typical	5.	8.
3.Old Type	6.	9.None

Rooms
Bedrooms
Full Baths
Half Baths
Addn Fixtures
Fireplaces

TRIO Software
A Division of Harris Computer Systems

Layout		
1.Typical	4.	7.
2.Inadeq	5.	8.
3.Horrid	6.	9.

Attic		
1.1/4 Fin	4.Full Fin	7.
2.1/2 Fin	5.Fl/Stair	8.
3.3/4 Fin	6.	9.None

Insulation		
1.Full	4.Minimal	7.
2.Heavy	5.Partial	8.
3.Capped	6.	9.None

Unfinished %

Grade & Factor		
1.E Grade	4.B Grade	7.AAA Grad
2.D Grade	5.A Grade	8.SC Grade
3.C Grade	6.AA Grade	9.Same

SQFT (Footprint)

Condition		
1.Poor	4.Avg	7.V G
2.Fair	5.Avg+	8.Exc
3.Avg-	6.Good	9.Same

Phys. % Good
Funct. % Good

Functional Code		
1.Incomp	4.Delap	7.Seasonal
2.O-Built	5.Bsmt	8.
3.Fire	6.2014 ADJ	9.None

Econ. % Good

Economic Code		
0.None	3.No Power	7.
1.Location	4.Generate	8.
2.Encroach	9.None	9.

Entrance Code **0**		
1.Interior	4.Vacant	7.
2.Refusal	5.Estimate	8.
3.Informed	6.	9.

Information Code **0**		
1.Owner	4.Agent	7.
2.Relative	5.Estimate	8.
3.Tenant	6.Other	9.

Date Inspected

Additions, Outbuildings & Improvements

Type	Year	Units	Grade	Cond	Phys.	Funct.	Sound Value
					%	%	
					%	%	
					%	%	
					%	%	
					%	%	
					%	%	
					%	%	
					%	%	
					%	%	
					%	%	

1.One Story Fram
2.Two Story Fram
3.Three Story Fr
4.1 & 1/2 Story
5.1 & 3/4 Story
6.2 & 1/2 Story
21.Open Frame Por
22.Encl Frame Por
23.Frame Garage
24.Frame Shed
25.Frame Bay Wind
26.1SFr Overhang
27.Unfin Basement
28.Unfinished Att
29.Finished Attic

Map Lot 106-004 Account 1150 Location POINT ROAD Card 1 Of 1 10/01/2020

LOUNDER-HASKINS, GERTRUDE
P O BOX 97
HANCOCK ME 04640

B1909P70

Inspection Witnessed By:

X Date

No./Date	Description	Date Insp.

Notes:

Hancock 2020

Property Data

Neighborhood **10 Neighborhood 10**

Tree Growth Year **0**

TREE GROWTH RECERTIFY **0**

STATE SALE CODE **0**

Zone/Land Use **11 Residential**

Secondary Zone

Topography

1.Level 4.Below St 7.
2.Rolling 5.Low 8.
3.Above St 6.Swampy 9.

Utilities

1.Public 4.Dr Well 7.Cesspool
2.Water 5.Dug Well 8.
3.Sewer 6.Septic 9.None

Street

1.Paved 4.Proposed 7.
2.Semi Imp 5. 8.
3.Gravel 6. 9.None

REVIEW STRUCTURE YEAR **0**

RENTAL? 0=NO 1=YES **0**

Sale Data

Sale Date

Price

Sale Type

1.Land 4.Mobile 7.
2.L & B 5.Other 8.
3.Building 6. 9.

Financing

1.Convent 4.Seller 7.
2.FHA/VA 5.Private 8.
3.Assumed 6.Cash 9.Unknown

Validity

1.Valid 4.Split 7.Changes
2.Related 5.Partial 8.Other
3.Distress 6.Exempt 9.Fr Ffclse

Verified

1.Buyer 4.Agent 7.Family
2.Seller 5.Pub Rec 8.Other
3.Lender 6.MLS 9.

Assessment Record

Year	Land	Buildings	Exempt	Total
2007	88,600	0	0	88,600
2008	106,100	0	0	106,100
2009	106,100	0	0	106,100
2010	106,100	0	0	106,100
2011	106,100	0	0	106,100
2012	106,100	0	0	106,100
2013	106,100	0	0	106,100
2014	106,100	0	0	106,100
2015	106,100	0	0	106,100
2016	106,100	0	0	106,100
2017	106,100	0	0	106,100
2018	106,100	0	0	106,100
2019	106,100	0	0	106,100
2020	106,100	0	0	106,100

Land Data

Front Foot

11.Regular Lot
12.Delta Triangle
13.Nabla Triangle
14.Rear Land
15.Miscellaneous

Square Foot

16.Regular Lot
17.Secondary Lot
18.Excess Land
19.Condominium
20.Miscellaneous

Fract. Acre

21.Homesite (Frac
22.Baselot (Fract
23.Misc (Fract)
Acres
24.Excess Acres 1
25.Excess Acres 5
26.Excess Acres 2
27.Excess Acres 5
28.Excess Acres 1
29.Excess acres

Type	Effective Frontage	Effective Depth	Influence Factor	Influence Code
			%	
			%	
			%	
			%	
			%	
			%	
			%	
	Square Feet			
			%	
			%	
			%	
			%	
			%	
			%	
			%	
	Acreage/Sites			
21	1.00		100 %	0
24	4.00		100 %	0
40	2.00		100 %	0
44	1.00		100 %	0
25	5.00		100 %	0
			%	
			%	

Total Acreage 12.00

Influence Codes

1.Unimproved
2.Excess Frtg
3.Topography
4.Size/Shape
5.Access
6.Restriction
7.Corner Infl
8.Environment
9.Fract Share
Acres
30.Industrial Sit
31.Working Waterf
32.Cultivated Cro
33.Pasture
34.Softwood (Farm
35.Mixed Wood (Fa
36.Hardwood (Farm
37.Softwood
38.Mixed Wood
39.Hardwood
40.Wasteland
41.Gravel Pit
42.Mobile Home Si
43.Location Base
44.Lot Improvemen
45.Waterfront A
46.Lobster Pound

Hancock 2020

Map Lot 106-004 | Account 1150 | Location POINT ROAD | Card 1 Of 1 | 10/01/2020

Building Style		
0.Uncoded	4.Cape	8.Log
1.Conv.	5.Garrison	9.Other
2.Ranch	6.Colonial	10.Dutch C
3.R Ranch	7.Contemp	11.Farmhou

Dwelling Units
Other Units

Stories		
1.1	4.1.5	7.3.5
2.2	5.1.75	8.
3.3	6.2.5	9.

Exterior Walls		
0.Uncoded	4.Asbestos	8.Stone
1.Wood	5.Stucco	9.Other
2.Vin/Al	6.Brick Ve	10.Concret
3.Compos.	7.Solid Br	12.

Roof Surface		
1.Asphalt	4.Composit	7.
2.Slate	5.Wood	8.
3.Metal	6.Other	9.

SF Masonry Trim
OPEN-3-CUSTOM
OPEN-4-CUSTOM
Year Built
Year Remodeled

Foundation		
1.Concrete	4.Wood	7.
2.C Block	5.Slab	8.
3.Br/Stone	6.Piers	9.

Basement		
1.1/4 Bmt	4.Full Bmt	7.
2.1/2 Bmt	5.None	8.
3.3/4 Bmt	6.	9.None

Bsmt Gar # Cars

Wet Basement		
1.Dry	4.	7.
2.Damp	5.	8.
3.Wet	6.	9.

SF Bsmt Living
Fin Bsmt Grade
OPEN-5-CUSTOMIZE

Heat Type **100%**		
0.Uncoded	4.Steam	8.Fl/Wall
1.HWBB	5.FWA	9.No Heat
2.HWCI	6.GravWA	10.Radiabt
3.H Pump	7.Electric	12.

Cool Type **100%**		
1.Refrig	4.W&C Air	7.
2.Evapor	5.	8.
3.H Pump	6.	9.None

Kitchen Style		
1.Modern	4.Obsolete	7.
2.Typical	5.	8.
3.Old Type	6.	9.None

Bath(s) Style		
1.Modern	4.Obsolete	7.
2.Typical	5.	8.
3.Old Type	6.	9.None

Rooms
Bedrooms
Full Baths
Half Baths
Addn Fixtures
Fireplaces

TRIO Software
A Division of Harris Computer Systems

Layout		
1.Typical	4.	7.
2.Inadeq	5.	8.
3.Horrid	6.	9.

Attic		
1.1/4 Fin	4.Full Fin	7.
2.1/2 Fin	5.Fl/Stair	8.
3.3/4 Fin	6.	9.None

Insulation		
1.Full	4.Minimal	7.
2.Heavy	5.Partial	8.
3.Capped	6.	9.None

Unfinished %

Grade & Factor		
1.E Grade	4.B Grade	7.AAA Grad
2.D Grade	5.A Grade	8.SC Grade
3.C Grade	6.AA Grade	9.Same

SQFT (Footprint)

Condition		
1.Poor	4.Avg	7.V G
2.Fair	5.Avg+	8.Exc
3.Avg-	6.Good	9.Same

Phys. % Good
Funct. % Good

Functional Code		
1.Incomp	4.Delap	7.Seasonal
2.O-Built	5.Bsmt	8.
3.Fire	6.2014 ADJ	9.None

Econ. % Good

Economic Code		
0.None	3.No Power	7.
1.Location	4.Generate	8.
2.Encroach	9.None	9.

Entrance Code **0**		
1.Interior	4.Vacant	7.
2.Refusal	5.Estimate	8.
3.Informed	6.	9.

Information Code **0**		
1.Owner	4.Agent	7.
2.Relative	5.Estimate	8.
3.Tenant	6.Other	9.

Date Inspected

Additions, Outbuildings & Improvements

Type	Year	Units	Grade	Cond	Phys.	Funct.	Sound Value
					%	%	
					%	%	
					%	%	
					%	%	
					%	%	
					%	%	
					%	%	
					%	%	
					%	%	
					%	%	

1.One Story Fram
2.Two Story Fram
3.Three Story Fr
4.1 & 1/2 Story
5.1 & 3/4 Story
6.2 & 1/2 Story
21.Open Frame Por
22.Encl Frame Por
23.Frame Garage
24.Frame Shed
25.Frame Bay Wind
26.1SFr Overhang
27.Unfin Basement
28.Unfinished Att
29.Finished Attic

Map Lot 106-005 Account 1148 Location 59 LEDGE LANE Card 1 Of 1 10/01/2020

LOUNDER-HASKINS, GERTRUDE
P O BOX 97
HANCOCK ME 04640

B1906P64

Property Data

Neighborhood **11 Neighborhood 11**

Tree Growth Year **0**

TREE GROWTH RECERTIFY **0**

STATE SALE CODE **0**

Zone/Land Use **11 Residential**

Secondary Zone

Topography

1.Level	4.Below St	7.
2.Rolling	5.Low	8.
3.Above St	6.Swampy	9.

Utilities

1.Public	4.Dr Well	7.Cesspool
2.Water	5.Dug Well	8.
3.Sewer	6.Septic	9.None

Street **1 Paved**

1.Paved	4.Proposed	7.
2.Semi Imp	5.	8.
3.Gravel	6.	9.None

REVIEW STRUCTURE YEAR **0**

RENTAL? 0=NO 1=YES **0**

Sale Data

Sale Date

Price

Sale Type

1.Land	4.Mobile	7.
2.L & B	5.Other	8.
3.Building	6.	9.

Financing

1.Convent	4.Seller	7.
2.FHA/VA	5.Private	8.
3.Assumed	6.Cash	9.Unknown

Validity

1.Valid	4.Split	7.Changes
2.Related	5.Partial	8.Other
3.Distress	6.Exempt	9.Fr Ffclse

Verified

1.Buyer	4.Agent	7.Family
2.Seller	5.Pub Rec	8.Other
3.Lender	6.MLS	9.

Assessment Record

Year	Land	Buildings	Exempt	Total
2007	549,700	79,800	13,000	616,500
2008	549,700	79,800	13,000	616,500
2009	549,700	79,800	13,000	616,500
2010	549,700	79,800	10,000	619,500
2011	548,000	79,800	10,000	617,800
2012	548,000	79,800	10,000	617,800
2013	548,000	79,800	10,000	617,800
2014	548,000	79,800	10,800	617,000
2015	548,000	79,800	11,000	616,800
2016	548,000	79,800	16,500	611,300
2017	548,000	78,800	22,000	604,800
2018	548,000	78,800	22,000	604,800
2019	548,000	78,800	22,000	604,800
2020	548,000	78,800	25,000	601,800

Land Data

Front Foot	Type	Effective Frontage	Effective Depth	Influence Factor	Influence Code
11.Regular Lot				%	
12.Delta Triangle				%	
13.Nabla Triangle				%	
14.Rear Land				%	
15.Miscellaneous				%	
				%	
				%	
Square Foot		**Square Feet**			
16.Regular Lot				%	
17.Secondary Lot				%	
18.Excess Land				%	
19.Condominium				%	
20.Miscellaneous				%	
				%	
				%	
Fract. Acre		**Acreage/Sites**			
21.Homesite (Frac	21	1.00		100 %	0
22.Baselot (Fract	24	2.00		100 %	0
23.Misc (Fract)	44	1.00		100 %	0
Acres	45	370.00		100 %	0
24.Excess Acres 1	43	1.00		100 %	0
25.Excess Acres 5				%	
26.Excess Acres 2				%	
27.Excess Acres 5					
28.Excess Acres 1					
29.Excess acres					

Total Acreage 3.00

Influence Codes

1.Unimproved
2.Excess Frtg
3.Topography
4.Size/Shape
5.Access
6.Restriction
7.Corner Infl
8.Environment
9.Fract Share
Acres
30.Industrial Sit
31.Working Waterf
32.Cultivated Cro
33.Pasture
34.Softwood (Farm
35.Mixed Wood (Fa
36.Hardwood (Farm
37.Softwood
38.Mixed Wood
39.Hardwood
40.Wasteland
41.Gravel Pit
42.Mobile Home Si
43.Location Base
44.Lot Improvemen
45.Waterfront A
46.Lobster Pound

Inspection Witnessed By:

X Date

No./Date	Description	Date Insp.

Notes:

Hancock 2020

Hancock 2020

Map Lot 106-005 | Account 1148 | Location 59 LEDGE LANE | Card 1 Of 1 | 10/01/2020

Building Style	**2 Ranch**	
0.Uncoded	4.Cape	8.Log
1.Conv.	5.Garrison	9.Other
2.Ranch	6.Colonial	10.Dutch C
3.R Ranch	7.Contemp	11.Farmhou
Dwelling Units	**1**	
Other Units	**0**	
Stories	**1 One Story**	
1.1	4.1.5	7.3.5
2.2	5.1.75	8.
3.3	6.2.5	9.
Exterior Walls	**1 Wood Siding**	
0.Uncoded	4.Asbestos	8.Stone
1.Wood	5.Stucco	9.Other
2.Vin/Al	6.Brick Ve	10.Concret
3.Compos.	7.Solid Br	12.
Roof Surface	**1 Asphalt Shingles**	
1.Asphalt	4.Composit	7.
2.Slate	5.Wood	8.
3.Metal	6.Other	9.
SF Masonry Trim	**0**	
OPEN-3-CUSTOM	**0**	
OPEN-4-CUSTOM	**0**	
Year Built	**1963**	
Year Remodeled	**0**	
Foundation	**5 Concrete Slab**	
1.Concrete	4.Wood	7.
2.C Block	5.Slab	8.
3.Br/Stone	6.Piers	9.
Basement	**9 No Basement**	
1.1/4 Bmt	4.Full Bmt	7.
2.1/2 Bmt	5.None	8.
3.3/4 Bmt	6.	9.None
Bsmt Gar # Cars	**0**	
Wet Basement	**9 No Basement**	
1.Dry	4.	7.
2.Damp	5.	8.
3.Wet	6.	9.

SF Bsmt Living	**0**	
Fin Bsmt Grade	**0 0**	
OPEN-5-CUSTOMIZE	**0**	
Heat Type	**100%**	**5 Forced Warm Air**
0.Uncoded	4.Steam	8.Fl/Wall
1.HWBB	5.FWA	9.No Heat
2.HWCI	6.GravWA	10.Radiabt
3.H Pump	7.Electric	12.
Cool Type	**100%**	**9 None**
1.Refrig	4.W&C Air	7.
2.Evapor	5.	8.
3.H Pump	6.	9.None
Kitchen Style	**2 Typical**	
1.Modern	4.Obsolete	7.
2.Typical	5.	8.
3.Old Type	6.	9.None
Bath(s) Style	**2 Typical Bath(s)**	
1.Modern	4.Obsolete	7.
2.Typical	5.	8.
3.Old Type	6.	9.None
# Rooms	**5**	
# Bedrooms	**2**	
# Full Baths	**2**	
# Half Baths	**0**	
# Addn Fixtures	**0**	
# Fireplaces	**1**	

TRIO Software
A Division of Harris Computer Systems

Layout	**1 Typical**	
1.Typical	4.	7.
2.Inadeq	5.	8.
3.Horrid	6.	9.
Attic	**1 1/4 Finished**	
1.1/4 Fin	4.Full Fin	7.
2.1/2 Fin	5.Fl/Stair	8.
3.3/4 Fin	6.	9.None
Insulation	**1 Full**	
1.Full	4.Minimal	7.
2.Heavy	5.Partial	8.
3.Capped	6.	9.None
Unfinished %	**0%**	
Grade & Factor	**3 Average 100%**	
1.E Grade	4.B Grade	7.AAA Grad
2.D Grade	5.A Grade	8.SC Grade
3.C Grade	6.AA Grade	9.Same
SQFT (Footprint)	**529**	
Condition	**5 Above Average**	
1.Poor	4.Avg	7.V G
2.Fair	5.Avg+	8.Exc
3.Avg-	6.Good	9.Same
Phys. % Good	**0%**	
Funct. % Good	**100%**	
Functional Code	**9 None**	
1.Incomp	4.Delap	7.Seasonal
2.O-Built	5.Bsmt	8.
3.Fire	6.2014 ADJ	9.None
Econ. % Good	**100%**	
Economic Code	**None**	
0.None	3.No Power	7.
1.Location	4.Generate	8.
2.Encroach	9.None	9.
Entrance Code	**0**	
1.Interior	4.Vacant	7.
2.Refusal	5.Estimate	8.
3.Informed	6.	9.
Information Code	**0**	
1.Owner	4.Agent	7.
2.Relative	5.Estimate	8.
3.Tenant	6.Other	9.

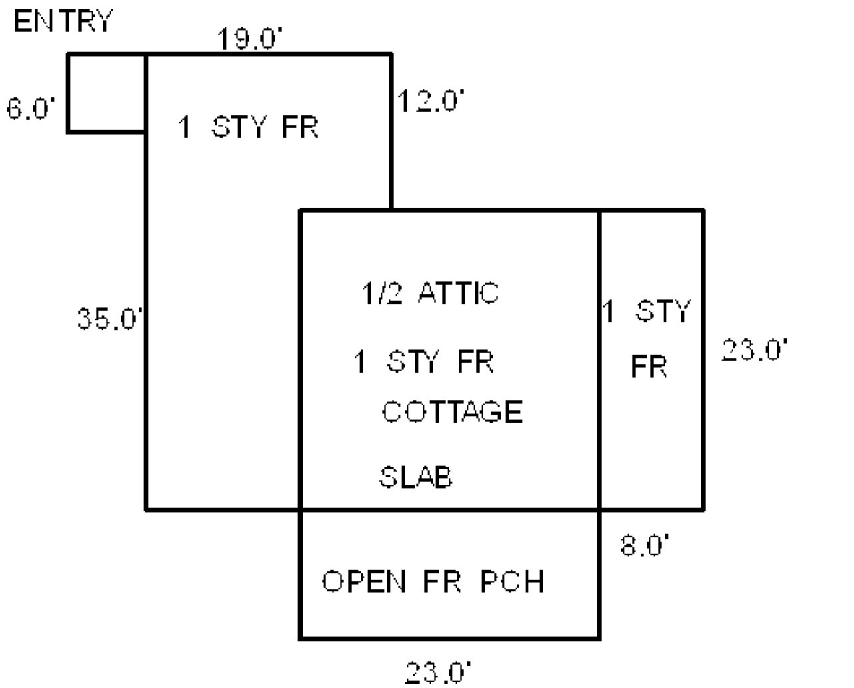

Date Inspected

Additions, Outbuildings & Improvements

Type	Year	Units	Grade	Cond	Phys.	Funct.	Sound Value
22 Encl Frame Porch	1963	42	2 100	4	0 %	100 %	
1 One Story Frame	0	504	0 0	0	0 %	0 %	
21 Open Frame	0	230	0 0	0	0 %	0 %	
68 Wood Deck	1990	184	2 100	4	0 %	100 %	
					%	%	
					%	%	
					%	%	
					%	%	
					%	%	
					%	%	

1.One Story Fram
2.Two Story Fram
3.Three Story Fr
4.1 & 1/2 Story
5.1 & 3/4 Story
6.2 & 1/2 Story
21.Open Frame Por
22.Encl Frame Por
23.Frame Garage
24.Frame Shed
25.Frame Bay Wind
26.1SFr Overhang
27.Unfin Basement
28.Unfinished Att
29.Finished Attic

Map Lot 106-005-001 Account 2134 Location 57 LEDGE LANE Card 1 Of 1 10/01/2020

SPRAGUE, RYAN (J/T)
BEATTIE, ELLEN
757 POINT ROAD
HANCOCK ME 04640

B5424P145 B5644P17

Inspection Witnessed By:

X Date

No./Date	Description	Date Insp.

Notes:

Hancock 2020

Property Data

Neighborhood **11 Neighborhood 11**

Tree Growth Year **0**

TREE GROWTH RECERTIFY **0**

STATE SALE CODE **0**

Zone/Land Use **11 Residential**

Secondary Zone

Topography **2 Rolling**

1.Level	4.Below St	7.
2.Rolling	5.Low	8.
3.Above St	6.Swampy	9.

Utilities

1.Public	4.Dr Well	7.Cesspool
2.Water	5.Dug Well	8.
3.Sewer	6.Septic	9.None

Street **3 Gravel**

1.Paved	4.Proposed	7.
2.Semi Imp	5.	8.
3.Gravel	6.	9.None

REVIEW STRUCTURE YEAR **0**

RENTAL? 0=NO 1=YES **0**

Sale Data

Sale Date

Price

Sale Type

1.Land	4.Mobile	7.
2.L & B	5.Other	8.
3.Building	6.	9.

Financing

1.Convent	4.Seller	7.
2.FHA/VA	5.Private	8.
3.Assumed	6.Cash	9.Unknown

Validity

1.Valid	4.Split	7.Changes
2.Related	5.Partial	8.Other
3.Distress	6.Exempt	9.Fr Ffclse

Verified

1.Buyer	4.Agent	7.Family
2.Seller	5.Pub Rec	8.Other
3.Lender	6.MLS	9.

Assessment Record

Year	Land	Buildings	Exempt	Total
2011	150,200	0	0	150,200
2012	100,200	165,200	0	265,400
2013	100,200	165,200	0	265,400
2014	100,200	165,200	0	265,400
2015	100,200	165,200	0	265,400
2016	100,200	165,200	0	265,400
2017	100,200	165,200	0	265,400
2018	100,200	165,200	22,000	243,400
2019	100,200	165,200	22,000	243,400
2020	100,200	165,200	25,000	240,400

Land Data

Front Foot	Type	Effective Frontage	Effective Depth	Influence Factor	Influence Code
11.Regular Lot				%	
12.Delta Triangle				%	
13.Nabla Triangle				%	
14.Rear Land				%	
15.Miscellaneous				%	
				%	
				%	
Square Foot		**Square Feet**			
16.Regular Lot				%	
17.Secondary Lot				%	
18.Excess Land				%	
19.Condominium				%	
20.Miscellaneous				%	
				%	
				%	
Fract. Acre		**Acreage/Sites**			
21.Homesite (Frac	21	1.00	100	%	0
22.Baselot (Fract	24	0.13	100	%	0
23.Misc (Fract)	43	1.00	50	%	0
Acres				%	
24.Excess Acres 1				%	
25.Excess Acres 5				%	
26.Excess Acres 2				%	
27.Excess Acres 5				%	
28.Excess Acres 1				%	
29.Excess acres				%	

Total Acreage 1.13

Influence Codes

1.Unimproved
2.Excess Frtg
3.Topography
4.Size/Shape
5.Access
6.Restriction
7.Corner Infl
8.Environment
9.Fract Share
Acres
30.Industrial Sit
31.Working Waterf
32.Cultivated Cro
33.Pasture
34.Softwood (Farm
35.Mixed Wood (Fa
36.Hardwood (Farm
37.Softwood
38.Mixed Wood
39.Hardwood
40.Wasteland
41.Gravel Pit
42.Mobile Home Si
43.Location Base
44.Lot Improvemen
45.Waterfront A
46.Lobster Pound

Hancock 2020

Map Lot 106-005-001 | Account 2134 | Location 57 LEDGE LANE | Card 1 Of 1 | 10/01/2020

Building Style	**1 Conventional**	
0.Uncoded	4.Cape	8.Log
1.Conv.	5.Garrison	9.Other
2.Ranch	6.Colonial	10.Dutch C
3.R Ranch	7.Contemp	11.Farmhou
Dwelling Units	**1**	
Other Units	**0**	
Stories	**1 One Story**	
1.1	4.1.5	7.3.5
2.2	5.1.75	8.
3.3	6.2.5	9.
Exterior Walls	**2 Vinyl/Aluminum**	
0.Uncoded	4.Asbestos	8.Stone
1.Wood	5.Stucco	9.Other
2.Vin/Al	6.Brick Ve	10.Concret
3.Compos.	7.Solid Br	12.
Roof Surface	**1 Asphalt Shingles**	
1.Asphalt	4.Composit	7.
2.Slate	5.Wood	8.
3.Metal	6.Other	9.
SF Masonry Trim	**0**	
OPEN-3-CUSTOM	**0**	
OPEN-4-CUSTOM	**0**	
Year Built	**2012**	
Year Remodeled	**0**	
Foundation	**1 Concrete**	
1.Concrete	4.Wood	7.
2.C Block	5.Slab	8.
3.Br/Stone	6.Piers	9.
Basement	**4 Full Basement**	
1.1/4 Bmt	4.Full Bmt	7.
2.1/2 Bmt	5.None	8.
3.3/4 Bmt	6.	9.None
Bsmt Gar # Cars	**0**	
Wet Basement	**1 Dry Basement**	
1.Dry	4.	7.
2.Damp	5.	8.
3.Wet	6.	9.

SF Bsmt Living	**0**	
Fin Bsmt Grade	**0 0**	
OPEN-5-CUSTOMIZE	**0**	
Heat Type	**100%**	**1 Hot Water BB**
0.Uncoded	4.Steam	8.Fl/Wall
1.HWBB	5.FWA	9.No Heat
2.HWCI	6.GravWA	10.Radiabt
3.H Pump	7.Electric	12.
Cool Type	**100%**	**9 None**
1.Refrig	4.W&C Air	7.
2.Evapor	5.	8.
3.H Pump	6.	9.None
Kitchen Style	**2 Typical**	
1.Modern	4.Obsolete	7.
2.Typical	5.	8.
3.Old Type	6.	9.None
Bath(s) Style	**2 Typical Bath(s)**	
1.Modern	4.Obsolete	7.
2.Typical	5.	8.
3.Old Type	6.	9.None
# Rooms	**5**	
# Bedrooms	**2**	
# Full Baths	**1**	
# Half Baths	**0**	
# Addn Fixtures	**0**	
# Fireplaces	**0**	

TRIO Software
A Division of Harris Computer Systems

Layout	**1 Typical**	
1.Typical	4.	7.
2.Inadeq	5.	8.
3.Horrid	6.	9.
Attic	**9 None**	
1.1/4 Fin	4.Full Fin	7.
2.1/2 Fin	5.Fl/Stair	8.
3.3/4 Fin	6.	9.None
Insulation	**1 Full**	
1.Full	4.Minimal	7.
2.Heavy	5.Partial	8.
3.Capped	6.	9.None
Unfinished %	**0%**	
Grade & Factor	**3 Average 100%**	
1.E Grade	4.B Grade	7.AAA Grad
2.D Grade	5.A Grade	8.SC Grade
3.C Grade	6.AA Grade	9.Same
SQFT (Footprint)	**1500**	
Condition	**4 Average**	
1.Poor	4.Avg	7.V G
2.Fair	5.Avg+	8.Exc
3.Avg-	6.Good	9.Same
Phys. % Good	**0%**	
Funct. % Good	**100%**	
Functional Code	**9 None**	
1.Incomp	4.Delap	7.Seasonal
2.O-Built	5.Bsmt	8.
3.Fire	6.2014 ADJ	9.None
Econ. % Good	**100%**	
Economic Code	**None**	
0.None	3.No Power	7.
1.Location	4.Generate	8.
2.Encroach	9.None	9.
Entrance Code	**0**	
1.Interior	4.Vacant	7.
2.Refusal	5.Estimate	8.
3.Informed	6.	9.
Information Code	**0**	
1.Owner	4.Agent	7.
2.Relative	5.Estimate	8.
3.Tenant	6.Other	9.

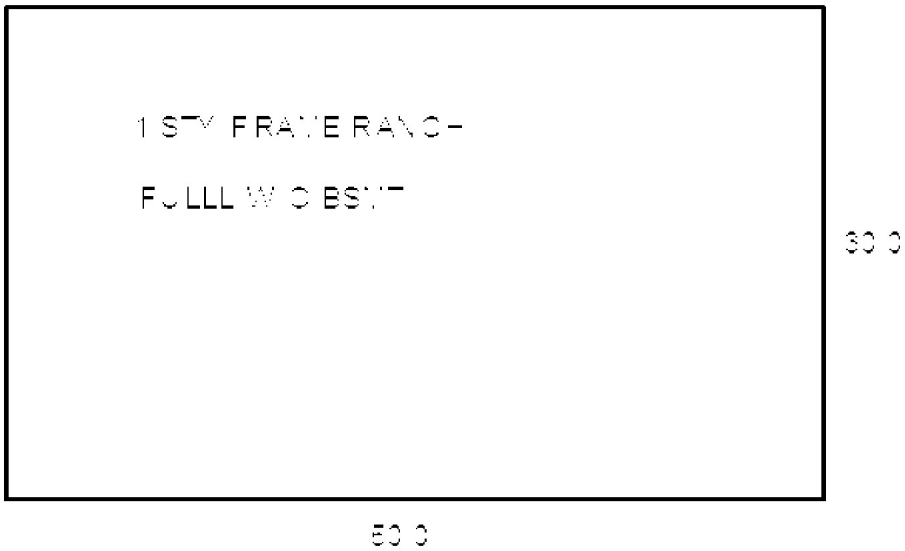

Date Inspected

Additions, Outbuildings & Improvements

Type	Year	Units	Grade	Cond	Phys.	Funct.	Sound Value
					%	%	
					%	%	
					%	%	
					%	%	
					%	%	
					%	%	
					%	%	
					%	%	
					%	%	
					%	%	

1.One Story Fram
2.Two Story Fram
3.Three Story Fr
4.1 & 1/2 Story
5.1 & 3/4 Story
6.2 & 1/2 Story
21.Open Frame Por
22.Encl Frame Por
23.Frame Garage
24.Frame Shed
25.Frame Bay Wind
26.1SFr Overhang
27.Unfin Basement
28.Unfinished Att
29.Finished Attic

Map Lot 106-006 Account 1728 Location 28 ZABRISKIE DRIVE Card 1 Of 2 10/01/2020

ZABRISKIE FAMILY PARTNERSHIP R.E.
C/O ANNE CASTREN
370 ANDERSON LANE
KALSIPELL MT 59901

B1796P588

Property Data

Neighborhood **11 Neighborhood 11**

Tree Growth Year **0**

TREE GROWTH RECERTIFY **0**

STATE SALE CODE **0**

Zone/Land Use **11 Residential**

Secondary Zone

Topography

1.Level	4.Below St	7.
2.Rolling	5.Low	8.
3.Above St	6.Swampy	9.

Utilities

1.Public	4.Dr Well	7.Cesspool
2.Water	5.Dug Well	8.
3.Sewer	6.Septic	9.None

Street **1 Paved**

1.Paved	4.Proposed	7.
2.Semi Imp	5.	8.
3.Gravel	6.	9.None

REVIEW STRUCTURE YEAR **0**

RENTAL? 0=NO 1=YES **0**

Sale Data

Sale Date

Price

Sale Type

1.Land	4.Mobile	7.
2.L & B	5.Other	8.
3.Building	6.	9.

Financing

1.Convent	4.Seller	7.
2.FHA/VA	5.Private	8.
3.Assumed	6.Cash	9.Unknown

Validity

1.Valid	4.Split	7.Changes
2.Related	5.Partial	8.Other
3.Distress	6.Exempt	9.Fr Ffclse

Verified

1.Buyer	4.Agent	7.Family
2.Seller	5.Pub Rec	8.Other
3.Lender	6.MLS	9.

Assessment Record

Year	Land	Buildings	Exempt	Total
2007	802,600	139,700	0	942,300
2008	802,600	139,700	0	942,300
2009	802,600	84,500	0	887,100
2010	802,600	84,500	0	887,100
2011	802,600	84,500	0	887,100
2012	802,600	84,500	0	887,100
2013	802,600	84,500	0	887,100
2014	802,600	84,500	0	887,100
2015	802,600	84,500	0	887,100
2018	802,600	83,000	0	885,600
2019	802,600	83,000	0	885,600
2020	802,600	83,000	0	885,600

Land Data

Front Foot	Type	Effective Frontage	Effective Depth	Influence Factor	Influence Code
11.Regular Lot				%	
12.Delta Triangle				%	
13.Nabla Triangle				%	
14.Rear Land				%	
15.Miscellaneous				%	
				%	
				%	
Square Foot		**Square Feet**			
16.Regular Lot				%	
17.Secondary Lot				%	
18.Excess Land				%	
19.Condominium				%	
20.Miscellaneous				%	
				%	
				%	
Fract. Acre		**Acreage/Sites**			
21.Homesite (Frac	21	1.00	100	%	0
22.Baselot (Fract	24	5.00	100	%	0
23.Misc (Fract)	40	2.10	100	%	0
Acres	44	2.00	100	%	0
24.Excess Acres 1	45	595.00	100	%	0
25.Excess Acres 5	43	1.00	100	%	0
26.Excess Acres 2				%	
27.Excess Acres 5					
28.Excess Acres 1					
29.Excess acres					

Total Acreage 8.10

Influence Codes

1.Unimproved
2.Excess Frtg
3.Topography
4.Size/Shape
5.Access
6.Restriction
7.Corner Infl
8.Environment
9.Fract Share
Acres
30.Industrial Sit
31.Working Waterf
32.Cultivated Cro
33.Pasture
34.Softwood (Farm
35.Mixed Wood (Fa
36.Hardwood (Farm
37.Softwood
38.Mixed Wood
39.Hardwood
40.Wasteland
41.Gravel Pit
42.Mobile Home Si
43.Location Base
44.Lot Improvemen
45.Waterfront A
46.Lobster Pound

Inspection Witnessed By:

X Date

No./Date	Description	Date Insp.

Notes:

Hancock 2020

Hancock 2020

Map Lot 106-006 | Account 1728 | Location 28 ZABRISKIE DRIVE | Card 1 Of 2 | 10/01/2020

Building Style	**2 Ranch**	
0.Uncoded	4.Cape	8.Log
1.Conv.	5.Garrison	9.Other
2.Ranch	6.Colonial	10.Dutch C
3.R Ranch	7.Contemp	11.Farmhou
Dwelling Units	**1**	
Other Units	**0**	
Stories	**1 One Story**	
1.1	4.1.5	7.3.5
2.2	5.1.75	8.
3.3	6.2.5	9.
Exterior Walls	**0 Uncoded**	
0.Uncoded	4.Asbestos	8.Stone
1.Wood	5.Stucco	9.Other
2.Vin/Al	6.Brick Ve	10.Concret
3.Compos.	7.Solid Br	12.
Roof Surface	**1 Asphalt Shingles**	
1.Asphalt	4.Composit	7.
2.Slate	5.Wood	8.
3.Metal	6.Other	9.
SF Masonry Trim	**0**	
OPEN-3-CUSTOM	**0**	
OPEN-4-CUSTOM	**0**	
Year Built	**1967**	
Year Remodeled	**0**	
Foundation	**2 Concrete Block**	
1.Concrete	4.Wood	7.
2.C Block	5.Slab	8.
3.Br/Stone	6.Piers	9.
Basement	**5 Crawl Space**	
1.1/4 Bmt	4.Full Bmt	7.
2.1/2 Bmt	5.None	8.
3.3/4 Bmt	6.	9.None
Bsmt Gar # Cars	**0**	
Wet Basement	**2 Damp Basement**	
1.Dry	4.	7.
2.Damp	5.	8.
3.Wet	6.	9.

SF Bsmt Living	**0**	
Fin Bsmt Grade	**0 0**	
OPEN-5-CUSTOMIZE	**0**	
Heat Type	**40%**	**7 Electric**
0.Uncoded	4.Steam	8.Fl/Wall
1.HWBB	5.FWA	9.No Heat
2.HWCI	6.GravWA	10.Radiabt
3.H Pump	7.Electric	12.
Cool Type	**100%**	**9 None**
1.Refrig	4.W&C Air	7.
2.Evapor	5.	8.
3.H Pump	6.	9.None
Kitchen Style	**2 Typical**	
1.Modern	4.Obsolete	7.
2.Typical	5.	8.
3.Old Type	6.	9.None
Bath(s) Style	**2 Typical Bath(s)**	
1.Modern	4.Obsolete	7.
2.Typical	5.	8.
3.Old Type	6.	9.None
# Rooms	**4**	
# Bedrooms	**2**	
# Full Baths	**1**	
# Half Baths	**1**	
# Addn Fixtures	**0**	
# Fireplaces	**1**	

TRIO Software
A Division of Harris Computer Systems

Layout	**1 Typical**	
1.Typical	4.	7.
2.Inadeq	5.	8.
3.Horrid	6.	9.
Attic	**9 None**	
1.1/4 Fin	4.Full Fin	7.
2.1/2 Fin	5.Fl/Stair	8.
3.3/4 Fin	6.	9.None
Insulation	**9 None**	
1.Full	4.Minimal	7.
2.Heavy	5.Partial	8.
3.Capped	6.	9.None
Unfinished %	**0%**	
Grade & Factor	**3 Average 100%**	
1.E Grade	4.B Grade	7.AAA Grad
2.D Grade	5.A Grade	8.SC Grade
3.C Grade	6.AA Grade	9.Same
SQFT (Footprint)	**1355**	
Condition	**3 Below Average**	
1.Poor	4.Avg	7.V G
2.Fair	5.Avg+	8.Exc
3.Avg-	6.Good	9.Same
Phys. % Good	**0%**	
Funct. % Good	**100%**	
Functional Code	**9 None**	
1.Incomp	4.Delap	7.Seasonal
2.O-Built	5.Bsmt	8.
3.Fire	6.2014 ADJ	9.None
Econ. % Good	**100%**	
Economic Code	**None**	
0.None	3.No Power	7.
1.Location	4.Generate	8.
2.Encroach	9.None	9.
Entrance Code	**0**	
1.Interior	4.Vacant	7.
2.Refusal	5.Estimate	8.
3.Informed	6.	9.
Information Code	**0**	
1.Owner	4.Agent	7.
2.Relative	5.Estimate	8.
3.Tenant	6.Other	9.

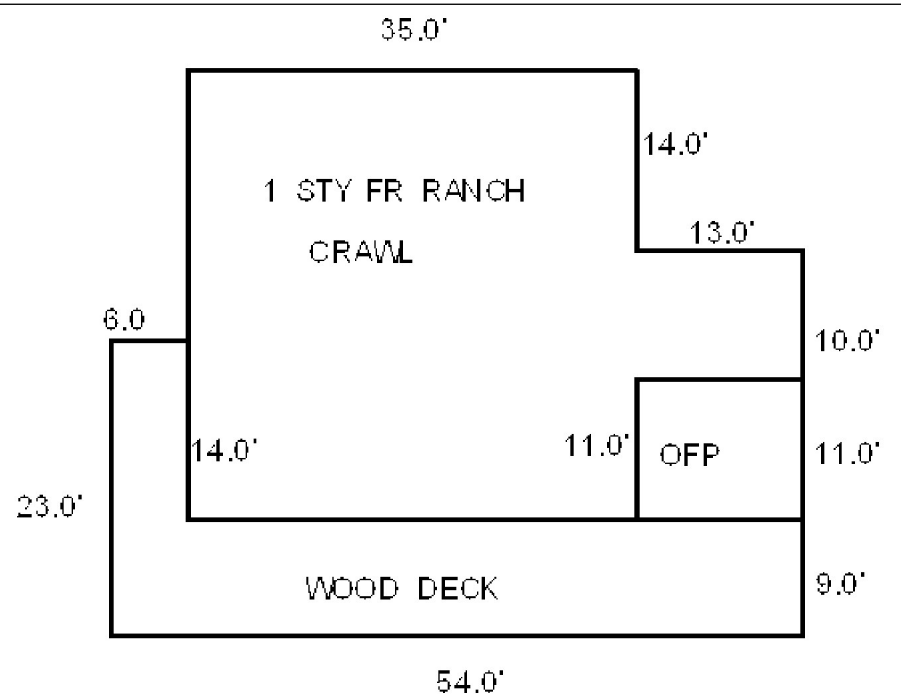

Date Inspected

Additions, Outbuildings & Improvements

Type	Year	Units	Grade	Cond	Phys.	Funct.	Sound Value
22 Encl Frame Porch	0	143	0 0	0	0 %	0 %	
68 Wood Deck	0	570	0 0	2	0 %	0 %	
					%	%	
					%	%	
					%	%	
					%	%	
					%	%	
					%	%	
					%	%	
					%	%	

1.One Story Fram
2.Two Story Fram
3.Three Story Fr
4.1 & 1/2 Story
5.1 & 3/4 Story
6.2 & 1/2 Story
21.Open Frame Por
22.Encl Frame Por
23.Frame Garage
24.Frame Shed
25.Frame Bay Wind
26.1SFr Overhang
27.Unfin Basement
28.Unfinished Att
29.Finished Attic

ZABRISKIE FAMILY PARTNERSHIP R.E.
C/O ANNE CASTREN
370 ANDERSON LANE
KALSIPELL MT 59901

B1796P588

Property Data

Neighborhood **11 Neighborhood 11**

Tree Growth Year **0**

TREE GROWTH RECERTIFY **0**

STATE SALE CODE **0**

Zone/Land Use **11 Residential**

Secondary Zone

Topography

1.Level	4.Below St	7.
2.Rolling	5.Low	8.
3.Above St	6.Swampy	9.

Utilities

1.Public	4.Dr Well	7.Cesspool
2.Water	5.Dug Well	8.
3.Sewer	6.Septic	9.None

Street **1 Paved**

1.Paved	4.Proposed	7.
2.Semi Imp	5.	8.
3.Gravel	6.	9.None

REVIEW STRUCTURE YEAR **0**

RENTAL? 0=NO 1=YES **0**

Sale Data

Sale Date

Price

Sale Type

1.Land	4.Mobile	7.
2.L & B	5.Other	8.
3.Building	6.	9.

Financing

1.Convent	4.Seller	7.
2.FHA/VA	5.Private	8.
3.Assumed	6.Cash	9.Unknown

Validity

1.Valid	4.Split	7.Changes
2.Related	5.Partial	8.Other
3.Distress	6.Exempt	9.Fr Ffclse

Verified

1.Buyer	4.Agent	7.Family
2.Seller	5.Pub Rec	8.Other
3.Lender	6.MLS	9.

Assessment Record

Year	Land	Buildings	Exempt	Total
2007	0	251,600	0	251,600
2008	0	251,600	0	251,600
2009	0	251,600	0	251,600
2010	0	251,600	0	251,600
2011	0	251,600	0	251,600
2012	0	251,600	0	251,600
2013	0	251,600	0	251,600
2014	0	251,600	0	251,600
2015	0	251,600	0	251,600
2018	0	248,900	0	248,900
2019	0	248,900	0	248,900
2020	0	248,900	0	248,900

Land Data

Front Foot	Type	Effective Frontage	Effective Depth	Influence Factor	Influence Code
11.Regular Lot				%	
12.Delta Triangle				%	
13.Nabla Triangle				%	
14.Rear Land				%	
15.Miscellaneous				%	
				%	
				%	
Square Foot		**Square Feet**			
16.Regular Lot				%	
17.Secondary Lot				%	
18.Excess Land				%	
19.Condominium				%	
20.Miscellaneous				%	
				%	
				%	
Fract. Acre		**Acreage/Sites**			
21.Homesite (Frac				%	
22.Baselot (Fract				%	
23.Misc (Fract)				%	
Acres				%	
24.Excess Acres 1				%	
25.Excess Acres 5				%	
26.Excess Acres 2				%	
27.Excess Acres 5				%	
28.Excess Acres 1				%	
29.Excess acres				%	

Total Acreage 0.00

Influence Codes

1.Unimproved
2.Excess Frtg
3.Topography
4.Size/Shape
5.Access
6.Restriction
7.Corner Infl
8.Environment
9.Fract Share
Acres
30.Industrial Sit
31.Working Waterf
32.Cultivated Cro
33.Pasture
34.Softwood (Farm
35.Mixed Wood (Fa
36.Hardwood (Farm
37.Softwood
38.Mixed Wood
39.Hardwood
40.Wasteland
41.Gravel Pit
42.Mobile Home Si
43.Location Base
44.Lot Improvemen
45.Waterfront A
46.Lobster Pound

Inspection Witnessed By:

X Date

No./Date	Description	Date Insp.

Notes:

Hancock 2020

Hancock 2020

Map Lot 106-006 | Account 1728 | Location 10 ZABRISKIE DRIVE | Card 2 Of 2 | 10/01/2020

Building Style	**1 Conventional**	
0.Uncoded	4.Cape	8.Log
1.Conv.	5.Garrison	9.Other
2.Ranch	6.Colonial	10.Dutch C
3.R Ranch	7.Contemp	11.Farmhou
Dwelling Units	**1**	
Other Units	**0**	
Stories	**1 One Story**	
1.1	4.1.5	7.3.5
2.2	5.1.75	8.
3.3	6.2.5	9.
Exterior Walls	**1 Wood Siding**	
0.Uncoded	4.Asbestos	8.Stone
1.Wood	5.Stucco	9.Other
2.Vin/Al	6.Brick Ve	10.Concret
3.Compos.	7.Solid Br	12.
Roof Surface	**1 Asphalt Shingles**	
1.Asphalt	4.Composit	7.
2.Slate	5.Wood	8.
3.Metal	6.Other	9.
SF Masonry Trim	**0**	
OPEN-3-CUSTOM	**0**	
OPEN-4-CUSTOM	**0**	
Year Built	**2000**	
Year Remodeled	**0**	
Foundation	**1 Concrete**	
1.Concrete	4.Wood	7.
2.C Block	5.Slab	8.
3.Br/Stone	6.Piers	9.
Basement	**4 Full Basement**	
1.1/4 Bmt	4.Full Bmt	7.
2.1/2 Bmt	5.None	8.
3.3/4 Bmt	6.	9.None
Bsmt Gar # Cars	**0**	
Wet Basement	**1 Dry Basement**	
1.Dry	4.	7.
2.Damp	5.	8.
3.Wet	6.	9.

SF Bsmt Living	**0**	
Fin Bsmt Grade	**0 0**	
OPEN-5-CUSTOMIZE	**0**	
Heat Type	**100%**	**1 Hot Water BB**
0.Uncoded	4.Steam	8.Fl/Wall
1.HWBB	5.FWA	9.No Heat
2.HWCI	6.GravWA	10.Radiabt
3.H Pump	7.Electric	12.
Cool Type	**100%**	**9 None**
1.Refrig	4.W&C Air	7.
2.Evapor	5.	8.
3.H Pump	6.	9.None
Kitchen Style	**2 Typical**	
1.Modern	4.Obsolete	7.
2.Typical	5.	8.
3.Old Type	6.	9.None
Bath(s) Style	**2 Typical Bath(s)**	
1.Modern	4.Obsolete	7.
2.Typical	5.	8.
3.Old Type	6.	9.None
# Rooms	**7**	
# Bedrooms	**3**	
# Full Baths	**2**	
# Half Baths	**0**	
# Addn Fixtures	**0**	
# Fireplaces	**0**	

TRIO Software
A Division of Harris Computer Systems

Layout	**1 Typical**	
1.Typical	4.	7.
2.Inadeq	5.	8.
3.Horrid	6.	9.
Attic	**9 None**	
1.1/4 Fin	4.Full Fin	7.
2.1/2 Fin	5.Fl/Stair	8.
3.3/4 Fin	6.	9.None
Insulation	**1 Full**	
1.Full	4.Minimal	7.
2.Heavy	5.Partial	8.
3.Capped	6.	9.None
Unfinished %	**0%**	
Grade & Factor	**4 Good 100%**	
1.E Grade	4.B Grade	7.AAA Grad
2.D Grade	5.A Grade	8.SC Grade
3.C Grade	6.AA Grade	9.Same
SQFT (Footprint)	**1680**	
Condition	**4 Average**	
1.Poor	4.Avg	7.V G
2.Fair	5.Avg+	8.Exc
3.Avg-	6.Good	9.Same
Phys. % Good	**0%**	
Funct. % Good	**100%**	
Functional Code	**9 None**	
1.Incomp	4.Delap	7.Seasonal
2.O-Built	5.Bsmt	8.
3.Fire	6.2014 ADJ	9.None
Econ. % Good	**100%**	
Economic Code	**None**	
0.None	3.No Power	7.
1.Location	4.Generate	8.
2.Encroach	9.None	9.
Entrance Code	**0**	
1.Interior	4.Vacant	7.
2.Refusal	5.Estimate	8.
3.Informed	6.	9.
Information Code	**0**	
1.Owner	4.Agent	7.
2.Relative	5.Estimate	8.
3.Tenant	6.Other	9.

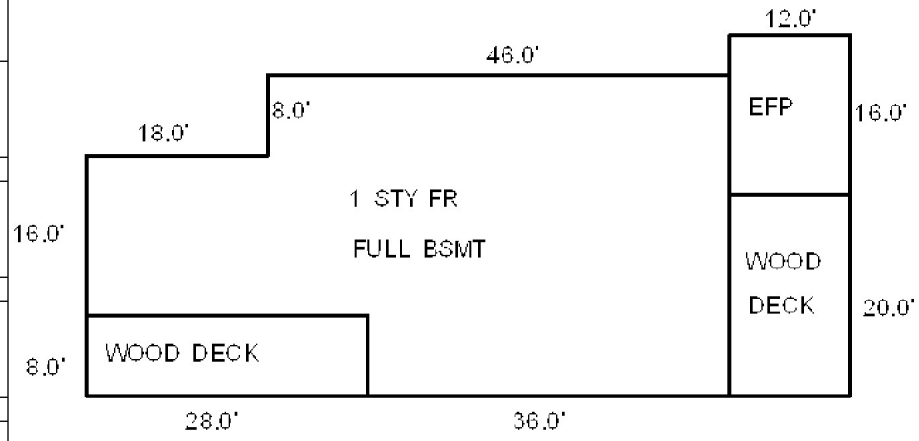

Date Inspected

Additions, Outbuildings & Improvements

Type	Year	Units	Grade	Cond	Phys.	Funct.	Sound Value
68 Wood Deck	0	224	0 0	0	0 %	0 %	
68 Wood Deck	0	240	0 0	0	0 %	0 %	
22 Encl Frame Porch	0	192	0 0	0	0 %	0 %	
					%	%	
					%	%	
					%	%	
					%	%	
					%	%	
					%	%	
					%	%	

1.One Story Fram
2.Two Story Fram
3.Three Story Fr
4.1 & 1/2 Story
5.1 & 3/4 Story
6.2 & 1/2 Story
21.Open Frame Por
22.Encl Frame Por
23.Frame Garage
24.Frame Shed
25.Frame Bay Wind
26.1SFr Overhang
27.Unfin Basement
28.Unfinished Att
29.Finished Attic

Map Lot 106-007 Account 1149 Location POINT ROAD Card 1 Of 1 10/01/2020

LOUNDER-HASKINS, GERTRUDE
P O BOX 97
HANCOCK ME 04640

B1909P67

Inspection Witnessed By:

X Date

No./Date	Description	Date Insp.

Notes:

Hancock 2020

Property Data

Neighborhood **10 Neighborhood 10**

Tree Growth Year **0**

TREE GROWTH RECERTIFY **0**

STATE SALE CODE **0**

Zone/Land Use **11 Residential**

Secondary Zone

Topography

1.Level	4.Below St	7.
2.Rolling	5.Low	8.
3.Above St	6.Swampy	9.

Utilities

1.Public	4.Dr Well	7.Cesspool
2.Water	5.Dug Well	8.
3.Sewer	6.Septic	9.None

Street

1.Paved	4.Proposed	7.
2.Semi Imp	5.	8.
3.Gravel	6.	9.None

REVIEW STRUCTURE YEAR **0**

RENTAL? 0=NO 1=YES **0**

Sale Data

Sale Date

Price

Sale Type

1.Land	4.Mobile	7.
2.L & B	5.Other	8.
3.Building	6.	9.

Financing

1.Convent	4.Seller	7.
2.FHA/VA	5.Private	8.
3.Assumed	6.Cash	9.Unknown

Validity

1.Valid	4.Split	7.Changes
2.Related	5.Partial	8.Other
3.Distress	6.Exempt	9.Fr Ffclse

Verified

1.Buyer	4.Agent	7.Family
2.Seller	5.Pub Rec	8.Other
3.Lender	6.MLS	9.

Assessment Record

Year	Land	Buildings	Exempt	Total
2007	87,200	0	0	87,200
2008	101,200	0	0	101,200
2009	101,200	0	0	101,200
2010	101,200	0	0	101,200
2011	101,200	0	0	101,200
2012	101,200	0	0	101,200
2013	101,200	0	0	101,200
2014	101,200	0	0	101,200
2015	101,200	0	0	101,200
2016	101,200	0	0	101,200
2017	101,200	0	0	101,200
2018	101,200	0	0	101,200
2019	101,200	0	0	101,200
2020	101,200	0	0	101,200

Land Data

Front Foot	Type	Effective Frontage	Effective Depth	Influence Factor	Influence Code
11.Regular Lot				%	
12.Delta Triangle				%	
13.Nabla Triangle				%	
14.Rear Land				%	
15.Miscellaneous				%	
				%	
				%	
Square Foot		**Square Feet**			
16.Regular Lot				%	
17.Secondary Lot				%	
18.Excess Land				%	
19.Condominium				%	
20.Miscellaneous				%	
				%	
				%	
Fract. Acre		**Acreage/Sites**			
21.Homesite (Frac	21	1.00	100	%	0
22.Baselot (Fract	24	4.00	100	%	0
23.Misc (Fract)	40	4.20	100	%	0
Acres	44	1.00	100	%	0
24.Excess Acres 1	25	4.00	100	%	0
25.Excess Acres 5				%	
26.Excess Acres 2				%	
27.Excess Acres 5					
28.Excess Acres 1					
29.Excess acres					

Total Acreage 13.20

Influence Codes

1.Unimproved
2.Excess Frtg
3.Topography
4.Size/Shape
5.Access
6.Restriction
7.Corner Infl
8.Environment
9.Fract Share
Acres
30.Industrial Sit
31.Working Waterf
32.Cultivated Cro
33.Pasture
34.Softwood (Farm
35.Mixed Wood (Fa
36.Hardwood (Farm
37.Softwood
38.Mixed Wood
39.Hardwood
40.Wasteland
41.Gravel Pit
42.Mobile Home Si
43.Location Base
44.Lot Improvemen
45.Waterfront A
46.Lobster Pound

Hancock 2020

Map Lot 106-007 | Account 1149 | Location POINT ROAD | Card 1 Of 1 | 10/01/2020

Building Style **0 Uncoded**		
0.Uncoded	4.Cape	8.Log
1.Conv.	5.Garrison	9.Other
2.Ranch	6.Colonial	10.Dutch C
3.R Ranch	7.Contemp	11.Farmhou
Dwelling Units **0**		
Other Units **0**		
Stories **0**		
1.1	4.1.5	7.3.5
2.2	5.1.75	8.
3.3	6.2.5	9.
Exterior Walls **0 Uncoded**		
0.Uncoded	4.Asbestos	8.Stone
1.Wood	5.Stucco	9.Other
2.Vin/Al	6.Brick Ve	10.Concret
3.Compos.	7.Solid Br	12.
Roof Surface **0**		
1.Asphalt	4.Composit	7.
2.Slate	5.Wood	8.
3.Metal	6.Other	9.
SF Masonry Trim **0**		
OPEN-3-CUSTOM **0**		
OPEN-4-CUSTOM **0**		
Year Built **0**		
Year Remodeled **0**		
Foundation **0**		
1.Concrete	4.Wood	7.
2.C Block	5.Slab	8.
3.Br/Stone	6.Piers	9.
Basement **0**		
1.1/4 Bmt	4.Full Bmt	7.
2.1/2 Bmt	5.None	8.
3.3/4 Bmt	6.	9.None
Bsmt Gar # Cars **0**		
Wet Basement **0**		
1.Dry	4.	7.
2.Damp	5.	8.
3.Wet	6.	9.

SF Bsmt Living **0**		
Fin Bsmt Grade **0 0**		
OPEN-5-CUSTOMIZE **0**		
Heat Type **100%** **0 Uncoded**		
0.Uncoded	4.Steam	8.Fl/Wall
1.HWBB	5.FWA	9.No Heat
2.HWCI	6.GravWA	10.Radiabt
3.H Pump	7.Electric	12.
Cool Type **0%** **9 None**		
1.Refrig	4.W&C Air	7.
2.Evapor	5.	8.
3.H Pump	6.	9.None
Kitchen Style **0**		
1.Modern	4.Obsolete	7.
2.Typical	5.	8.
3.Old Type	6.	9.None
Bath(s) Style **0**		
1.Modern	4.Obsolete	7.
2.Typical	5.	8.
3.Old Type	6.	9.None
# Rooms **0**		
# Bedrooms **0**		
# Full Baths **0**		
# Half Baths **0**		
# Addn Fixtures **0**		
# Fireplaces **0**		

TRIO Software
A Division of Harris Computer Systems

Layout **0**		
1.Typical	4.	7.
2.Inadeq	5.	8.
3.Horrid	6.	9.
Attic **0**		
1.1/4 Fin	4.Full Fin	7.
2.1/2 Fin	5.Fl/Stair	8.
3.3/4 Fin	6.	9.None
Insulation **0**		
1.Full	4.Minimal	7.
2.Heavy	5.Partial	8.
3.Capped	6.	9.None
Unfinished % **0%**		
Grade & Factor **0 0%**		
1.E Grade	4.B Grade	7.AAA Grad
2.D Grade	5.A Grade	8.SC Grade
3.C Grade	6.AA Grade	9.Same
SQFT (Footprint) **0**		
Condition **0**		
1.Poor	4.Avg	7.V G
2.Fair	5.Avg+	8.Exc
3.Avg-	6.Good	9.Same
Phys. % Good **0%**		
Funct. % Good **100%**		
Functional Code **9 None**		
1.Incomp	4.Delap	7.Seasonal
2.O-Built	5.Bsmt	8.
3.Fire	6.2014 ADJ	9.None
Econ. % Good **100%**		
Economic Code **None**		
0.None	3.No Power	7.
1.Location	4.Generate	8.
2.Encroach	9.None	9.
Entrance Code **0**		
1.Interior	4.Vacant	7.
2.Refusal	5.Estimate	8.
3.Informed	6.	9.
Information Code **0**		
1.Owner	4.Agent	7.
2.Relative	5.Estimate	8.
3.Tenant	6.Other	9.

Date Inspected

Additions, Outbuildings & Improvements

Type	Year	Units	Grade	Cond	Phys.	Funct.	Sound Value
					%	%	
					%	%	
					%	%	
					%	%	
					%	%	
					%	%	
					%	%	
					%	%	
					%	%	
					%	%	

1.One Story Fram
2.Two Story Fram
3.Three Story Fr
4.1 & 1/2 Story
5.1 & 3/4 Story
6.2 & 1/2 Story
21.Open Frame Por
22.Encl Frame Por
23.Frame Garage
24.Frame Shed
25.Frame Bay Wind
26.1SFr Overhang
27.Unfin Basement
28.Unfinished Att
29.Finished Attic

Map Lot 106-008 Account 1984 Location 739 POINT ROAD Card 1 Of 1 10/01/2020

LOUNDER-HASKINS, GERTRUDE
CROWLEY, PAMELA ANN
P O BOX 97
HANCOCK ME 04640

B4036P50 B4891P16

Previous Owner
SPRAGUE, BETTY E.
P O BOX 5041

ELLSWORTH ME 04605
Sale Date: 11/13/2007

Inspection Witnessed By:

X Date

No./Date	Description	Date Insp.

Notes:

Property Data

Neighborhood **10 Neighborhood 10**

Tree Growth Year **0**

TREE GROWTH RECERTIFY **0**

STATE SALE CODE **0**

Zone/Land Use **11 Residential**

Secondary Zone

Topography

1.Level 4.Below St 7.
2.Rolling 5.Low 8.
3.Above St 6.Swampy 9.

Utilities

1.Public 4.Dr Well 7.Cesspool
2.Water 5.Dug Well 8.
3.Sewer 6.Septic 9.None

Street **1 Paved**

1.Paved 4.Proposed 7.
2.Semi Imp 5. 8.
3.Gravel 6. 9.None

REVIEW STRUCTURE YEAR **0**

RENTAL? 0=NO 1=YES **0**

Sale Data

Sale Date **11/13/2007**

Price

Sale Type **2 Land & Buildings**

1.Land 4.Mobile 7.
2.L & B 5.Other 8.
3.Building 6. 9.

Financing **9 Unknown**

1.Convent 4.Seller 7.
2.FHA/VA 5.Private 8.
3.Assumed 6.Cash 9.Unknown

Validity **8 Other Non Valid**

1.Valid 4.Split 7.Changes
2.Related 5.Partial 8.Other
3.Distress 6.Exempt 9.Fr Ffclse

Verified **5 Public Record**

1.Buyer 4.Agent 7.Family
2.Seller 5.Pub Rec 8.Other
3.Lender 6.MLS 9.

Assessment Record

Year	Land	Buildings	Exempt	Total
2007	76,500	132,000	0	208,500
2008	76,500	132,000	0	208,500
2009	76,500	132,000	0	208,500
2010	76,500	132,000	0	208,500
2011	76,500	132,000	0	208,500
2012	76,500	132,000	0	208,500
2013	76,500	132,000	0	208,500
2014	76,500	132,000	0	208,500
2015	76,500	132,000	0	208,500
2016	76,500	132,000	0	208,500
2017	76,500	132,000	0	208,500
2018	76,500	132,000	0	208,500
2019	76,500	132,000	0	208,500
2020	76,500	132,000	0	208,500

Land Data

Front Foot	Type	Effective Frontage	Effective Depth	Influence Factor	Influence Code
11.Regular Lot				%	
12.Delta Triangle				%	
13.Nabla Triangle				%	
14.Rear Land				%	
15.Miscellaneous				%	
				%	
				%	
Square Foot		**Square Feet**			
16.Regular Lot				%	
17.Secondary Lot				%	
18.Excess Land				%	
19.Condominium				%	
20.Miscellaneous				%	
				%	
				%	
Fract. Acre		**Acreage/Sites**			
21.Homesite (Frac	21	1.00	100	%	0
22.Baselot (Fract	24	1.00	100	%	0
23.Misc (Fract)	44	1.00	100	%	0
Acres				%	
24.Excess Acres 1				%	
25.Excess Acres 5				%	
26.Excess Acres 2				%	
27.Excess Acres 5				%	
28.Excess Acres 1				%	
29.Excess acres				%	

Total Acreage 2.00

Influence Codes

1.Unimproved
2.Excess Frtg
3.Topography
4.Size/Shape
5.Access
6.Restriction
7.Corner Infl
8.Environment
9.Fract Share
Acres
30.Industrial Sit
31.Working Waterf
32.Cultivated Cro
33.Pasture
34.Softwood (Farm
35.Mixed Wood (Fa
36.Hardwood (Farm
37.Softwood
38.Mixed Wood
39.Hardwood
40.Wasteland
41.Gravel Pit
42.Mobile Home Si
43.Location Base
44.Lot Improvemen
45.Waterfront A
46.Lobster Pound

Hancock 2020

Hancock 2020

Map Lot 106-008 | Account 1984 | Location 739 POINT ROAD | Card 1 Of 1 | 10/01/2020

Building Style **2 Ranch**		
0.Uncoded	4.Cape	8.Log
1.Conv.	5.Garrison	9.Other
2.Ranch	6.Colonial	10.Dutch C
3.R Ranch	7.Contemp	11.Farmhou
Dwelling Units **1**		
Other Units **0**		
Stories **1 One Story**		
1.1	4.1.5	7.3.5
2.2	5.1.75	8.
3.3	6.2.5	9.
Exterior Walls **2 Vinyl/Aluminum**		
0.Uncoded	4.Asbestos	8.Stone
1.Wood	5.Stucco	9.Other
2.Vin/Al	6.Brick Ve	10.Concret
3.Compos.	7.Solid Br	12.
Roof Surface **1 Asphalt Shingles**		
1.Asphalt	4.Composit	7.
2.Slate	5.Wood	8.
3.Metal	6.Other	9.
SF Masonry Trim **0**		
OPEN-3-CUSTOM **0**		
OPEN-4-CUSTOM **0**		
Year Built **2004**		
Year Remodeled **0**		
Foundation **1 Concrete**		
1.Concrete	4.Wood	7.
2.C Block	5.Slab	8.
3.Br/Stone	6.Piers	9.
Basement **4 Full Basement**		
1.1/4 Bmt	4.Full Bmt	7.
2.1/2 Bmt	5.None	8.
3.3/4 Bmt	6.	9.None
Bsmt Gar # Cars **0**		
Wet Basement **1 Dry Basement**		
1.Dry	4.	7.
2.Damp	5.	8.
3.Wet	6.	9.

SF Bsmt Living **0**		
Fin Bsmt Grade **0 0**		
OPEN-5-CUSTOMIZE **0**		
Heat Type **100%** **1 Hot Water BB**		
0.Uncoded	4.Steam	8.Fl/Wall
1.HWBB	5.FWA	9.No Heat
2.HWCI	6.GravWA	10.Radiabt
3.H Pump	7.Electric	12.
Cool Type **100%** **9 None**		
1.Refrig	4.W&C Air	7.
2.Evapor	5.	8.
3.H Pump	6.	9.None
Kitchen Style **2 Typical**		
1.Modern	4.Obsolete	7.
2.Typical	5.	8.
3.Old Type	6.	9.None
Bath(s) Style **2 Typical Bath(s)**		
1.Modern	4.Obsolete	7.
2.Typical	5.	8.
3.Old Type	6.	9.None
# Rooms **5**		
# Bedrooms **2**		
# Full Baths **1**		
# Half Baths **0**		
# Addn Fixtures **0**		
# Fireplaces **0**		

TRIO Software
A Division of Harris Computer Systems

Layout **1 Typical**		
1.Typical	4.	7.
2.Inadeq	5.	8.
3.Horrid	6.	9.
Attic **9 None**		
1.1/4 Fin	4.Full Fin	7.
2.1/2 Fin	5.Fl/Stair	8.
3.3/4 Fin	6.	9.None
Insulation **1 Full**		
1.Full	4.Minimal	7.
2.Heavy	5.Partial	8.
3.Capped	6.	9.None
Unfinished % **0%**		
Grade & Factor **3 Average 90%**		
1.E Grade	4.B Grade	7.AAA Grad
2.D Grade	5.A Grade	8.SC Grade
3.C Grade	6.AA Grade	9.Same
SQFT (Footprint) **1344**		
Condition **4 Average**		
1.Poor	4.Avg	7.V G
2.Fair	5.Avg+	8.Exc
3.Avg-	6.Good	9.Same
Phys. % Good **0%**		
Funct. % Good **100%**		
Functional Code **9 None**		
1.Incomp	4.Delap	7.Seasonal
2.O-Built	5.Bsmt	8.
3.Fire	6.2014 ADJ	9.None
Econ. % Good **100%**		
Economic Code **None**		
0.None	3.No Power	7.
1.Location	4.Generate	8.
2.Encroach	9.None	9.
Entrance Code **0**		
1.Interior	4.Vacant	7.
2.Refusal	5.Estimate	8.
3.Informed	6.	9.
Information Code **0**		
1.Owner	4.Agent	7.
2.Relative	5.Estimate	8.
3.Tenant	6.Other	9.

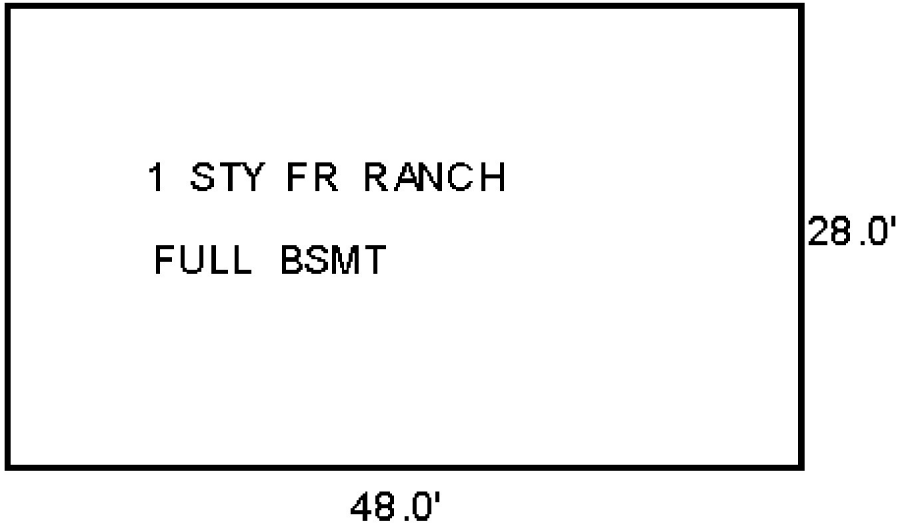

Date Inspected

Additions, Outbuildings & Improvements

Type	Year	Units	Grade	Cond	Phys.	Funct.	Sound Value
					%	%	
					%	%	
					%	%	
					%	%	
					%	%	
					%	%	
					%	%	
					%	%	
					%	%	
					%	%	

1.One Story Fram
2.Two Story Fram
3.Three Story Fr
4.1 & 1/2 Story
5.1 & 3/4 Story
6.2 & 1/2 Story
21.Open Frame Por
22.Encl Frame Por
23.Frame Garage
24.Frame Shed
25.Frame Bay Wind
26.1SFr Overhang
27.Unfin Basement
28.Unfinished Att
29.Finished Attic

Map Lot 106-009 Account 1603 Location 52 TROWBRIDGE ROAD Card 1 Of 2 10/01/2020

KUNHARDT, PETER, SR. & SUZANNE
20 HOG HILL ROAD
CHAPPAQUA NY 10514

B860P576 B5961P97

Previous Owner
TROWBRIDGE WELLS CORP.
109 EAST 101ST STREET

NEW YORK NY 10029
Sale Date: 12/20/2012

Inspection Witnessed By:

X Date

No./Date	Description	Date Insp.

Notes:

Hancock 2020

Property Data

Neighborhood **11 Neighborhood 11**

Tree Growth Year **0**

TREE GROWTH RECERTIFY **0**

STATE SALE CODE **0**

Zone/Land Use **11 Residential**

Secondary Zone

Topography

1.Level 4.Below St 7.
2.Rolling 5.Low 8.
3.Above St 6.Swampy 9.

Utilities

1.Public 4.Dr Well 7.Cesspool
2.Water 5.Dug Well 8.
3.Sewer 6.Septic 9.None

Street **1 Paved**

1.Paved 4.Proposed 7.
2.Semi Imp 5. 8.
3.Gravel 6. 9.None

REVIEW STRUCTURE YEAR **0**

RENTAL? 0=NO 1=YES **0**

Sale Data

Sale Date **12/20/2012**

Price

Sale Type **2 Land & Buildings**

1.Land 4.Mobile 7.
2.L & B 5.Other 8.
3.Building 6. 9.

Financing **9 Unknown**

1.Convent 4.Seller 7.
2.FHA/VA 5.Private 8.
3.Assumed 6.Cash 9.Unknown

Validity **2 Related Parties**

1.Valid 4.Split 7.Changes
2.Related 5.Partial 8.Other
3.Distress 6.Exempt 9.Fr Ffclse

Verified **5 Public Record**

1.Buyer 4.Agent 7.Family
2.Seller 5.Pub Rec 8.Other
3.Lender 6.MLS 9.

Assessment Record

Year	Land	Buildings	Exempt	Total
2007	555,600	525,300	0	1,080,900
2008	555,600	558,500	0	1,114,100
2009	555,600	558,500	0	1,114,100
2010	555,600	558,500	0	1,114,100
2011	555,600	558,500	0	1,114,100
2012	555,600	558,500	0	1,114,100
2013	433,900	558,500	0	992,400
2014	433,900	614,400	0	1,048,300
2015	433,900	614,400	0	1,048,300
2018	433,900	614,400	0	1,048,300
2019	433,900	614,400	0	1,048,300
2020	433,900	614,400	0	1,048,300

Land Data

Front Foot	Type	Effective Frontage	Effective Depth	Influence Factor	Influence Code
11.Regular Lot				%	
12.Delta Triangle				%	
13.Nabla Triangle				%	
14.Rear Land				%	
15.Miscellaneous				%	
				%	
				%	
Square Foot		**Square Feet**			
16.Regular Lot				%	
17.Secondary Lot				%	
18.Excess Land				%	
19.Condominium				%	
20.Miscellaneous				%	
				%	
				%	
Fract. Acre		**Acreage/Sites**			
21.Homesite (Frac	21	1.00	100	%	0
22.Baselot (Fract	44	3.00	100	%	0
23.Misc (Fract)	45	178.00	100	%	0
Acres	43	1.00	100	%	0
24.Excess Acres 1	24	4.00	100	%	0
25.Excess Acres 5	25	4.98	100	%	0
26.Excess Acres 2				%	
27.Excess Acres 5					
28.Excess Acres 1					
29.Excess acres					

Total Acreage 9.98

Influence Codes

1.Unimproved
2.Excess Frtg
3.Topography
4.Size/Shape
5.Access
6.Restriction
7.Corner Infl
8.Environment
9.Fract Share
Acres
30.Industrial Sit
31.Working Waterf
32.Cultivated Cro
33.Pasture
34.Softwood (Farm
35.Mixed Wood (Fa
36.Hardwood (Farm
37.Softwood
38.Mixed Wood
39.Hardwood
40.Wasteland
41.Gravel Pit
42.Mobile Home Si
43.Location Base
44.Lot Improvemen
45.Waterfront A
46.Lobster Pound

Hancock 2020

Map Lot 106-009 | Account 1603 | Location 52 TROWBRIDGE ROAD | Card 1 Of 2 | 10/01/2020

Building Style	**1 Conventional**	
0.Uncoded	4.Cape	8.Log
1.Conv.	5.Garrison	9.Other
2.Ranch	6.Colonial	10.Dutch C
3.R Ranch	7.Contemp	11.Farmhou
Dwelling Units	**1**	
Other Units	**0**	
Stories	**5 One & 3/4 Story**	
1.1	4.1.5	7.3.5
2.2	5.1.75	8.
3.3	6.2.5	9.
Exterior Walls	**1 Wood Siding**	
0.Uncoded	4.Asbestos	8.Stone
1.Wood	5.Stucco	9.Other
2.Vin/Al	6.Brick Ve	10.Concret
3.Compos.	7.Solid Br	12.
Roof Surface	**5 Wood Shingles**	
1.Asphalt	4.Composit	7.
2.Slate	5.Wood	8.
3.Metal	6.Other	9.
SF Masonry Trim	**0**	
OPEN-3-CUSTOM	**0**	
OPEN-4-CUSTOM	**0**	
Year Built	**1925**	
Year Remodeled	**2014**	
Foundation	**1 Concrete**	
1.Concrete	4.Wood	7.
2.C Block	5.Slab	8.
3.Br/Stone	6.Piers	9.
Basement	**9 No Basement**	
1.1/4 Bmt	4.Full Bmt	7.
2.1/2 Bmt	5.None	8.
3.3/4 Bmt	6.	9.None
Bsmt Gar # Cars	**0**	
Wet Basement	**9 No Basement**	
1.Dry	4.	7.
2.Damp	5.	8.
3.Wet	6.	9.

SF Bsmt Living	**0**	
Fin Bsmt Grade	**0 0**	
OPEN-5-CUSTOMIZE	**0**	
Heat Type	**100%**	**9 Not Heated**
0.Uncoded	4.Steam	8.Fl/Wall
1.HWBB	5.FWA	9.No Heat
2.HWCI	6.GravWA	10.Radiabt
3.H Pump	7.Electric	12.
Cool Type	**100%**	**9 None**
1.Refrig	4.W&C Air	7.
2.Evapor	5.	8.
3.H Pump	6.	9.None
Kitchen Style	**2 Typical**	
1.Modern	4.Obsolete	7.
2.Typical	5.	8.
3.Old Type	6.	9.None
Bath(s) Style	**2 Typical Bath(s)**	
1.Modern	4.Obsolete	7.
2.Typical	5.	8.
3.Old Type	6.	9.None
# Rooms	**12**	
# Bedrooms	**5**	
# Full Baths	**5**	
# Half Baths	**0**	
# Addn Fixtures	**1**	
# Fireplaces	**4**	

TRIO Software
A Division of Harris Computer Systems

Layout	**1 Typical**	
1.Typical	4.	7.
2.Inadeq	5.	8.
3.Horrid	6.	9.
Attic	**0**	
1.1/4 Fin	4.Full Fin	7.
2.1/2 Fin	5.Fl/Stair	8.
3.3/4 Fin	6.	9.None
Insulation	**1 Full**	
1.Full	4.Minimal	7.
2.Heavy	5.Partial	8.
3.Capped	6.	9.None
Unfinished %	**0%**	
Grade & Factor	**5 Very Good 110%**	
1.E Grade	4.B Grade	7.AAA Grad
2.D Grade	5.A Grade	8.SC Grade
3.C Grade	6.AA Grade	9.Same
SQFT (Footprint)	**2114**	
Condition	**6 Good**	
1.Poor	4.Avg	7.V G
2.Fair	5.Avg+	8.Exc
3.Avg-	6.Good	9.Same
Phys. % Good	**0%**	
Funct. % Good	**100%**	
Functional Code	**9 None**	
1.Incomp	4.Delap	7.Seasonal
2.O-Built	5.Bsmt	8.
3.Fire	6.2014 ADJ	9.None
Econ. % Good	**100%**	
Economic Code	**None**	
0.None	3.No Power	7.
1.Location	4.Generate	8.
2.Encroach	9.None	9.
Entrance Code	**0**	
1.Interior	4.Vacant	7.
2.Refusal	5.Estimate	8.
3.Informed	6.	9.
Information Code	**0**	
1.Owner	4.Agent	7.
2.Relative	5.Estimate	8.
3.Tenant	6.Other	9.

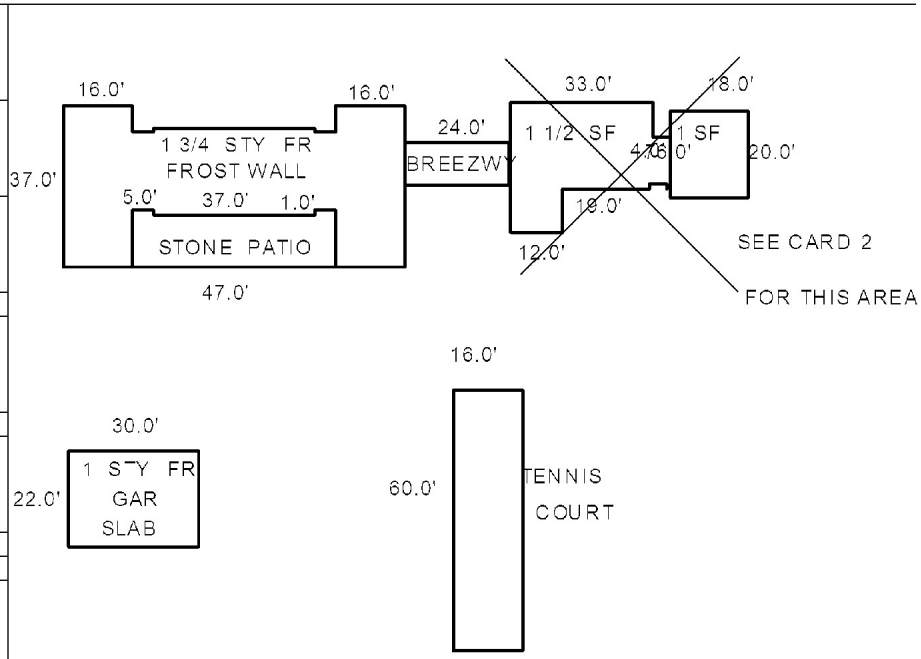

Date Inspected

Additions, Outbuildings & Improvements

Type	Year	Units	Grade	Cond	Phys.	Funct.	Sound Value
21 Open Frame	0	240	0 0	0	0 %	0 %	
4 1 & 1/2 Story Fr	0	824	0 0	0	0 %	0 %	
1 One Story Frame	0	160	0 0	0	0 %	0 %	
81 1 SF GARAGE	0	660	0 0	0	0 %	0 %	
64 Tennis Court	1991	7200	0 0	0	0 %	0 %	
62 Carport (Gable)	0	457	0 0	0	0 %	0 %	
					%	%	
					%	%	
					%	%	
					%	%	

1.One Story Fram
2.Two Story Fram
3.Three Story Fr
4.1 & 1/2 Story
5.1 & 3/4 Story
6.2 & 1/2 Story
21.Open Frame Por
22.Encl Frame Por
23.Frame Garage
24.Frame Shed
25.Frame Bay Wind
26.1SFr Overhang
27.Unfin Basement
28.Unfinished Att
29.Finished Attic

Map Lot 106-009 Account 1603 Location 43 TROWBRIDGE ROAD Card 2 Of 2 10/01/2020

KUNHARDT, PETER, SR. & SUZANNE
20 HOG HILL ROAD
CHAPPAQUA NY 10514

B860P576 B5961P97

Previous Owner
TROWBRIDGE WELLS CORP.
109 EAST 101ST STREET

NEW YORK NY 10029
Sale Date: 12/20/2012

Inspection Witnessed By:

X Date

No./Date	Description	Date Insp.

Notes:

Hancock 2020

Property Data

Neighborhood **11 Neighborhood 11**

Tree Growth Year **0**

TREE GROWTH RECERTIFY **0**

STATE SALE CODE **0**

Zone/Land Use **11 Residential**

Secondary Zone

Topography

1.Level	4.Below St	7.
2.Rolling	5.Low	8.
3.Above St	6.Swampy	9.

Utilities

1.Public	4.Dr Well	7.Cesspool
2.Water	5.Dug Well	8.
3.Sewer	6.Septic	9.None

Street **1 Paved**

1.Paved	4.Proposed	7.
2.Semi Imp	5.	8.
3.Gravel	6.	9.None

REVIEW STRUCTURE YEAR **0**

RENTAL? 0=NO 1=YES **0**

Sale Data

Sale Date **12/20/2012**

Price

Sale Type **2 Land & Buildings**

1.Land	4.Mobile	7.
2.L & B	5.Other	8.
3.Building	6.	9.

Financing **9 Unknown**

1.Convent	4.Seller	7.
2.FHA/VA	5.Private	8.
3.Assumed	6.Cash	9.Unknown

Validity **2 Related Parties**

1.Valid	4.Split	7.Changes
2.Related	5.Partial	8.Other
3.Distress	6.Exempt	9.Fr Ffclse

Verified **5 Public Record**

1.Buyer	4.Agent	7.Family
2.Seller	5.Pub Rec	8.Other
3.Lender	6.MLS	9.

Assessment Record

Year	Land	Buildings	Exempt	Total
2007	0	278,000	0	278,000
2008	0	278,000	0	278,000
2009	0	278,000	0	278,000
2010	0	278,000	0	278,000
2011	0	278,000	0	278,000
2012	0	278,000	0	278,000
2013	0	278,000	0	278,000
2014	0	216,500	0	216,500
2015	0	333,600	0	333,600
2018	0	444,800	0	444,800
2019	0	444,800	0	444,800
2020	0	444,800	0	444,800

Land Data

Front Foot	Type	Effective Frontage	Effective Depth	Influence Factor	Influence Code
11.Regular Lot				%	
12.Delta Triangle				%	
13.Nabla Triangle				%	
14.Rear Land				%	
15.Miscellaneous				%	
				%	
				%	
Square Foot		**Square Feet**			
16.Regular Lot				%	
17.Secondary Lot				%	
18.Excess Land				%	
19.Condominium				%	
20.Miscellaneous				%	
				%	
				%	
Fract. Acre		**Acreage/Sites**			
21.Homesite (Frac				%	
22.Baselot (Fract				%	
23.Misc (Fract)				%	
Acres				%	
24.Excess Acres 1				%	
25.Excess Acres 5				%	
26.Excess Acres 2				%	
27.Excess Acres 5				%	
28.Excess Acres 1				%	
29.Excess acres				%	

Total Acreage 0.00

Influence Codes

1.Unimproved
2.Excess Frtg
3.Topography
4.Size/Shape
5.Access
6.Restriction
7.Corner Infl
8.Environment
9.Fract Share
Acres
30.Industrial Sit
31.Working Waterf
32.Cultivated Cro
33.Pasture
34.Softwood (Farm
35.Mixed Wood (Fa
36.Hardwood (Farm
37.Softwood
38.Mixed Wood
39.Hardwood
40.Wasteland
41.Gravel Pit
42.Mobile Home Si
43.Location Base
44.Lot Improvemen
45.Waterfront A
46.Lobster Pound

Hancock 2020

Map Lot 106-009 | Account 1603 | Location 43 TROWBRIDGE ROAD | Card 2 Of 2 | 10/01/2020

Building Style	**1 Conventional**	
0.Uncoded	4.Cape	8.Log
1.Conv.	5.Garrison	9.Other
2.Ranch	6.Colonial	10.Dutch C
3.R Ranch	7.Contemp	11.Farmhou
Dwelling Units	**1**	
Other Units	**0**	
Stories	**5 One & 3/4 Story**	
1.1	4.1.5	7.3.5
2.2	5.1.75	8.
3.3	6.2.5	9.
Exterior Walls	**1 Wood Siding**	
0.Uncoded	4.Asbestos	8.Stone
1.Wood	5.Stucco	9.Other
2.Vin/Al	6.Brick Ve	10.Concret
3.Compos.	7.Solid Br	12.
Roof Surface	**1 Asphalt Shingles**	
1.Asphalt	4.Composit	7.
2.Slate	5.Wood	8.
3.Metal	6.Other	9.
SF Masonry Trim	**0**	
OPEN-3-CUSTOM	**0**	
OPEN-4-CUSTOM	**0**	
Year Built	**2015**	
Year Remodeled	**0**	
Foundation	**1 Concrete**	
1.Concrete	4.Wood	7.
2.C Block	5.Slab	8.
3.Br/Stone	6.Piers	9.
Basement	**4 Full Basement**	
1.1/4 Bmt	4.Full Bmt	7.
2.1/2 Bmt	5.None	8.
3.3/4 Bmt	6.	9.None
Bsmt Gar # Cars	**0**	
Wet Basement	**1 Dry Basement**	
1.Dry	4.	7.
2.Damp	5.	8.
3.Wet	6.	9.

SF Bsmt Living	**0**	
Fin Bsmt Grade	**0 0**	
OPEN-5-CUSTOMIZE	**0**	
Heat Type	**100%**	**1 Hot Water BB**
0.Uncoded	4.Steam	8.Fl/Wall
1.HWBB	5.FWA	9.No Heat
2.HWCI	6.GravWA	10.Radiabt
3.H Pump	7.Electric	12.
Cool Type	**100%**	**9 None**
1.Refrig	4.W&C Air	7.
2.Evapor	5.	8.
3.H Pump	6.	9.None
Kitchen Style	**2 Typical**	
1.Modern	4.Obsolete	7.
2.Typical	5.	8.
3.Old Type	6.	9.None
Bath(s) Style	**2 Typical Bath(s)**	
1.Modern	4.Obsolete	7.
2.Typical	5.	8.
3.Old Type	6.	9.None
# Rooms	**4**	
# Bedrooms	**1**	
# Full Baths	**1**	
# Half Baths	**1**	
# Addn Fixtures	**0**	
# Fireplaces	**1**	

TRIO Software
A Division of Harris Computer Systems

Layout	**1 Typical**	
1.Typical	4.	7.
2.Inadeq	5.	8.
3.Horrid	6.	9.
Attic	**9 None**	
1.1/4 Fin	4.Full Fin	7.
2.1/2 Fin	5.Fl/Stair	8.
3.3/4 Fin	6.	9.None
Insulation	**1 Full**	
1.Full	4.Minimal	7.
2.Heavy	5.Partial	8.
3.Capped	6.	9.None
Unfinished %	**0%**	
Grade & Factor	**6 Excellent 100%**	
1.E Grade	4.B Grade	7.AAA Grad
2.D Grade	5.A Grade	8.SC Grade
3.C Grade	6.AA Grade	9.Same
SQFT (Footprint)	**863**	
Condition	**4 Average**	
1.Poor	4.Avg	7.V G
2.Fair	5.Avg+	8.Exc
3.Avg-	6.Good	9.Same
Phys. % Good	**0%**	
Funct. % Good	**100%**	
Functional Code	**1 Incomplete**	
1.Incomp	4.Delap	7.Seasonal
2.O-Built	5.Bsmt	8.
3.Fire	6.2014 ADJ	9.None
Econ. % Good	**100%**	
Economic Code	**None**	
0.None	3.No Power	7.
1.Location	4.Generate	8.
2.Encroach	9.None	9.
Entrance Code	**0**	
1.Interior	4.Vacant	7.
2.Refusal	5.Estimate	8.
3.Informed	6.	9.
Information Code	**0**	
1.Owner	4.Agent	7.
2.Relative	5.Estimate	8.
3.Tenant	6.Other	9.

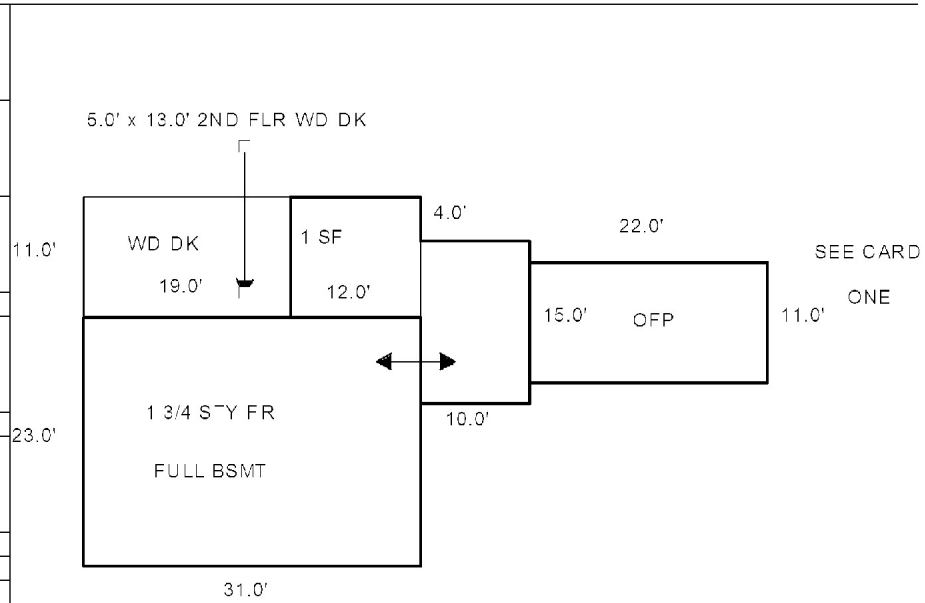

Date Inspected

Additions, Outbuildings & Improvements

Type	Year	Units	Grade	Cond	Phys.	Funct.	Sound Value
21 Open Frame	0	242	0 0	0	0 %	0 %	
1 One Story Frame	0	132	0 0	0	0 %	0 %	
68 Wood Deck	0	209	0 0	0	0 %	0 %	
68 Wood Deck	0	65	0 0	0	0 %	0 %	
					%	%	
					%	%	
					%	%	
					%	%	
					%	%	
					%	%	

1.One Story Fram
2.Two Story Fram
3.Three Story Fr
4.1 & 1/2 Story
5.1 & 3/4 Story
6.2 & 1/2 Story
21.Open Frame Por
22.Encl Frame Por
23.Frame Garage
24.Frame Shed
25.Frame Bay Wind
26.1SFr Overhang
27.Unfin Basement
28.Unfinished Att
29.Finished Attic

Map Lot 106-009-001 Account 2185 Location 43 TROWBRIDGE ROAD Card 1 Of 1 10/01/2020

TROWBRIDGE WELLS CORP.
c/o TROWBRIDGE, STEPHEN
109 EAST 101st STREET
NEW YORK CA 10029

B860P576 B1860P579

Property Data

Neighborhood **11 Neighborhood 11**

Tree Growth Year **0**

TREE GROWTH RECERTIFY **0**

STATE SALE CODE **0**

Zone/Land Use **11 Residential**

Secondary Zone

Topography **2 Rolling**

1.Level	4.Below St	7.
2.Rolling	5.Low	8.
3.Above St	6.Swampy	9.

Utilities **4 Drilled Well** **6 Septic System**

1.Public	4.Dr Well	7.Cesspool
2.Water	5.Dug Well	8.
3.Sewer	6.Septic	9.None

Street **2 Semi-Improved**

1.Paved	4.Proposed	7.
2.Semi Imp	5.	8.
3.Gravel	6.	9.None

REVIEW STRUCTURE YEAR **0**

RENTAL? 0=NO 1=YES **0**

Sale Data

Sale Date

Price

Sale Type

1.Land	4.Mobile	7.
2.L & B	5.Other	8.
3.Building	6.	9.

Financing

1.Convent	4.Seller	7.
2.FHA/VA	5.Private	8.
3.Assumed	6.Cash	9.Unknown

Validity

1.Valid	4.Split	7.Changes
2.Related	5.Partial	8.Other
3.Distress	6.Exempt	9.Fr Ffclse

Verified

1.Buyer	4.Agent	7.Family
2.Seller	5.Pub Rec	8.Other
3.Lender	6.MLS	9.

Assessment Record

Year	Land	Buildings	Exempt	Total
2013	350,500	171,800	0	522,300
2014	350,500	171,800	0	522,300
2015	350,500	171,800	0	522,300
2016	350,500	171,800	0	522,300
2017	350,500	171,800	0	522,300
2018	350,500	171,800	0	522,300
2019	350,500	171,800	0	522,300
2020	350,500	171,800	0	522,300

Land Data

Front Foot	Type	Effective Frontage	Effective Depth	Influence Factor	Influence Code
11.Regular Lot				%	
12.Delta Triangle				%	
13.Nabla Triangle				%	
14.Rear Land				%	
15.Miscellaneous				%	
				%	
				%	

Square Foot		Square Feet		
16.Regular Lot			%	
17.Secondary Lot			%	
18.Excess Land			%	
19.Condominium			%	
20.Miscellaneous			%	
			%	
			%	

Fract. Acre		Acreage/Sites		
21.Homesite (Frac	21	0.98	100 %	0
22.Baselot (Fract	43	1.00	100 %	0
23.Misc (Fract)	44	1.00	100 %	0
Acres	45	176.00	100 %	0
24.Excess Acres 1			%	
25.Excess Acres 5			%	
26.Excess Acres 2			%	
27.Excess Acres 5				
28.Excess Acres 1				
29.Excess acres				

Total Acreage 0.98

Influence Codes

1.Unimproved
2.Excess Frtg
3.Topography
4.Size/Shape
5.Access
6.Restriction
7.Corner Infl
8.Environment
9.Fract Share
Acres
30.Industrial Sit
31.Working Waterf
32.Cultivated Cro
33.Pasture
34.Softwood (Farm
35.Mixed Wood (Fa
36.Hardwood (Farm
37.Softwood
38.Mixed Wood
39.Hardwood
40.Wasteland
41.Gravel Pit
42.Mobile Home Si
43.Location Base
44.Lot Improvemen
45.Waterfront A
46.Lobster Pound

Inspection Witnessed By:

X Date

No./Date	Description	Date Insp.

Notes:

Hancock 2020

Hancock 2020

Map Lot 106-009-001 | Account 2185 | Location 43 TROWBRIDGE ROAD | Card 1 Of 1 | 10/01/2020

Building Style **7 Contemporary**		
0.Uncoded	4.Cape	8.Log
1.Conv.	5.Garrison	9.Other
2.Ranch	6.Colonial	10.Dutch C
3.R Ranch	7.Contemp	11.Farmhou
Dwelling Units **1**		
Other Units **0**		
Stories **5 One & 3/4 Story**		
1.1	4.1.5	7.3.5
2.2	5.1.75	8.
3.3	6.2.5	9.
Exterior Walls **1 Wood Siding**		
0.Uncoded	4.Asbestos	8.Stone
1.Wood	5.Stucco	9.Other
2.Vin/Al	6.Brick Ve	10.Concret
3.Compos.	7.Solid Br	12.
Roof Surface **1 Asphalt Shingles**		
1.Asphalt	4.Composit	7.
2.Slate	5.Wood	8.
3.Metal	6.Other	9.
SF Masonry Trim **0**		
OPEN-3-CUSTOM **0**		
OPEN-4-CUSTOM **0**		
Year Built **1968**		
Year Remodeled **0**		
Foundation **6 Piers**		
1.Concrete	4.Wood	7.
2.C Block	5.Slab	8.
3.Br/Stone	6.Piers	9.
Basement **9 No Basement**		
1.1/4 Bmt	4.Full Bmt	7.
2.1/2 Bmt	5.None	8.
3.3/4 Bmt	6.	9.None
Bsmt Gar # Cars **0**		
Wet Basement **9 No Basement**		
1.Dry	4.	7.
2.Damp	5.	8.
3.Wet	6.	9.

SF Bsmt Living **0**		
Fin Bsmt Grade **0 0**		
OPEN-5-CUSTOMIZE **0**		
Heat Type **100%** **9 Not Heated**		
0.Uncoded	4.Steam	8.Fl/Wall
1.HWBB	5.FWA	9.No Heat
2.HWCI	6.GravWA	10.Radiabt
3.H Pump	7.Electric	12.
Cool Type **100%** **9 None**		
1.Refrig	4.W&C Air	7.
2.Evapor	5.	8.
3.H Pump	6.	9.None
Kitchen Style **2 Typical**		
1.Modern	4.Obsolete	7.
2.Typical	5.	8.
3.Old Type	6.	9.None
Bath(s) Style **2 Typical Bath(s)**		
1.Modern	4.Obsolete	7.
2.Typical	5.	8.
3.Old Type	6.	9.None
# Rooms **9**		
# Bedrooms **4**		
# Full Baths **2**		
# Half Baths **1**		
# Addn Fixtures **0**		
# Fireplaces **1**		

TRIO Software
A Division of Harris Computer Systems

Layout **1 Typical**		
1.Typical	4.	7.
2.Inadeq	5.	8.
3.Horrid	6.	9.
Attic **9 None**		
1.1/4 Fin	4.Full Fin	7.
2.1/2 Fin	5.Fl/Stair	8.
3.3/4 Fin	6.	9.None
Insulation **9 None**		
1.Full	4.Minimal	7.
2.Heavy	5.Partial	8.
3.Capped	6.	9.None
Unfinished % **0%**		
Grade & Factor **4 Good 100%**		
1.E Grade	4.B Grade	7.AAA Grad
2.D Grade	5.A Grade	8.SC Grade
3.C Grade	6.AA Grade	9.Same
SQFT (Footprint) **800**		
Condition **5 Above Average**		
1.Poor	4.Avg	7.V G
2.Fair	5.Avg+	8.Exc
3.Avg-	6.Good	9.Same
Phys. % Good **0%**		
Funct. % Good **100%**		
Functional Code **9 None**		
1.Incomp	4.Delap	7.Seasonal
2.O-Built	5.Bsmt	8.
3.Fire	6.2014 ADJ	9.None
Econ. % Good **100%**		
Economic Code **None**		
0.None	3.No Power	7.
1.Location	4.Generate	8.
2.Encroach	9.None	9.
Entrance Code **0**		
1.Interior	4.Vacant	7.
2.Refusal	5.Estimate	8.
3.Informed	6.	9.
Information Code **0**		
1.Owner	4.Agent	7.
2.Relative	5.Estimate	8.
3.Tenant	6.Other	9.

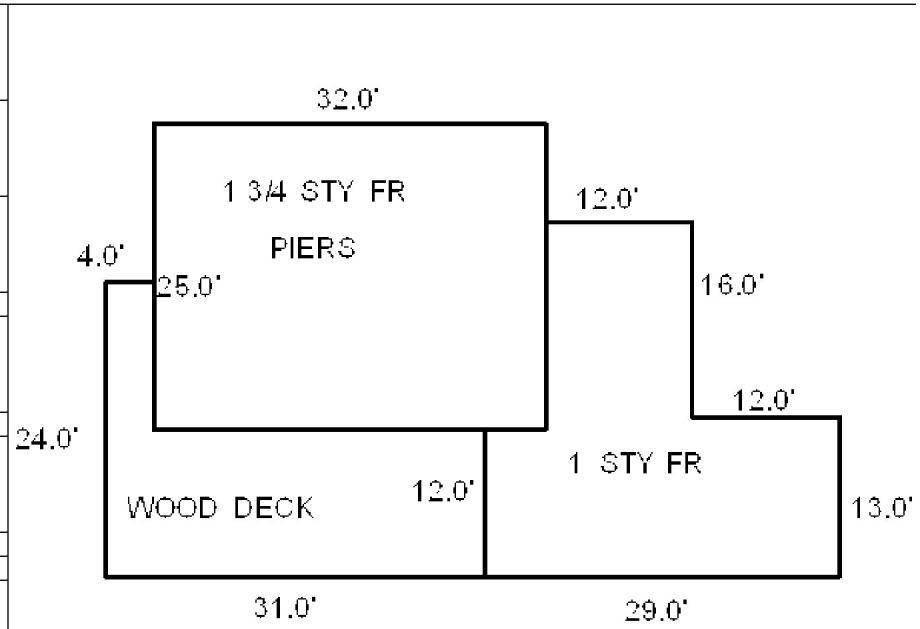

Date Inspected

Additions, Outbuildings & Improvements

Type	Year	Units	Grade	Cond	Phys.	Funct.	Sound Value
68 Wood Deck	0	420	0 0	0	0 %	0 %	
1 One Story Frame	0	568	0 0	0	0 %	0 %	
					%	%	
					%	%	
					%	%	
					%	%	
					%	%	
					%	%	
					%	%	
					%	%	

1.One Story Fram
2.Two Story Fram
3.Three Story Fr
4.1 & 1/2 Story
5.1 & 3/4 Story
6.2 & 1/2 Story
21.Open Frame Por
22.Encl Frame Por
23.Frame Garage
24.Frame Shed
25.Frame Bay Wind
26.1SFr Overhang
27.Unfin Basement
28.Unfinished Att
29.Finished Attic

Map Lot 106-010 Account 1147 Location POINT ROAD Card 1 Of 1 10/01/2020

LOUNDER-HASKINS, GERTRUDE
P O BOX 97
HANCOCK ME 04640

B1909P27

Inspection Witnessed By:

X Date

No./Date	Description	Date Insp.

Notes:

Hancock 2020

Property Data

Neighborhood **10 Neighborhood 10**

Tree Growth Year **0**

TREE GROWTH RECERTIFY **0**

STATE SALE CODE **0**

Zone/Land Use **11 Residential**

Secondary Zone

Topography

1.Level	4.Below St	7.
2.Rolling	5.Low	8.
3.Above St	6.Swampy	9.

Utilities

1.Public	4.Dr Well	7.Cesspool
2.Water	5.Dug Well	8.
3.Sewer	6.Septic	9.None

Street

1.Paved	4.Proposed	7.
2.Semi Imp	5.	8.
3.Gravel	6.	9.None

REVIEW STRUCTURE YEAR **0**

RENTAL? 0=NO 1=YES **0**

Sale Data

Sale Date

Price

Sale Type

1.Land	4.Mobile	7.
2.L & B	5.Other	8.
3.Building	6.	9.

Financing

1.Convent	4.Seller	7.
2.FHA/VA	5.Private	8.
3.Assumed	6.Cash	9.Unknown

Validity

1.Valid	4.Split	7.Changes
2.Related	5.Partial	8.Other
3.Distress	6.Exempt	9.Fr Ffclse

Verified

1.Buyer	4.Agent	7.Family
2.Seller	5.Pub Rec	8.Other
3.Lender	6.MLS	9.

Assessment Record

Year	Land	Buildings	Exempt	Total
2007	158,800	0	0	158,800
2008	176,300	0	0	176,300
2009	176,300	0	0	176,300
2010	176,300	0	0	176,300
2011	176,300	0	0	176,300
2012	176,300	0	0	176,300
2013	176,300	0	0	176,300
2014	176,300	0	0	176,300
2015	176,300	0	0	176,300
2016	176,300	0	0	176,300
2017	176,300	0	0	176,300
2018	176,300	0	0	176,300
2019	176,300	0	0	176,300
2020	176,300	0	0	176,300

Land Data

Front Foot	Type	Effective Frontage	Effective Depth	Influence Factor	Influence Code
11.Regular Lot				%	
12.Delta Triangle				%	
13.Nabla Triangle				%	
14.Rear Land				%	
15.Miscellaneous				%	
				%	
				%	
Square Foot		**Square Feet**			
16.Regular Lot				%	
17.Secondary Lot				%	
18.Excess Land				%	
19.Condominium				%	
20.Miscellaneous				%	
				%	
				%	
Fract. Acre		**Acreage/Sites**			
21.Homesite (Frac	21	1.00	100	%	0
22.Baselot (Fract	24	4.00	100	%	0
23.Misc (Fract)	25	19.00	100	%	0
Acres	40	5.90	100	%	0
24.Excess Acres 1	44	1.00	100	%	0
25.Excess Acres 5				%	
26.Excess Acres 2				%	
27.Excess Acres 5					
28.Excess Acres 1					
29.Excess acres					

Total Acreage 29.90

Influence Codes

1.Unimproved
2.Excess Frtg
3.Topography
4.Size/Shape
5.Access
6.Restriction
7.Corner Infl
8.Environment
9.Fract Share
Acres
30.Industrial Sit
31.Working Waterf
32.Cultivated Cro
33.Pasture
34.Softwood (Farm
35.Mixed Wood (Fa
36.Hardwood (Farm
37.Softwood
38.Mixed Wood
39.Hardwood
40.Wasteland
41.Gravel Pit
42.Mobile Home Si
43.Location Base
44.Lot Improvemen
45.Waterfront A
46.Lobster Pound

Hancock 2020

Map Lot 106-010 | Account 1147 | Location POINT ROAD | Card 1 Of 1 | 10/01/2020

Building Style		
0.Uncoded	4.Cape	8.Log
1.Conv.	5.Garrison	9.Other
2.Ranch	6.Colonial	10.Dutch C
3.R Ranch	7.Contemp	11.Farmhou

Dwelling Units
Other Units

Stories		
1.1	4.1.5	7.3.5
2.2	5.1.75	8.
3.3	6.2.5	9.

Exterior Walls		
0.Uncoded	4.Asbestos	8.Stone
1.Wood	5.Stucco	9.Other
2.Vin/Al	6.Brick Ve	10.Concret
3.Compos.	7.Solid Br	12.

Roof Surface		
1.Asphalt	4.Composit	7.
2.Slate	5.Wood	8.
3.Metal	6.Other	9.

SF Masonry Trim
OPEN-3-CUSTOM
OPEN-4-CUSTOM
Year Built
Year Remodeled

Foundation		
1.Concrete	4.Wood	7.
2.C Block	5.Slab	8.
3.Br/Stone	6.Piers	9.

Basement		
1.1/4 Bmt	4.Full Bmt	7.
2.1/2 Bmt	5.None	8.
3.3/4 Bmt	6.	9.None

Bsmt Gar # Cars

Wet Basement		
1.Dry	4.	7.
2.Damp	5.	8.
3.Wet	6.	9.

SF Bsmt Living
Fin Bsmt Grade
OPEN-5-CUSTOMIZE

Heat Type **100%**		
0.Uncoded	4.Steam	8.Fl/Wall
1.HWBB	5.FWA	9.No Heat
2.HWCI	6.GravWA	10.Radiabt
3.H Pump	7.Electric	12.

Cool Type **100%**		
1.Refrig	4.W&C Air	7.
2.Evapor	5.	8.
3.H Pump	6.	9.None

Kitchen Style		
1.Modern	4.Obsolete	7.
2.Typical	5.	8.
3.Old Type	6.	9.None

Bath(s) Style		
1.Modern	4.Obsolete	7.
2.Typical	5.	8.
3.Old Type	6.	9.None

Rooms
Bedrooms
Full Baths
Half Baths
Addn Fixtures
Fireplaces

TRIO Software
A Division of Harris Computer Systems

Layout		
1.Typical	4.	7.
2.Inadeq	5.	8.
3.Horrid	6.	9.

Attic		
1.1/4 Fin	4.Full Fin	7.
2.1/2 Fin	5.Fl/Stair	8.
3.3/4 Fin	6.	9.None

Insulation		
1.Full	4.Minimal	7.
2.Heavy	5.Partial	8.
3.Capped	6.	9.None

Unfinished %

Grade & Factor		
1.E Grade	4.B Grade	7.AAA Grad
2.D Grade	5.A Grade	8.SC Grade
3.C Grade	6.AA Grade	9.Same

SQFT (Footprint)

Condition		
1.Poor	4.Avg	7.V G
2.Fair	5.Avg+	8.Exc
3.Avg-	6.Good	9.Same

Phys. % Good
Funct. % Good

Functional Code		
1.Incomp	4.Delap	7.Seasonal
2.O-Built	5.Bsmt	8.
3.Fire	6.2014 ADJ	9.None

Econ. % Good

Economic Code		
0.None	3.No Power	7.
1.Location	4.Generate	8.
2.Encroach	9.None	9.

Entrance Code **0**		
1.Interior	4.Vacant	7.
2.Refusal	5.Estimate	8.
3.Informed	6.	9.

Information Code **0**		
1.Owner	4.Agent	7.
2.Relative	5.Estimate	8.
3.Tenant	6.Other	9.

Date Inspected

Additions, Outbuildings & Improvements

Type	Year	Units	Grade	Cond	Phys.	Funct.	Sound Value
					%	%	
					%	%	
					%	%	
					%	%	
					%	%	
					%	%	
					%	%	
					%	%	
					%	%	
					%	%	

1.One Story Fram
2.Two Story Fram
3.Three Story Fr
4.1 & 1/2 Story
5.1 & 3/4 Story
6.2 & 1/2 Story
21.Open Frame Por
22.Encl Frame Por
23.Frame Garage
24.Frame Shed
25.Frame Bay Wind
26.1SFr Overhang
27.Unfin Basement
28.Unfinished Att
29.Finished Attic

Map Lot 106-010-001 Account 2135 Location 758 POINT ROAD Card 1 Of 1 10/01/2020

LOUNDER JR., HARRY
LOUNDER, ANNABELLE R
758 POINT ROAD
HANCOCK ME 04640

B5527P70

Property Data

Neighborhood **10 Neighborhood 10**

Tree Growth Year **0**

TREE GROWTH RECERTIFY **0**

STATE SALE CODE **0**

Zone/Land Use **11 Residential**

Secondary Zone

Topography **1 Level**

1.Level	4.Below St	7.
2.Rolling	5.Low	8.
3.Above St	6.Swampy	9.

Utilities

1.Public	4.Dr Well	7.Cesspool
2.Water	5.Dug Well	8.
3.Sewer	6.Septic	9.None

Street **1 Paved**

1.Paved	4.Proposed	7.
2.Semi Imp	5.	8.
3.Gravel	6.	9.None

REVIEW STRUCTURE YEAR **0**

RENTAL? 0=NO 1=YES **0**

Sale Data

Sale Date

Price

Sale Type

1.Land	4.Mobile	7.
2.L & B	5.Other	8.
3.Building	6.	9.

Financing

1.Convent	4.Seller	7.
2.FHA/VA	5.Private	8.
3.Assumed	6.Cash	9.Unknown

Validity

1.Valid	4.Split	7.Changes
2.Related	5.Partial	8.Other
3.Distress	6.Exempt	9.Fr Ffclse

Verified

1.Buyer	4.Agent	7.Family
2.Seller	5.Pub Rec	8.Other
3.Lender	6.MLS	9.

Assessment Record

Year	Land	Buildings	Exempt	Total
2011	75,200	54,700	0	129,900
2012	75,200	52,100	10,000	117,300
2013	75,200	49,400	10,000	114,600
2014	75,200	48,400	10,800	112,800
2015	75,200	48,400	11,000	112,600
2016	75,200	48,400	16,500	107,100
2017	75,200	48,300	22,000	101,500
2018	75,200	48,300	22,000	101,500
2019	75,200	48,300	22,000	101,500
2020	75,200	48,300	25,000	98,500

Land Data

Front Foot	Type	Effective Frontage	Effective Depth	Influence Factor	Influence Code
11.Regular Lot				%	
12.Delta Triangle				%	
13.Nabla Triangle				%	
14.Rear Land				%	
15.Miscellaneous				%	
				%	
				%	
Square Foot		**Square Feet**			
16.Regular Lot				%	
17.Secondary Lot				%	
18.Excess Land				%	
19.Condominium				%	
20.Miscellaneous				%	
				%	
				%	
Fract. Acre		**Acreage/Sites**			
21.Homesite (Frac	21	1.00	100	%	0
22.Baselot (Fract	24	0.10	100	%	0
23.Misc (Fract)	44	1.00	100	%	0
Acres				%	
24.Excess Acres 1				%	
25.Excess Acres 5				%	
26.Excess Acres 2				%	
27.Excess Acres 5				%	
28.Excess Acres 1				%	
29.Excess acres				%	

Total Acreage 1.10

Influence Codes

1.Unimproved
2.Excess Frtg
3.Topography
4.Size/Shape
5.Access
6.Restriction
7.Corner Infl
8.Environment
9.Fract Share
Acres
30.Industrial Sit
31.Working Waterf
32.Cultivated Cro
33.Pasture
34.Softwood (Farm
35.Mixed Wood (Fa
36.Hardwood (Farm
37.Softwood
38.Mixed Wood
39.Hardwood
40.Wasteland
41.Gravel Pit
42.Mobile Home Si
43.Location Base
44.Lot Improvemen
45.Waterfront A
46.Lobster Pound

Inspection Witnessed By:

X Date

No./Date	Description	Date Insp.

Notes:

Hancock 2020

Hancock 2020

Map Lot 106-010-001 | Account 2135 | Location 758 POINT ROAD | Card 1 Of 1 | 10/01/2020

Building Style		
0.Uncoded	4.Cape	8.Log
1.Conv.	5.Garrison	9.Other
2.Ranch	6.Colonial	10.Dutch C
3.R Ranch	7.Contemp	11.Farmhou

Dwelling Units

Other Units

Stories		
1.1	4.1.5	7.3.5
2.2	5.1.75	8.
3.3	6.2.5	9.

Exterior Walls		
0.Uncoded	4.Asbestos	8.Stone
1.Wood	5.Stucco	9.Other
2.Vin/Al	6.Brick Ve	10.Concret
3.Compos.	7.Solid Br	12.

Roof Surface		
1.Asphalt	4.Composit	7.
2.Slate	5.Wood	8.
3.Metal	6.Other	9.

SF Masonry Trim

OPEN-3-CUSTOM

OPEN-4-CUSTOM

Year Built

Year Remodeled

Foundation		
1.Concrete	4.Wood	7.
2.C Block	5.Slab	8.
3.Br/Stone	6.Piers	9.

Basement		
1.1/4 Bmt	4.Full Bmt	7.
2.1/2 Bmt	5.None	8.
3.3/4 Bmt	6.	9.None

Bsmt Gar # Cars

Wet Basement		
1.Dry	4.	7.
2.Damp	5.	8.
3.Wet	6.	9.

SF Bsmt Living

Fin Bsmt Grade

OPEN-5-CUSTOMIZE

Heat Type **100%**		
0.Uncoded	4.Steam	8.Fl/Wall
1.HWBB	5.FWA	9.No Heat
2.HWCI	6.GravWA	10.Radiabt
3.H Pump	7.Electric	12.

Cool Type **100%**		
1.Refrig	4.W&C Air	7.
2.Evapor	5.	8.
3.H Pump	6.	9.None

Kitchen Style		
1.Modern	4.Obsolete	7.
2.Typical	5.	8.
3.Old Type	6.	9.None

Bath(s) Style		
1.Modern	4.Obsolete	7.
2.Typical	5.	8.
3.Old Type	6.	9.None

Rooms

Bedrooms

Full Baths

Half Baths

Addn Fixtures

Fireplaces

TRIO Software
A Division of Harris Computer Systems

Layout		
1.Typical	4.	7.
2.Inadeq	5.	8.
3.Horrid	6.	9.

Attic		
1.1/4 Fin	4.Full Fin	7.
2.1/2 Fin	5.Fl/Stair	8.
3.3/4 Fin	6.	9.None

Insulation		
1.Full	4.Minimal	7.
2.Heavy	5.Partial	8.
3.Capped	6.	9.None

Unfinished %

Grade & Factor		
1.E Grade	4.B Grade	7.AAA Grad
2.D Grade	5.A Grade	8.SC Grade
3.C Grade	6.AA Grade	9.Same

SQFT (Footprint)

Condition		
1.Poor	4.Avg	7.V G
2.Fair	5.Avg+	8.Exc
3.Avg-	6.Good	9.Same

Phys. % Good

Funct. % Good

Functional Code		
1.Incomp	4.Delap	7.Seasonal
2.O-Built	5.Bsmt	8.
3.Fire	6.2014 ADJ	9.None

Econ. % Good

Economic Code		
0.None	3.No Power	7.
1.Location	4.Generate	8.
2.Encroach	9.None	9.

Entrance Code **0**		
1.Interior	4.Vacant	7.
2.Refusal	5.Estimate	8.
3.Informed	6.	9.

Information Code **0**		
1.Owner	4.Agent	7.
2.Relative	5.Estimate	8.
3.Tenant	6.Other	9.

Date Inspected

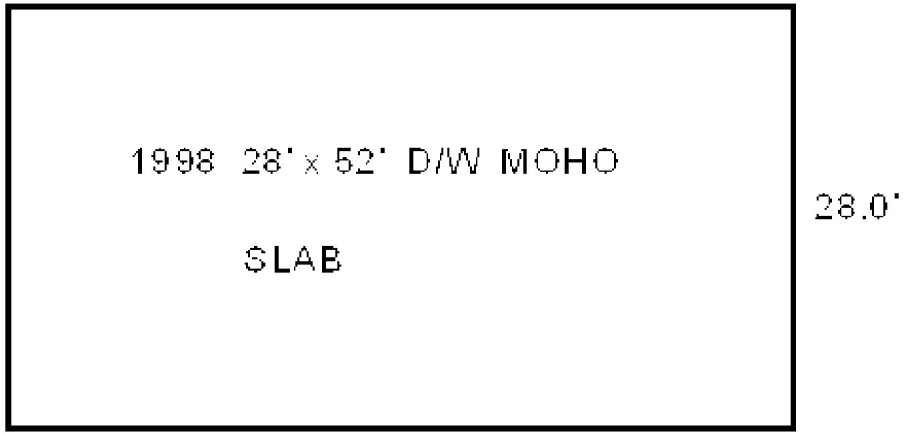

Additions, Outbuildings & Improvements

Type	Year	Units	Grade	Cond	Phys.	Funct.	Sound Value
997 12 Mobile Home	1998	28x52	3 100	4	0 %	100 %	
60 Concrete Slab	1998	1456	3 100	4	0 %	100 %	
					%	%	
					%	%	
					%	%	
					%	%	
					%	%	
					%	%	
					%	%	
					%	%	

1.One Story Fram
2.Two Story Fram
3.Three Story Fr
4.1 & 1/2 Story
5.1 & 3/4 Story
6.2 & 1/2 Story
21.Open Frame Por
22.Encl Frame Por
23.Frame Garage
24.Frame Shed
25.Frame Bay Wind
26.1SFr Overhang
27.Unfin Basement
28.Unfinished Att
29.Finished Attic

Map Lot 106-011 Account 752 Location 760 POINT ROAD Card 1 Of 1 10/01/2020

LOUNDER, HARRY K III
LOUNDER, SARAH A
760 POINT ROAD
HANCOCK ME 04640

B1155P524 B5508P26

Property Data

Neighborhood **10 Neighborhood 10**

Tree Growth Year **0**

TREE GROWTH RECERTIFY **0**

STATE SALE CODE **0**

Zone/Land Use **11 Residential**

Secondary Zone

Topography **9** **9**

1.Level 4.Below St 7.
2.Rolling 5.Low 8.
3.Above St 6.Swampy 9.

Utilities **9 None** **9 None**

1.Public 4.Dr Well 7.Cesspool
2.Water 5.Dug Well 8.
3.Sewer 6.Septic 9.None

Street **9 None**

1.Paved 4.Proposed 7.
2.Semi Imp 5. 8.
3.Gravel 6. 9.None

REVIEW STRUCTURE YEAR **0**

RENTAL? 0=NO 1=YES **0**

Sale Data

Sale Date

Price

Sale Type

1.Land 4.Mobile 7.
2.L & B 5.Other 8.
3.Building 6. 9.

Financing

1.Convent 4.Seller 7.
2.FHA/VA 5.Private 8.
3.Assumed 6.Cash 9.Unknown

Validity

1.Valid 4.Split 7.Changes
2.Related 5.Partial 8.Other
3.Distress 6.Exempt 9.Fr Ffclse

Verified

1.Buyer 4.Agent 7.Family
2.Seller 5.Pub Rec 8.Other
3.Lender 6.MLS 9.

Assessment Record

Year	Land	Buildings	Exempt	Total
2007	47,900	0	0	47,900
2008	47,900	0	0	47,900
2009	47,900	0	0	47,900
2010	47,900	0	0	47,900
2011	47,900	0	0	47,900
2012	47,900	60,600	0	108,500
2013	47,900	57,900	10,000	95,800
2014	47,900	56,400	10,800	93,500
2015	47,900	56,400	11,000	93,300
2016	47,900	56,400	16,500	87,800
2017	47,900	56,400	22,000	82,300
2018	47,900	56,400	22,000	82,300
2019	47,900	56,400	22,000	82,300
2020	47,900	56,400	25,000	79,300

Land Data

Front Foot	Type	Effective Frontage	Effective Depth	Influence Factor	Influence Code
11.Regular Lot				%	
12.Delta Triangle				%	
13.Nabla Triangle				%	
14.Rear Land				%	
15.Miscellaneous				%	
				%	
				%	
Square Foot		**Square Feet**			
16.Regular Lot				%	
17.Secondary Lot				%	
18.Excess Land				%	
19.Condominium				%	
20.Miscellaneous				%	
				%	
				%	
Fract. Acre		**Acreage/Sites**			
21.Homesite (Frac	21	0.50		100 %	0
22.Baselot (Fract	44	1.00		50 %	0
23.Misc (Fract)				%	
Acres				%	
24.Excess Acres 1				%	
25.Excess Acres 5				%	
26.Excess Acres 2				%	
27.Excess Acres 5				%	
28.Excess Acres 1				%	
29.Excess acres				%	

Total Acreage 0.50

Influence Codes

1.Unimproved
2.Excess Frtg
3.Topography
4.Size/Shape
5.Access
6.Restriction
7.Corner Infl
8.Environment
9.Fract Share
Acres
30.Industrial Sit
31.Working Waterf
32.Cultivated Cro
33.Pasture
34.Softwood (Farm
35.Mixed Wood (Fa
36.Hardwood (Farm
37.Softwood
38.Mixed Wood
39.Hardwood
40.Wasteland
41.Gravel Pit
42.Mobile Home Si
43.Location Base
44.Lot Improvemen
45.Waterfront A
46.Lobster Pound

Inspection Witnessed By:

X Date

No./Date	Description	Date Insp.

Notes:

Hancock 2020

Hancock 2020

Map Lot 106-011 | Account 752 | Location 760 POINT ROAD | Card 1 Of 1 | 10/01/2020

Building Style		
0.Uncoded	4.Cape	8.Log
1.Conv.	5.Garrison	9.Other
2.Ranch	6.Colonial	10.Dutch C
3.R Ranch	7.Contemp	11.Farmhou

Dwelling Units
Other Units

Stories		
1.1	4.1.5	7.3.5
2.2	5.1.75	8.
3.3	6.2.5	9.

Exterior Walls		
0.Uncoded	4.Asbestos	8.Stone
1.Wood	5.Stucco	9.Other
2.Vin/Al	6.Brick Ve	10.Concret
3.Compos.	7.Solid Br	12.

Roof Surface		
1.Asphalt	4.Composit	7.
2.Slate	5.Wood	8.
3.Metal	6.Other	9.

SF Masonry Trim
OPEN-3-CUSTOM
OPEN-4-CUSTOM
Year Built
Year Remodeled

Foundation		
1.Concrete	4.Wood	7.
2.C Block	5.Slab	8.
3.Br/Stone	6.Piers	9.

Basement		
1.1/4 Bmt	4.Full Bmt	7.
2.1/2 Bmt	5.None	8.
3.3/4 Bmt	6.	9.None

Bsmt Gar # Cars

Wet Basement		
1.Dry	4.	7.
2.Damp	5.	8.
3.Wet	6.	9.

SF Bsmt Living
Fin Bsmt Grade
OPEN-5-CUSTOMIZE

Heat Type **100%**		
0.Uncoded	4.Steam	8.Fl/Wall
1.HWBB	5.FWA	9.No Heat
2.HWCI	6.GravWA	10.Radiabt
3.H Pump	7.Electric	12.

Cool Type **100%**		
1.Refrig	4.W&C Air	7.
2.Evapor	5.	8.
3.H Pump	6.	9.None

Kitchen Style		
1.Modern	4.Obsolete	7.
2.Typical	5.	8.
3.Old Type	6.	9.None

Bath(s) Style		
1.Modern	4.Obsolete	7.
2.Typical	5.	8.
3.Old Type	6.	9.None

Rooms
Bedrooms
Full Baths
Half Baths
Addn Fixtures
Fireplaces

TRIO Software
A Division of Harris Computer Systems

Layout		
1.Typical	4.	7.
2.Inadeq	5.	8.
3.Horrid	6.	9.

Attic		
1.1/4 Fin	4.Full Fin	7.
2.1/2 Fin	5.Fl/Stair	8.
3.3/4 Fin	6.	9.None

Insulation		
1.Full	4.Minimal	7.
2.Heavy	5.Partial	8.
3.Capped	6.	9.None

Unfinished %
Grade & Factor

1.E Grade	4.B Grade	7.AAA Grad
2.D Grade	5.A Grade	8.SC Grade
3.C Grade	6.AA Grade	9.Same

SQFT (Footprint)

Condition		
1.Poor	4.Avg	7.V G
2.Fair	5.Avg+	8.Exc
3.Avg-	6.Good	9.Same

Phys. % Good
Funct. % Good

Functional Code		
1.Incomp	4.Delap	7.Seasonal
2.O-Built	5.Bsmt	8.
3.Fire	6.2014 ADJ	9.None

Econ. % Good

Economic Code		
0.None	3.No Power	7.
1.Location	4.Generate	8.
2.Encroach	9.None	9.

Entrance Code **0**		
1.Interior	4.Vacant	7.
2.Refusal	5.Estimate	8.
3.Informed	6.	9.

Information Code **0**		
1.Owner	4.Agent	7.
2.Relative	5.Estimate	8.
3.Tenant	6.Other	9.

Date Inspected

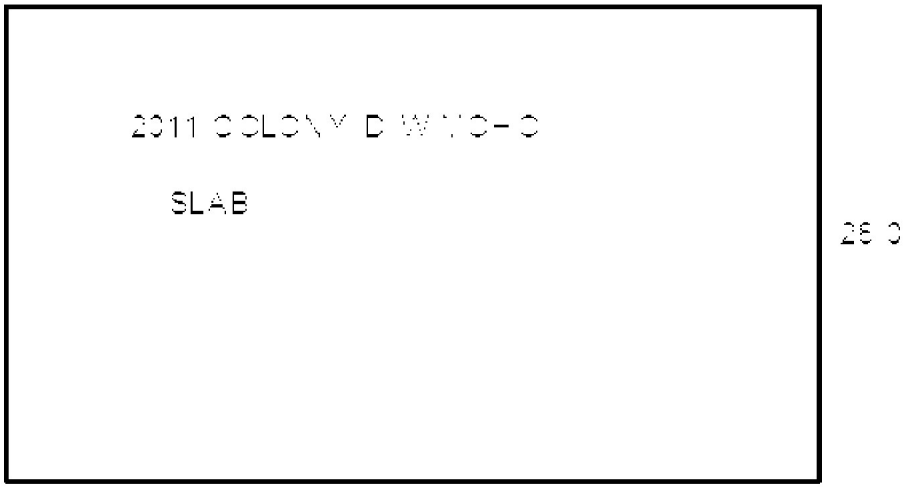

Additions, Outbuildings & Improvements

Type	Year	Units	Grade	Cond	Phys.	Funct.	Sound Value
994 Double Wide	2011	28x48	3 100	4	0 %	100 %	
60 Concrete Slab	2011	1344	3 100	4	0 %	100 %	
					%	%	
					%	%	
					%	%	
					%	%	
					%	%	
					%	%	
					%	%	
					%	%	

1.One Story Fram
2.Two Story Fram
3.Three Story Fr
4.1 & 1/2 Story
5.1 & 3/4 Story
6.2 & 1/2 Story
21.Open Frame Por
22.Encl Frame Por
23.Frame Garage
24.Frame Shed
25.Frame Bay Wind
26.1SFr Overhang
27.Unfin Basement
28.Unfinished Att
29.Finished Attic

Map Lot 106-012 Account 750 Location 782 POINT ROAD Card 1 Of 1 10/01/2020

LOUNDER, GERTRUDE, EDITH
LOUNDER, PAM
782 POINT ROAD
HANCOCK ME 04640

B1371P330

Property Data

Neighborhood **10 Neighborhood 10**

Tree Growth Year **0**

TREE GROWTH RECERTIFY **0**

STATE SALE CODE **0**

Zone/Land Use **11 Residential**

Secondary Zone

Topography **9** **9**

1.Level 4.Below St 7.
2.Rolling 5.Low 8.
3.Above St 6.Swampy 9.

Utilities **9 None** **9 None**

1.Public 4.Dr Well 7.Cesspool
2.Water 5.Dug Well 8.
3.Sewer 6.Septic 9.None

Street **1 Paved**

1.Paved 4.Proposed 7.
2.Semi Imp 5. 8.
3.Gravel 6. 9.None

REVIEW STRUCTURE YEAR **0**

RENTAL? 0=NO 1=YES **0**

Sale Data

Sale Date

Price

Sale Type

1.Land 4.Mobile 7.
2.L & B 5.Other 8.
3.Building 6. 9.

Financing

1.Convent 4.Seller 7.
2.FHA/VA 5.Private 8.
3.Assumed 6.Cash 9.Unknown

Validity

1.Valid 4.Split 7.Changes
2.Related 5.Partial 8.Other
3.Distress 6.Exempt 9.Fr Ffclse

Verified

1.Buyer 4.Agent 7.Family
2.Seller 5.Pub Rec 8.Other
3.Lender 6.MLS 9.

Assessment Record

Year	Land	Buildings	Exempt	Total
2007	85,600	78,400	13,000	151,000
2008	96,100	78,400	13,000	161,500
2009	96,100	73,600	13,000	156,700
2010	96,100	73,600	10,000	159,700
2011	96,100	73,600	10,000	159,700
2012	96,100	73,600	10,000	159,700
2013	96,100	73,600	10,000	159,700
2014	96,100	70,300	10,800	155,600
2015	96,100	70,300	11,000	155,400
2016	96,100	70,300	16,500	149,900
2017	96,100	70,300	22,000	144,400
2018	96,100	70,300	22,000	144,400
2019	96,100	70,300	22,000	144,400
2020	96,100	70,300	25,000	141,400

Land Data

Front Foot	Type	Effective Frontage	Effective Depth	Influence Factor	Influence Code
11.Regular Lot				%	
12.Delta Triangle				%	
13.Nabla Triangle				%	
14.Rear Land				%	
15.Miscellaneous				%	
				%	
				%	
Square Foot		**Square Feet**			
16.Regular Lot				%	
17.Secondary Lot				%	
18.Excess Land				%	
19.Condominium				%	
20.Miscellaneous				%	
				%	
				%	
Fract. Acre		**Acreage/Sites**			
21.Homesite (Frac	21	1.00	100	%	0
22.Baselot (Fract	24	4.00	100	%	0
23.Misc (Fract)	40	2.10	100	%	0
Acres	44	1.00	100	%	0
24.Excess Acres 1	25	3.00	100	%	0
25.Excess Acres 5				%	
26.Excess Acres 2				%	
27.Excess Acres 5					
28.Excess Acres 1					
29.Excess acres					

Total Acreage 10.10

Influence Codes

1.Unimproved
2.Excess Frtg
3.Topography
4.Size/Shape
5.Access
6.Restriction
7.Corner Infl
8.Environment
9.Fract Share
Acres
30.Industrial Sit
31.Working Waterf
32.Cultivated Cro
33.Pasture
34.Softwood (Farm
35.Mixed Wood (Fa
36.Hardwood (Farm
37.Softwood
38.Mixed Wood
39.Hardwood
40.Wasteland
41.Gravel Pit
42.Mobile Home Si
43.Location Base
44.Lot Improvemen
45.Waterfront A
46.Lobster Pound

Inspection Witnessed By:

X Date

No./Date	Description	Date Insp.

Notes:

Hancock 2020

Hancock 2020

Map Lot 106-012 | Account 750 | Location 782 POINT ROAD | Card 1 Of 1 | 10/01/2020

Building Style	**1 Conventional**	
0.Uncoded	4.Cape	8.Log
1.Conv.	5.Garrison	9.Other
2.Ranch	6.Colonial	10.Dutch C
3.R Ranch	7.Contemp	11.Farmhou
Dwelling Units	**1**	
Other Units	**0**	
Stories	**4 One & 1/2 Story**	
1.1	4.1.5	7.3.5
2.2	5.1.75	8.
3.3	6.2.5	9.
Exterior Walls	**1 Wood Siding**	
0.Uncoded	4.Asbestos	8.Stone
1.Wood	5.Stucco	9.Other
2.Vin/Al	6.Brick Ve	10.Concret
3.Compos.	7.Solid Br	12.
Roof Surface	**1 Asphalt Shingles**	
1.Asphalt	4.Composit	7.
2.Slate	5.Wood	8.
3.Metal	6.Other	9.
SF Masonry Trim	**0**	
OPEN-3-CUSTOM	**0**	
OPEN-4-CUSTOM	**0**	
Year Built	**1860**	
Year Remodeled	**0**	
Foundation	**3 Brick &/or Stone**	
1.Concrete	4.Wood	7.
2.C Block	5.Slab	8.
3.Br/Stone	6.Piers	9.
Basement	**4 Full Basement**	
1.1/4 Bmt	4.Full Bmt	7.
2.1/2 Bmt	5.None	8.
3.3/4 Bmt	6.	9.None
Bsmt Gar # Cars	**0**	
Wet Basement	**2 Damp Basement**	
1.Dry	4.	7.
2.Damp	5.	8.
3.Wet	6.	9.

SF Bsmt Living	**0**	
Fin Bsmt Grade	**0 0**	
OPEN-5-CUSTOMIZE	**0**	
Heat Type	**100%**	**1 Hot Water BB**
0.Uncoded	4.Steam	8.Fl/Wall
1.HWBB	5.FWA	9.No Heat
2.HWCI	6.GravWA	10.Radiabt
3.H Pump	7.Electric	12.
Cool Type	**100%**	**9 None**
1.Refrig	4.W&C Air	7.
2.Evapor	5.	8.
3.H Pump	6.	9.None
Kitchen Style	**2 Typical**	
1.Modern	4.Obsolete	7.
2.Typical	5.	8.
3.Old Type	6.	9.None
Bath(s) Style	**2 Typical Bath(s)**	
1.Modern	4.Obsolete	7.
2.Typical	5.	8.
3.Old Type	6.	9.None
# Rooms	**7**	
# Bedrooms	**3**	
# Full Baths	**1**	
# Half Baths	**0**	
# Addn Fixtures	**0**	
# Fireplaces	**0**	

TRIO Software
A Division of Harris Computer Systems

Layout	**1 Typical**	
1.Typical	4.	7.
2.Inadeq	5.	8.
3.Horrid	6.	9.
Attic	**9 None**	
1.1/4 Fin	4.Full Fin	7.
2.1/2 Fin	5.Fl/Stair	8.
3.3/4 Fin	6.	9.None
Insulation	**9 None**	
1.Full	4.Minimal	7.
2.Heavy	5.Partial	8.
3.Capped	6.	9.None
Unfinished %	**0%**	
Grade & Factor	**3 Average 100%**	
1.E Grade	4.B Grade	7.AAA Grad
2.D Grade	5.A Grade	8.SC Grade
3.C Grade	6.AA Grade	9.Same
SQFT (Footprint)	**544**	
Condition	**4 Average**	
1.Poor	4.Avg	7.V G
2.Fair	5.Avg+	8.Exc
3.Avg-	6.Good	9.Same
Phys. % Good	**0%**	
Funct. % Good	**95%**	
Functional Code	**6 2014 ADJUSTMENT**	
1.Incomp	4.Delap	7.Seasonal
2.O-Built	5.Bsmt	8.
3.Fire	6.2014 ADJ	9.None
Econ. % Good	**100%**	
Economic Code	**None**	
0.None	3.No Power	7.
1.Location	4.Generate	8.
2.Encroach	9.None	9.
Entrance Code	**0**	
1.Interior	4.Vacant	7.
2.Refusal	5.Estimate	8.
3.Informed	6.	9.
Information Code	**0**	
1.Owner	4.Agent	7.
2.Relative	5.Estimate	8.
3.Tenant	6.Other	9.

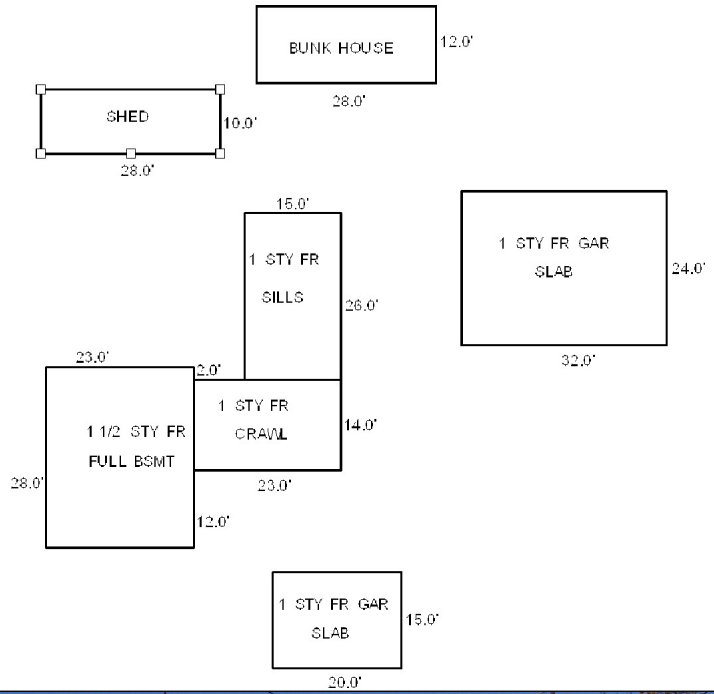

Date Inspected

Additions, Outbuildings & Improvements

Type	Year	Units	Grade	Cond	Phys.	Funct.	Sound Value
1 One Story Frame	0	272	0 0	0	0 %	0 %	
1 One Story Frame	0	390	2 100	4	0 %	100 %	
81 1 SF GARAGE	0	300	0 0	0	0 %	0 %	
81 1 SF GARAGE	1991	768	0 0	0	0 %	0 %	
24 Frame Shed	1980	280	2 100	3	0 %	100 %	
					%	%	
					%	%	
					%	%	
					%	%	
					%	%	

1.One Story Fram
2.Two Story Fram
3.Three Story Fr
4.1 & 1/2 Story
5.1 & 3/4 Story
6.2 & 1/2 Story
21.Open Frame Por
22.Encl Frame Por
23.Frame Garage
24.Frame Shed
25.Frame Bay Wind
26.1SFr Overhang
27.Unfin Basement
28.Unfinished Att
29.Finished Attic

Map Lot 106-013 Account 751 Location POINT ROAD/EASTSIDE ROAD Card 1 Of 1 10/01/2020

LOUNDER, GERTRUDE, EDITH & PAM
782 POINT ROAD
HANCOCK ME 04640

B1371P330

Property Data

Neighborhood **11 Neighborhood 11**

Tree Growth Year **0**

TREE GROWTH RECERTIFY **0**

STATE SALE CODE **0**

Zone/Land Use **11 Residential**

Secondary Zone

Topography **9** **9**

1.Level	4.Below St	7.
2.Rolling	5.Low	8.
3.Above St	6.Swampy	9.

Utilities **9 None** **9 None**

1.Public	4.Dr Well	7.Cesspool
2.Water	5.Dug Well	8.
3.Sewer	6.Septic	9.None

Street **9 None**

1.Paved	4.Proposed	7.
2.Semi Imp	5.	8.
3.Gravel	6.	9.None

REVIEW STRUCTURE YEAR **0**

RENTAL? 0=NO 1=YES **0**

Sale Data

Sale Date

Price

Sale Type

1.Land	4.Mobile	7.
2.L & B	5.Other	8.
3.Building	6.	9.

Financing

1.Convent	4.Seller	7.
2.FHA/VA	5.Private	8.
3.Assumed	6.Cash	9.Unknown

Validity

1.Valid	4.Split	7.Changes
2.Related	5.Partial	8.Other
3.Distress	6.Exempt	9.Fr Ffclse

Verified

1.Buyer	4.Agent	7.Family
2.Seller	5.Pub Rec	8.Other
3.Lender	6.MLS	9.

Assessment Record

Year	Land	Buildings	Exempt	Total
2007	54,500	0	0	54,500
2008	54,500	0	0	54,500
2009	54,500	0	0	54,500
2010	54,500	0	0	54,500
2011	54,500	0	0	54,500
2012	54,500	0	0	54,500
2013	54,500	0	0	54,500
2014	54,500	0	0	54,500
2015	54,500	0	0	54,500
2016	54,500	0	0	54,500
2017	54,500	0	0	54,500
2018	54,500	0	0	54,500
2019	54,500	0	0	54,500
2020	54,500	0	0	54,500

Land Data

Front Foot	Type	Effective Frontage	Effective Depth	Influence Factor	Influence Code
11.Regular Lot				%	
12.Delta Triangle				%	
13.Nabla Triangle				%	
14.Rear Land				%	
15.Miscellaneous				%	
				%	
				%	
Square Foot		**Square Feet**			
16.Regular Lot				%	
17.Secondary Lot				%	
18.Excess Land				%	
19.Condominium				%	
20.Miscellaneous				%	
				%	
				%	
Fract. Acre		**Acreage/Sites**			
21.Homesite (Frac	21	1.00		100 %	0
22.Baselot (Fract	24	3.00		100 %	0
23.Misc (Fract)				%	
Acres				%	
24.Excess Acres 1				%	
25.Excess Acres 5				%	
26.Excess Acres 2				%	
27.Excess Acres 5				%	
28.Excess Acres 1				%	
29.Excess acres				%	

Total Acreage 4.00

Influence Codes

1.Unimproved
2.Excess Frtg
3.Topography
4.Size/Shape
5.Access
6.Restriction
7.Corner Infl
8.Environment
9.Fract Share
Acres
30.Industrial Sit
31.Working Waterf
32.Cultivated Cro
33.Pasture
34.Softwood (Farm
35.Mixed Wood (Fa
36.Hardwood (Farm
37.Softwood
38.Mixed Wood
39.Hardwood
40.Wasteland
41.Gravel Pit
42.Mobile Home Si
43.Location Base
44.Lot Improvemen
45.Waterfront A
46.Lobster Pound

Inspection Witnessed By:

X Date

No./Date	Description	Date Insp.

Notes:

Hancock 2020

Hancock 2020

Map Lot 106-013 | Account 751 | Location POINT ROAD/EASTSIDE ROAD | Card 1 Of 1 | 10/01/2020

Building Style		
0.Uncoded	4.Cape	8.Log
1.Conv.	5.Garrison	9.Other
2.Ranch	6.Colonial	10.Dutch C
3.R Ranch	7.Contemp	11.Farmhou

Dwelling Units
Other Units

Stories		
1.1	4.1.5	7.3.5
2.2	5.1.75	8.
3.3	6.2.5	9.

Exterior Walls		
0.Uncoded	4.Asbestos	8.Stone
1.Wood	5.Stucco	9.Other
2.Vin/Al	6.Brick Ve	10.Concret
3.Compos.	7.Solid Br	12.

Roof Surface		
1.Asphalt	4.Composit	7.
2.Slate	5.Wood	8.
3.Metal	6.Other	9.

SF Masonry Trim
OPEN-3-CUSTOM
OPEN-4-CUSTOM
Year Built
Year Remodeled

Foundation		
1.Concrete	4.Wood	7.
2.C Block	5.Slab	8.
3.Br/Stone	6.Piers	9.

Basement		
1.1/4 Bmt	4.Full Bmt	7.
2.1/2 Bmt	5.None	8.
3.3/4 Bmt	6.	9.None

Bsmt Gar # Cars

Wet Basement		
1.Dry	4.	7.
2.Damp	5.	8.
3.Wet	6.	9.

SF Bsmt Living
Fin Bsmt Grade
OPEN-5-CUSTOMIZE

Heat Type **100%**		
0.Uncoded	4.Steam	8.Fl/Wall
1.HWBB	5.FWA	9.No Heat
2.HWCI	6.GravWA	10.Radiabt
3.H Pump	7.Electric	12.

Cool Type **100%**		
1.Refrig	4.W&C Air	7.
2.Evapor	5.	8.
3.H Pump	6.	9.None

Kitchen Style		
1.Modern	4.Obsolete	7.
2.Typical	5.	8.
3.Old Type	6.	9.None

Bath(s) Style		
1.Modern	4.Obsolete	7.
2.Typical	5.	8.
3.Old Type	6.	9.None

Rooms
Bedrooms
Full Baths
Half Baths
Addn Fixtures
Fireplaces

TRIO Software
A Division of Harris Computer Systems

Layout		
1.Typical	4.	7.
2.Inadeq	5.	8.
3.Horrid	6.	9.

Attic		
1.1/4 Fin	4.Full Fin	7.
2.1/2 Fin	5.Fl/Stair	8.
3.3/4 Fin	6.	9.None

Insulation		
1.Full	4.Minimal	7.
2.Heavy	5.Partial	8.
3.Capped	6.	9.None

Unfinished %

Grade & Factor		
1.E Grade	4.B Grade	7.AAA Grad
2.D Grade	5.A Grade	8.SC Grade
3.C Grade	6.AA Grade	9.Same

SQFT (Footprint)

Condition		
1.Poor	4.Avg	7.V G
2.Fair	5.Avg+	8.Exc
3.Avg-	6.Good	9.Same

Phys. % Good
Funct. % Good

Functional Code		
1.Incomp	4.Delap	7.Seasonal
2.O-Built	5.Bsmt	8.
3.Fire	6.2014 ADJ	9.None

Econ. % Good

Economic Code		
0.None	3.No Power	7.
1.Location	4.Generate	8.
2.Encroach	9.None	9.

Entrance Code **0**		
1.Interior	4.Vacant	7.
2.Refusal	5.Estimate	8.
3.Informed	6.	9.

Information Code **0**		
1.Owner	4.Agent	7.
2.Relative	5.Estimate	8.
3.Tenant	6.Other	9.

Date Inspected

Additions, Outbuildings & Improvements

Type	Year	Units	Grade	Cond	Phys.	Funct.	Sound Value
					%	%	
					%	%	
					%	%	
					%	%	
					%	%	
					%	%	
					%	%	
					%	%	
					%	%	
					%	%	

1.One Story Fram
2.Two Story Fram
3.Three Story Fr
4.1 & 1/2 Story
5.1 & 3/4 Story
6.2 & 1/2 Story
21.Open Frame Por
22.Encl Frame Por
23.Frame Garage
24.Frame Shed
25.Frame Bay Wind
26.1SFr Overhang
27.Unfin Basement
28.Unfinished Att
29.Finished Attic